HP LaserJet Enterprise MFP M634
HP LaserJet Enterprise MFP M635
HP LaserJet Enterprise MFP M636

User Guide

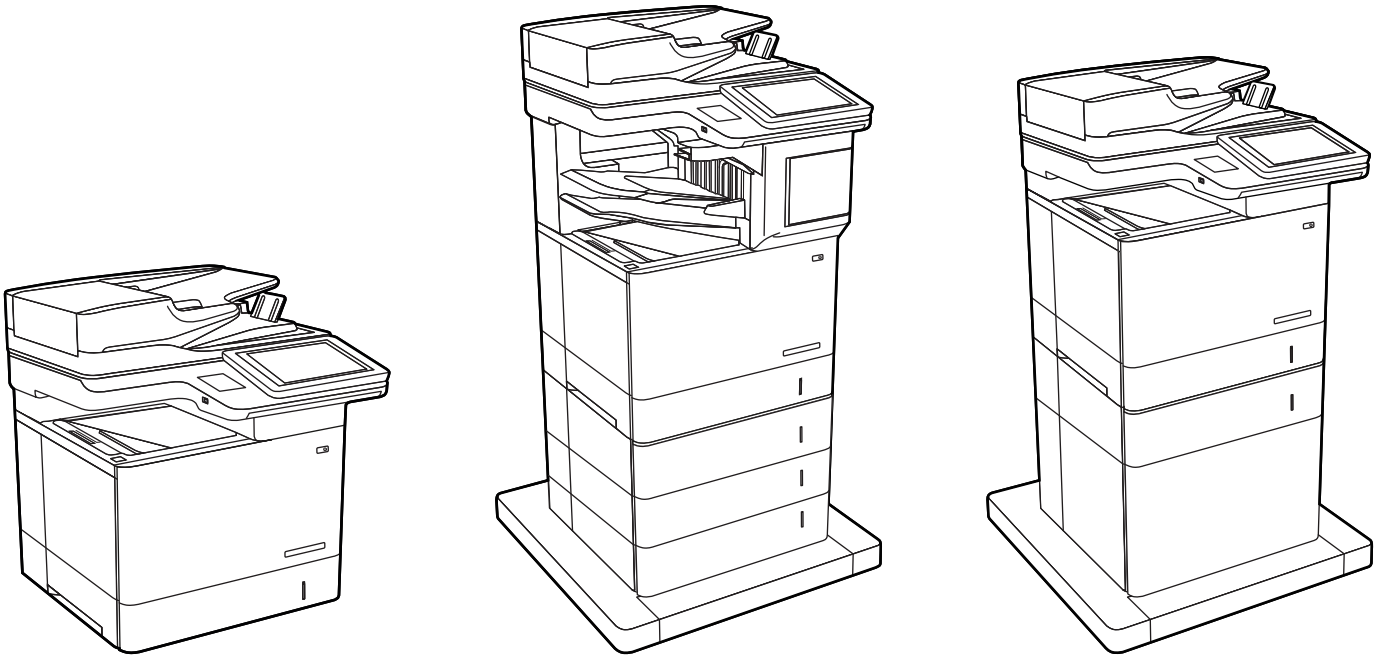

www.hp.com/videos/laserJet
www.hp.com/support/ljM634MFP
www.hp.com/support/ljM635MFP
www.hp.com/support/ljM636MFP

HP LaserJet Enterprise MFP M634, M635, M636 - User Guide

SUMMARY

This guide provides configuration, use, warranty, safety and environmental information.

Legal information

Copyright and License

© Copyright 2021 HP Development Company, L.P.

Reproduction, adaptation, or translation without prior written permission is prohibited, except as allowed under the copyright laws.

The information contained herein is subject to change without notice.

The only warranties for HP products and services are set forth in the express warranty statements accompanying such products and services. Nothing herein should be construed as constituting an additional warranty. HP shall not be liable for technical or editorial errors or omissions contained herein.

Edition 2, 10/2021

Trademark Credits

Adobe®, Adobe Photoshop®, Acrobat®, and PostScript® are trademarks of Adobe Systems Incorporated.

Apple and the Apple logo are trademarks of Apple Inc., registered in the U.S. and other countries.

macOS is a trademark of Apple Inc., registered in the U.S. and other countries.

AirPrint is a trademark of Apple Inc., registered in the U.S. and other countries.

Google™ is a trademark of Google Inc.

Microsoft®, Windows®, and Windows Server® are U.S. registered trademarks of Microsoft Corporation.

UNIX® is a registered trademark of The Open Group.

Table of contents

1 Printer overview 1

Warning icons 1

Printer views 2

Printer front view 2

Printer back view 3

Interface ports 4

Control-panel view 5

Printer specifications 8

Technical specifications 8

Supported operating systems 12

Mobile printing solutions 13

Printer dimensions 14

Power consumption, electrical specifications, and acoustic emissions 17

Operating-environment range 17

Printer hardware setup and software installation 17

2 Paper trays 18

Load paper to Tray 1 (multipurpose tray) 18

Load Tray 1 18

Tray 1 paper orientation 20

Use alternative letterhead mode 22

Load paper to Tray 2 and the 550-sheet trays 22

Load paper to Tray 2 and the 550-sheet trays 22

Tray 2 and the 550-sheet trays paper orientation 24

Use alternative letterhead mode 25

Load paper to the 2,000-sheet high-capacity input tray 26

Load paper to the high-capacity input tray 26

Load and print envelopes 27

Print envelopes from Tray 1 27

Print envelopes from the envelope feeder accessory 28

Envelope orientation 28

Load and print labels 29

Manually feed labels 29

Label orientation 30

Configure the 3-bin stapler/stacker accessory 30

Configure the default staple location 30

Configure the operation mode 31

Configure the HP print driver for the operation mode 32

3 Supplies, accessories, and parts 34

Order supplies, accessories, and parts 34

Ordering 34
Supplies and accessories 34
Maintenance/long-life consumables 36
Customer self-repair parts 36
Configure the HP toner-cartridge-protection supply settings 37
Introduction 37
Enable or disable the Cartridge Policy feature 37
Enable or disable the Cartridge Protection feature 39
Replace the toner cartridges 42
Toner-cartridge information 42
Remove and replace the cartridge 43
Replace the staple cartridge (stapler models only) 46
Remove and replace the staple cartridge 47
4 Print 49
Print tasks (Windows) 49
How to print (Windows) 49
Automatically print on both sides (Windows) 50
Manually print on both sides (Windows) 50
Print multiple pages per sheet (Windows) 51
Select the paper type (Windows) 51
Additional print tasks 52
Print tasks (macOS) 52
How to print (macOS) 52
Automatically print on both sides (macOS) 53
Manually print on both sides (macOS) 53
Print multiple pages per sheet (macOS) 54
Select the paper type (macOS) 54
Additional print tasks 55
Store print jobs on the printer to print later or print privately 55
Introduction 55
Create a stored job (Windows) 55
Create a stored job (macOS) 56
Print a stored job 57
Delete a stored job 57
Information sent to printer for Job Accounting purposes 58
Mobile printing 58
Introduction 58
Wi-Fi, Wi-Fi Direct Print, NFC, and BLE printing 58
HP ePrint via email 59
AirPrint 60
Android embedded printing 60
Print from a USB flash drive 61
Enable the USB port for printing 61
Print USB documents 62
5 Copy 63

Make a copy 63
Copy on both sides (duplex) 65
Additional copy tasks 67
6 Scan 68
Set up Scan to Email 68
Introduction 68
Before you begin 68
Step one: Access the HP Embedded Web Server (EWS) 69
Step two: Configure the Network Identification settings 70
Step three: Configure the Send to Email feature 70
Step four: Configure the Quick Sets (optional) 80
Step five: Set up Send to Email to use Office 365 Outlook (optional) 80
Set up Scan to Network Folder 83
Introduction 83
Before you begin 83
Step one: Access the HP Embedded Web Server (EWS) 83
Step two: Set up Scan to Network Folder 84
Set up Scan to SharePoint 93
Introduction 93
Before you begin 93
Step one: Access the HP Embedded Web Server (EWS) 93
Step two: Enable Scan to SharePoint and create a Scan to SharePoint Quick Set 94
Scan a file directly to a SharePoint site 96
Quick Set scan settings and options for Scan to SharePoint 97
Set up Scan to USB Drive 98
Introduction 99
Step one: Access the HP Embedded Web Server (EWS) 99
Step two: Enable Scan to USB Drive 99
Step three: Configure the Quick Sets (optional) 100
Default scan settings for Scan to USB Drive setup 101
Default file settings for Save to USB setup 101
Scan to email 102
Introduction 102
Scan to email 102
Scan to network folder 105
Introduction 105
Scan to network folder 105
Scan to SharePoint 107
Introduction 107
Scan to SharePoint 107
Scan to USB drive 109
Introduction 109
Scan to USB drive 109
Use HP JetAdvantage business solutions 111

Additional scan tasks 111

7 Fax 113

Set up fax 113
Introduction 113
Set up fax by using the printer control panel 113

Change fax configurations 114
Fax dialing settings 114
General fax send settings 115
Fax receive settings 116

Send a fax 117

Create a fax printing schedule 119

Block incoming faxes 120
Create a list of blocked fax numbers 120
Delete numbers from the list of blocked fax numbers 120

Additional fax tasks 120

8 Manage the printer 122

Advanced configuration with the HP Embedded Web Server (EWS) 122
Introduction 122
How to access the HP Embedded Web Server (EWS) 123
HP Embedded Web Server features 124

Configure IP network settings 132
Printer sharing disclaimer 132
View or change network settings 132
Rename the printer on a network 133
Manually configure IPv4 TCP/IP parameters from the control panel 133
Manually configure IPv6 TCP/IP parameters from the control panel 134
Link speed and duplex settings 134

Printer security features 135
Introduction 135
Security statements 135
Assign an administrator password 136
IP Security 137
Encryption support: HP High Performance Secure Hard Disks 137
Lock the formatter 137

Encryption support: HP High Performance Secure Hard Disks 137

Energy-conservation settings 137
Print with EconoMode 137
Set the sleep timer and configure the printer to use 1 watt or less of power 138
Set the sleep schedule 138

HP Web Jetadmin 139

Software and firmware updates 139

9 Solve problems 140

Customer support 140

Control panel help system 140
Reset factory settings 141
Introduction 141
Method one: Reset factory settings from the printer control panel 141
Method two: Reset factory settings from the HP Embedded Web Server (network-connected printers only) 142
A “Cartridge is low” or “Cartridge is very low” message displays on the printer control panel or EWS 142
Change the “Very Low” settings 142
Order supplies 143
Printer does not pick up paper or misfeeds 143
Introduction 143
The printer does not pick up paper 143
The printer picks up multiple sheets of paper 146
The document feeder jams, skews, or picks up multiple sheets of paper 149
Clear paper jams 150
Introduction 150
Paper jam locations 150
Auto-navigation for clearing paper jams 151
Experiencing frequent or recurring paper jams? 152
31.13.yz Clear paper jams in the document feeder 152
13.B2.D1 jam error in tray 1 155
13.B2.D2 jam error in tray 2 159
13.A3 jam error in tray 3 163
13.A4 jam error in tray 4 167
13.A4 jam error in high-capacity input (HCI) tray 4 172
13.A5 jam error in tray 5 176
13.B2 jam error in right door 181
13.B4 jam error in right door (fuser) 183
13.B9 jam error in right door (fuser) 185
13.D3 jam error in right door (duplexer) 188
13.E1 jam error in output bin 190
13.60 jam error in stapler/stacker 192
13.83 jam error in stapler/stacker 194
66.80.yz Staple jam/Stapler malfunction 197
Resolving mono print quality problems 200
Introduction 200
Troubleshoot print quality 200
Improve copy image quality 213
Check the scanner glass for dirt and smudges 213
Calibrate the scanner 215
Check the paper settings 215
Check the image-adjustment settings 215
Optimize copy quality for text or pictures 216
Edge-to-edge copying 216
Improve scan image quality 216
Check the scanner glass for dirt and smudges 217
Check the resolution settings 218

Check the color settings 219
Check the image-adjustment settings 219
Optimize scan quality for text or pictures 220
Check the output-quality settings 220
Improve fax image quality 221
Check the scanner glass for dirt and smudges 221
Check the send-fax resolution settings 223
Check the image-adjustment settings 223
Optimize fax quality for text or pictures 223
Check the error-correction setting 224
Check the fit-to-page setting 224
Send to a different fax machine 224
Check the sender's fax machine 225
Solve wired network problems 225
Introduction 225
Poor physical connection 225
The computer is unable to communicate with the printer 225
The printer is using incorrect link and duplex settings for the network 226
New software programs might be causing compatibility problems 226
The computer or workstation might be set up incorrectly 226
The printer is disabled, or other network settings are incorrect 226
Solve wireless network problems 226
Introduction 226
Wireless connectivity checklist 227
The printer does not print after the wireless configuration completes 227
The printer does not print, and the computer has a third-party firewall installed 228
The wireless connection does not work after moving the wireless router or printer 228
Cannot connect more computers to the wireless printer 228
The wireless printer loses communication when connected to a VPN 228
The network does not appear in the wireless networks list 228
The wireless network is not functioning 229
Reduce interference on a wireless network 229
Solve fax problems 229
Checklist for solving fax problems 229
General fax problems 231
Index 233

1 Printer overview

Review the location of features on the printer, the physical and technical specifications of the printer, and where to locate setup information.

The following information is correct at the time of publication. For current information, see www.hp.com/support/ljM634MFP, www.hp.com/support/ljM635MFP, or www.hp.com/support/ljM636MFP

For more information:

HP's all-inclusive help for the printer includes the following information:

- Install and configure
- Learn and use
- Solve problems
- Download software and firmware updates
- Join support forums
- Find warranty and regulatory information

Warning icons

Use caution if you see a warning icon on your HP printer, as indicated in the icon definitions.

Figure 1-1 **Caution: Electric shock**

Figure 1-2 **Caution: Hot surface**

Figure 1-3 **Caution: Keep body parts away from moving parts**

Figure 1-4 **Caution: Sharp edge in close proximity**

Figure 1-5 **Warning**

Printer views

Identify certain parts of the printer and the control panel.

Printer front view

Locate features on the front of the printer.

Figure 1-6 **Printer front view components**

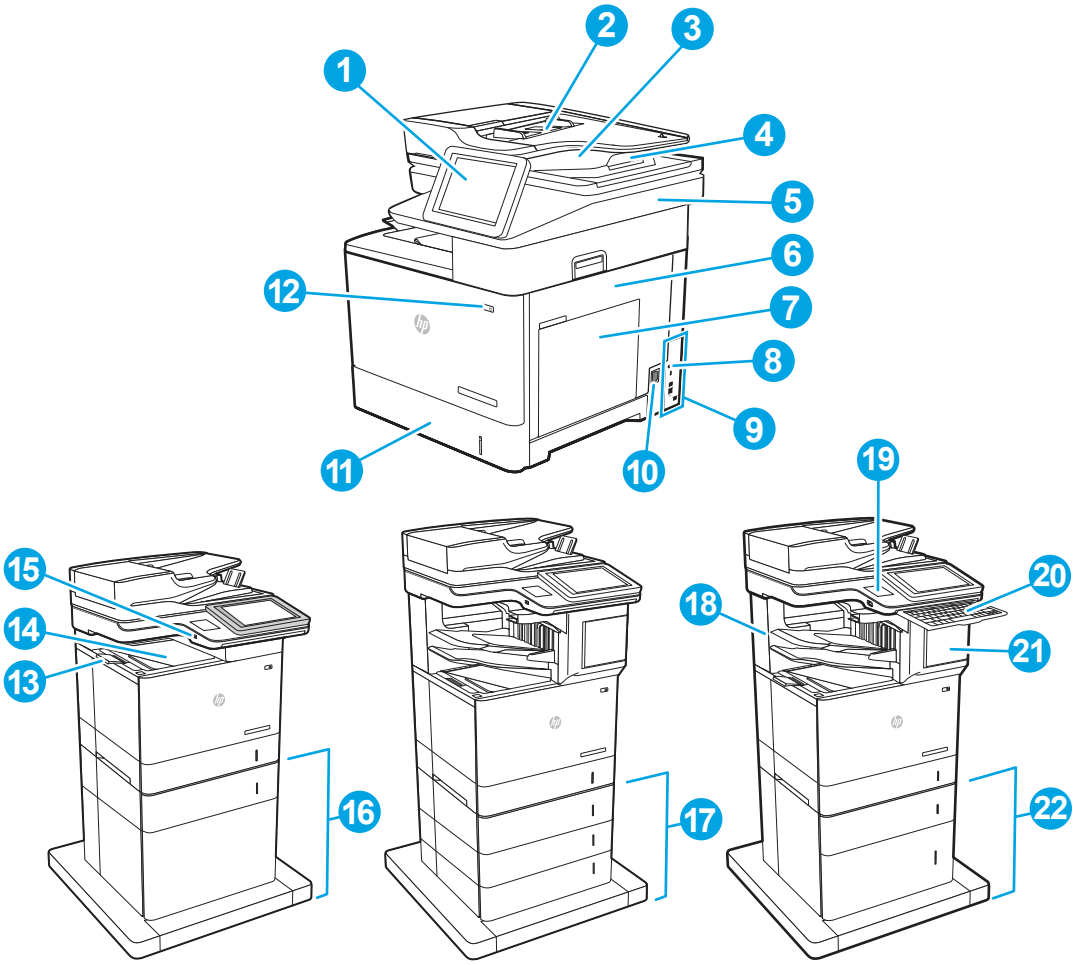

Number	Description
1	Control panel with color touchscreen display (tilts up for easier viewing)
2	Document-feeder input tray
3	Document-feeder output bin
4	Document-feeder output extension (extend this when scanning longer pages, such as legal paper)
5	Scanner assembly
6	Right door (access for clearing jams)

Number	Description
7	Tray 1 (multipurpose tray)
8	Formatter (contains the interface ports)
9	Slot for a cable-type security lock
10	Power connection
11	Tray 2
12	On/off button
13	Walk-up USB port
14	Output bin
15	Output bin extension
16	1 x 550-sheet paper feeder with stand (included with the M635fht; optional for the M634dn, M634h, M634z M635h, M635z, M636fh, and M636z)
17	3 x 550-sheet paper feeder with stand (included with the M634z; optional for the M634dn, M634h, M635fht, M635h, M635z, M636fh, and M636z)
18	HP Stapling Mailbox (included with the M631z, M632z, and M633z)
19	Hardware integration pocket (for connecting accessories and third-party devices)
20	Keyboard (M634h, M635z, and M636z only. Pull the keyboard straight out to use it.) CAUTION: Close the keyboard when it is not in use.
21	Stapler door (included with the M634z, M635z, and M636z)
22	1x550-sheet tray and 2,000-sheet high-capacity input tray (included with the M635z and M636z; optional for the M634dn, M634h, M634z, M635fht, M635h, and M636fh)

Printer back view

Locate features on the back of the printer.

Figure 1-7 Printer rear view components

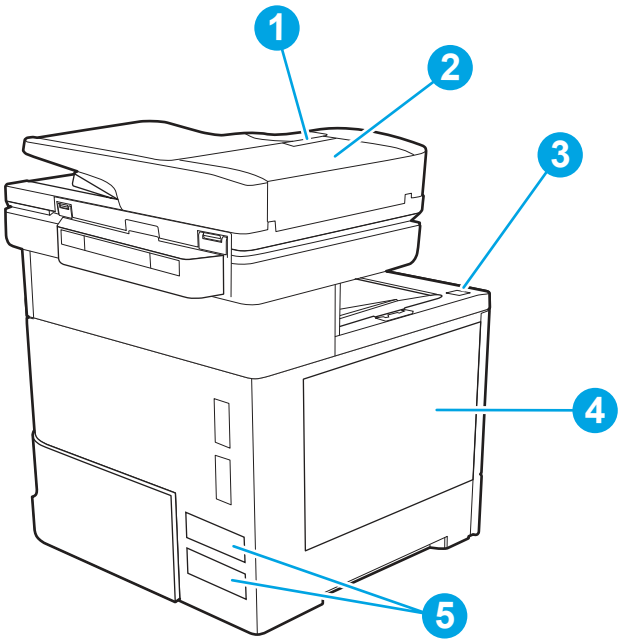

Number	Description
1	Document feeder cover release latch
2	Document-feeder cover (access for clearing jams)
3	Cartridge door release button
4	Cartridge door (access to the toner cartridge)
5	Serial number and product number label

Interface ports

Locate the interface ports on the printer formatter.

Figure 1-8 Interface ports

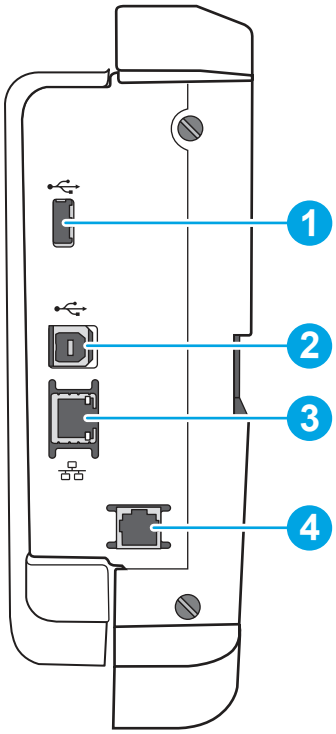

Number	Description
1	USB port for connecting external USB devices (this port might be covered) For easy-access USB printing, use the USB port near the control panel.
2	Hi-Speed USB 2.0 printing port
3	Local area network (LAN) Ethernet 10/100/1000 Ethernet network port
4	Fax port (fax models only)

Control-panel view

Locate features on the printer control panel.

The Home screen provides access to the printer features and indicates the current status of the printer.

Return to the Home screen at any time by touching the Home button on the left side of the printer control panel, or touch the Home button in the upper-left corner of most screens.

NOTE: For more information about the printer-control-panel features, go to www.hp.com/support/ljM634MFP, www.hp.com/support/ljM635MFP, or www.hp.com/support/ljM636MFP Select **Manuals**, and then select **General reference**.

NOTE: The features that appear on the Home screen can vary, depending on the printer configuration.

Figure 1-9 Control panel features

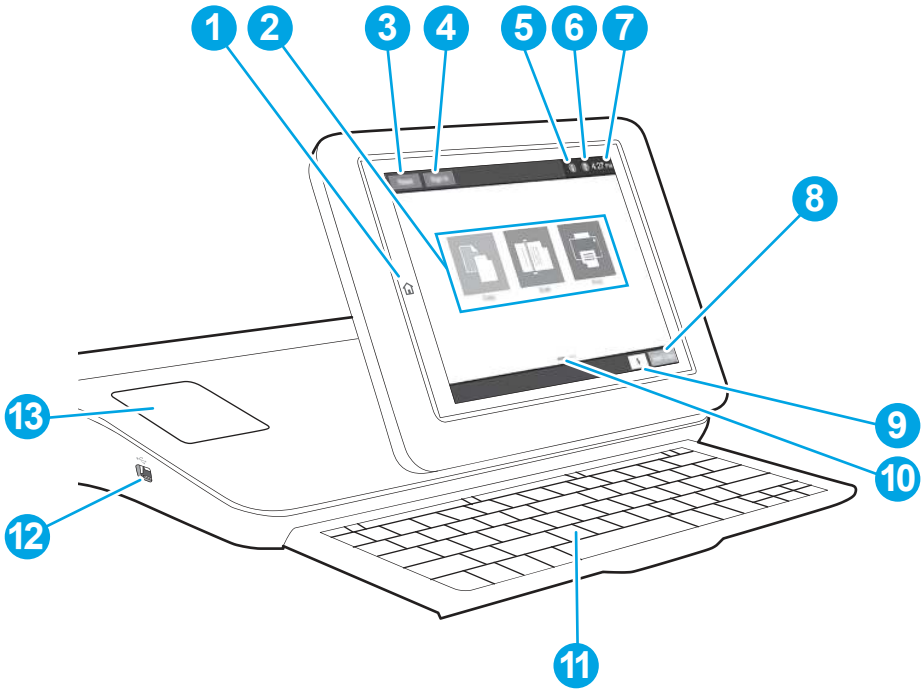

Number	Feature name	Description
1	Home button	Touch the Home button to return to the Home screen.
2	Applications area	Touch any of the icons to open the application. Swipe the screen sideways to access more applications. NOTE: The available applications vary by printer. The administrator can configure which applications appear and the order in which they appear.
3	Reset button	Touch the Reset button to clear changes, release the printer from a paused state, reset the copy count field, display hidden errors, and restore the default settings (including the language and keyboard layout).
4	Sign In or Sign Out button	Touch the Sign In button to access secured features. Touch the Sign Out button to sign out of the printer. The printer restores all options to the default settings. NOTE: This button displays only if the administrator has configured the printer to require permission for access to features.

Number	Feature name	Description
5	Information button	Touch the information button to access a screen that provides access to several types of printer information. Touch the buttons at the bottom of the screen for the following information: • Display Language: Change the language setting for the current user session. • Sleep Mode: Place the printer into sleep mode. • Wi-Fi Direct: View information for how to connect directly to the printer using a phone, tablet, or other device with Wi-Fi. • Wireless: View or change wireless connection settings (for the z model and for the dn and f models only when an optional wireless accessory is installed). • Ethernet: View or change Ethernet connection settings. • HP Web Services: View information to connect and print to the printer using HP Web Services (ePrint). • Fax Number: View the printer fax number (fax models only).
6	Help button	Touch the Help button to open the embedded help system.
7	Current time	Displays the current time
8	Start Copy button	Touch the Start Copy button to start a copy job.
9	Copy count	The copy count indicates the number of copies that the printer is set to make.
10	Home-screen page indicator	Indicates the number of pages on the Home screen or in an application. The current page is highlighted. Swipe the screen sideways to scroll between pages.
11	Keyboard (Flow models only)	Flow models include a physical keyboard. The keys are mapped to a language in the same way the virtual keyboard on the printer touchscreen is mapped. Whenever the keyboard layout for the virtual keyboard changes, the keys on the physical keyboard are remapped to match the new settings. NOTE: In some locations, the printer comes with adhesive keyboard overlays to customize the keys for different languages.
12	Easy-access USB port	Insert a USB flash drive for printing or scanning without a computer or to update the printer firmware. NOTE: An administrator must enable this port before use.
13	Hardware integration pocket (HIP)	For connecting accessory and third-party devices

How to use the touchscreen control panel

Perform the following actions to use the printer touchscreen control panel.

Table 1-1 Touchscreen control panel actions

Action	Description	Example
Touch 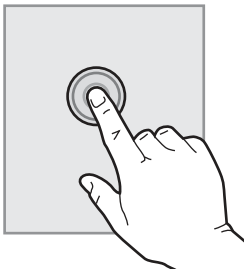	Touch an item on the screen to select that item or open that menu. Also, when scrolling through menus, briefly touch the screen to stop the scrolling.	Touch the Settings icon to open the Settings app.
Swipe 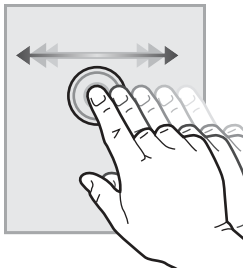	Touch the screen and then move your finger horizontally to scroll the screen sideways.	Swipe until the Settings app displays.
Scroll 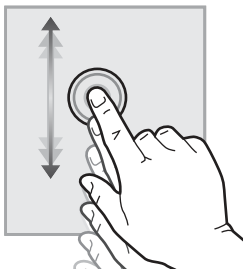	Touch the screen and then move your finger vertically to scroll the screen up and down. When scrolling through menus, briefly touch the screen to stop the scrolling.	Scroll through the Settings app.

Printer specifications

Determine the specifications for your printer model.

Technical specifications

Review the technical specifications for the printer.

See www.hp.com/support/ljM634MFP, www.hp.com/support/ljM635MFP, or www.hp.com/support/ljM636MFP for current information.

Product numbers for each model

- M634dn - #7PS94A
- M634h - # 7PS95A

- M634z - #7PS96A
- M635h - #7PS97A
- M635fht - #7PS98A
- M635z - #7PS99A
- M636fh - #7PT00A
- M636z - #7PT01A

Table 1-2 Paper handling specifications

Paper handling features	M634dn, M635h	M634h, M635fht, M636fh	M634z, M635z, M636z
Tray 1 (100-sheet capacity)	✓	✓	✓
Tray 2 (550-sheet capacity)	✓	✓	✓
1 x 550-sheet paper feeder NOTE: The printer supports as many as six input trays.	Optional	Optional	Optional
1 x 550-sheet paper feeder with stand	Optional	Included with the M635fht, Optional on all others	Optional
1 x 550-sheet feeder plus 2,000- sheet high-capacity feeder	Optional	Optional	Included with the M635z and M636z
3 x 550-sheet paper feeder with stand	Optional	Optional	Included with the M634z
Envelope feeder cassette for printing up to 75 envelopes	Optional	Optional	Optional
900-sheet 3-bin Stapling Mailbox	Not supported	Not supported	✓
Automatic duplex printing	✓	✓	✓

Table 1-3 Connectivity specifications

Connectivity features	M634dn, M635h	M634h, M635fht, M636fh	M634z, M635z, M636z
10/100/1000 Ethernet LAN connection with IPv4 and IPv6	✓	✓	✓
Hi-Speed USB 2.0	✓	✓	✓
Easy-access USB port for printing without a computer and upgrading the firmware	✓	✓	✓
Hardware Integration Pocket for connecting accessory and third-party devices	✓	✓	✓
HP Internal USB Ports	Optional	Optional	Optional
HP Jetdirect 2900nw Print Server Accessory for wireless connectivity	Optional	Optional	Optional

Table 1-3 Connectivity specifications (continued)

Connectivity features	M634dn, M635h	M634h, M635fht, M636fh	M634z, M635z, M636z
HP Jetdirect 3100w BLE/NFC/ Wireless Accessory for printing from mobile devices NOTE: Connected via the Hardware Integration Pocket or the rear host USB port. The HP Jetdirect 3100w BLE/NFC/ Wireless Accessory requires the HP Internal USB ports accessory.	Optional	Optional	Included with the M634z and M636z

Table 1-4 Print specifications

Print features	M634dn, M635h	M634h, M635fht, M636fh	M634z, M635z, M636z
Prints 52 pages per minute (ppm) on A4 and 55 ppm on letter-size paper	M634dn	M634h	M634z
Prints 61 ppm on A4 and 65 ppm on letter-size paper	M635h	M635fht	M635z
Prints 71 ppm on A4 and 75 ppm on letter-size paper	Not supported	M636fh	M636z
Easy-access USB printing (no computer required)	✓	✓	✓
Store jobs in the printer memory to print later or print privately	✓	✓	✓

Table 1-5 Copy and scan specifications

Copy and scan features	M634dn, M635h	M634h, M635fht, M636fh	M634z, M635z, M636z
Copies 52 pages per minute (ppm) on A4 and 55 ppm on letter-size paper*	M634dn	M634h	M634z
Copies 61 ppm on A4 and 65 ppm on letter-size paper*	M635h	M635fht	M635z
Copies 71 ppm on A4 and 75 ppm on letter-size paper	Not supported	M636fh	M636z
Scans at 75 images per minute (ipm) (monochrome or color)*	✓	Included with the M635fht, M636fh	Included with the M634z
Scans at 120 ipm (monochrome and color)	Not supported	Included with the M634h	Included with the M635z and M636z
Easy-access USB copying and scanning (no computer required)	✓	✓	✓
150-page document feeder with electronic duplex copying and scanning	✓	✓	✓
HP EveryPage Technologies including ultrasonic multi-feed detection	Not supported	Included with the M634h	Included with the M635z and M636z
Embedded optical character recognition (OCR) provides the ability to convert printed pages into text that can be edited or searched using a computer	Not supported	Included with the M634h	Included with the M635z and M636z

Table 1-5 Copy and scan specifications (continued)

Copy and scan features	M634dn, M635h	M634h, M635fht, M636fh	M634z, M635z, M636z
SMART Label feature provides paper-edge detection for automatic page cropping	Not supported	Included with the M634h	Included with the M635z and M636z
Automatic page orientation for pages that have at least 100 characters of text	Not supported	Included with the M634h	Included with the M635z and M636z
Automatic tone adjustment sets contrast, brightness, and background removal for each page	Not supported	Included with the M634h	Included with the M635z and M636z

*Copy and scan speeds are subject to change. For the most current information, go to www.hp.com/support/ljM634MFP, www.hp.com/support/ljM635MFP, or www.hp.com/support/ljM636MFP

Table 1-6 Digital Send specifications

Digital Send	M634dn, M635h	M634h, M635fht, M636fh	M634z, M635z, M636z
Send documents to email, USB, and shared folders on a network	✓	✓	✓
Send documents to SharePoint®	Not supported	Included with the M634h	Included with the M635z and M636z

Table 1-7 Memory specifications

Memory features	M634dn, M635h	M634h, M635fht, M636fh	M634z, M635z, M636z
1.75 GB base memory, expandable to 2.5 GB	✓	✓	Not supported
2.25 GB base memory, expandable to 3 GB	Not supported	Included with the M634h	Included with the M635z and M636z

Table 1-8 Mass storage specifications

Mass storage features	M634dn, M635h	M634h, M635fht, M636fh	M634z, M635z, M636z
Mass storage: 16 GB embedded Multi-Media Controller (eMMC)	M634dn	Not supported	Not supported
Mass storage: 500 GB HP High- Performance Secure Hard Disk	Included with the M635h; optional for the M634dn	✓	✓

Table 1-9 Other specifications

Other features	M634dn, M635h	M634h, M635fht, M636fh	M634z, M635z, M636z
Touchscreen control panel	✓	✓	✓
Retractable keyboard	Not supported	Included with the M634h	Included with the M635z and M636z

Table 1-9 Other specifications (continued)

Other features	M634dn, M635h	M634h, M635fht, M636fh	M634z, M635z, M636z
Security: HP Trusted Platform Module for encrypting all data that passes through the printer	✓	✓	✓
Fax	Optional	Included with M635fht, M636fh; optional for the M634h	✓

Supported operating systems

The following information applies to the printer-specific Windows PCL 6 and HP print drivers for macOS and to the software installer.

Linux: For information and print drivers for Linux, go to www.hp.com/go/linuxprinting.

UNIX: For information and print drivers for UNIX®, go to www.hp.com/go/unixmodelscripts.

The following information applies to the printer-specific HP PCL 6 print drivers, and HP print drivers for macOS.

Windows: Download HP Easy Start from 123.hp.com to install the HP print driver. Or, go to the printer-support website for this printer: www.hp.com/support/ljM634MFP, www.hp.com/support/ljM635MFP, or www.hp.com/support/ljM636MFP to download the print driver or the software installer to install the HP print driver.

macOS: Mac computers are supported with this printer. Download HP Easy Start from either 123.hp.com or from the Printer Support page, and then use HP Easy Start to install the HP print driver.

1. Go to 123.hp.com.
2. Follow the steps provided to download the printer software.

Table 1-10 Supported operating systems and print drivers

Operating system	Print driver installed (from the software on the web)
Windows 8, 32-bit and 64-bit	The PCL 6 printer-specific print driver is available for download from the printer-support website. Download the driver, and then use the Microsoft Add Printer tool to install it.
Windows 8.1, 32-bit and 64-bit	The PCL 6 printer-specific print driver is available for download from the printer-support website. Download the driver, and then use the Microsoft Add Printer tool to install it.
Windows 10, 32-bit and 64-bit	The PCL 6 printer-specific print driver is available for download from the printer-support website. Download the driver, and then use the Microsoft Add Printer tool to install it.
Windows Server 2008 R2, SP 1, 64-bit	The PCL 6 printer-specific print driver is available for download from the printer-support website. Download the driver, and then use the Microsoft Add Printer tool to install it.
Windows Server 2012, 64-bit	The PCL 6 printer-specific print driver is available for download from the printer-support website. Download the driver, and then use the Microsoft Add Printer tool to install it.

Table 1-10 Supported operating systems and print drivers (continued)

Operating system	Print driver installed (from the software on the web)
Windows Server 2012 R2, 64-bit	The PCL 6 printer-specific print driver is available for download from the printer-support website. Download the driver, and then use the Microsoft Add Printer tool to install it.
Windows Server 2016, 64-bit	The PCL 6 printer-specific print driver is available for download from the printer-support website. Download the driver, and then use the Microsoft Add Printer tool to install it.
Windows Server 2019, 64-bit	The PCL 6 printer-specific print driver is available for download from the printer-support website. Download the driver, and then use the Microsoft Add Printer tool to install it.
macOS 10.13 High Sierra, macOS 10.14 Mojave, macOS 10.15 Catalina	Download HP Easy Start from 123.hp.com, and then use it to install the print driver.

NOTE: Supported operating systems can change. For a current list of supported operating systems, go to www.hp.com/support/ljM634MFP, www.hp.com/support/ljM635MFP, or www.hp.com/support/ljM636MFP for HP's all-inclusive help for the printer.

NOTE: For details on client and server operating systems and for HP UPD driver support for this printer, go to www.hp.com/go/upd. Under **Additional information**, click the links.

Table 1-11 Minimum system requirements

Windows	macOS
• Internet connection • Dedicated USB 1.1 or 2.0 connection or a network connection • 2 GB of available hard-disk space • 1 GB RAM (32-bit) or 2 GB RAM (64-bit)	• Internet connection • Dedicated USB 1.1 or 2.0 connection or a network connection • 1.5 GB of available hard-disk space

NOTE: The Windows software installer installs the HP Smart Device Agent Base service. The file size is approximately 100 kb. Its only function is to check for printers connected via USB hourly. No data is collected. If a USB printer is found, it then tries to locate a JetAdvantage Management Connector (JAMc) instance on the network. If a JAMc is found, the HP Smart Device Agent Base is securely upgraded to a full Smart Device Agent from JAMc, which will then allow printed pages to be accounted for in a Managed Print Services (MPS) account. The driver-only web packs downloaded from hp.com for the printer and installed through the Add Printer wizard do not install this service.

To uninstall the service, open the **Control Panel**, select **Programs** or **Programs and Features**, and then select **Add/Remove Programs** or **Uninstall a Program** to remove the service. The file name is **HPSmartDeviceAgentBase**.

Mobile printing solutions

HP offers multiple mobile and ePrint solutions to enable easy printing to an HP printer from a laptop, tablet, smartphone, or other mobile device.

To see the full list and to determine the best choice, go to www.hp.com/go/MobilePrinting.

NOTE: Update the printer firmware to ensure all mobile printing and ePrint capabilities are supported.

- Wi-Fi Direct (wireless models only, with HP Jetdirect 3000w NFC Wireless accessory installed)
- HP ePrint via email (Requires HP Web Services to be enabled and the printer to be registered with HP Connected)
- HP Smart app
- Google Cloud Print
- AirPrint
- Android Printing

Printer dimensions

Review the dimensions for the printer and accessories.

Table 1-12 Dimensions for base models (M634dn, M634h, M635h, M636fh)

Measurement	Printer fully closed	Printer fully opened
Height	640 mm (25.2 in)	865 mm (34.1 in)
Depth	558 mm (22 in)	805 mm (31.7 in)
Width	512 mm (20.15 in)	1,030 mm (40.5 in)
Weight (with toner cartridge)	33.2 kg (73.2 lb)	33.2 kg (73.2 lb)

Table 1-13 Dimensions for M634z

Measurement	Printer fully closed	Printer fully opened
Height	1,234 mm (48.6 in)	1,500 mm (59.1 in)
Depth	658 mm (25.9 in)	890 mm (35 in)
Width	661 mm (26 in)	1,030 mm (40.5 in)
Weight (with toner cartridge)	62.5 kg (137.8 lb)	62.5 kg (137.8 lb)

Table 1-14 Dimensions for M635fht

Measurement	Printer fully closed	Printer fully opened
Height	1,094 mm (43.2 in)	1,365 mm (53.7 in)
Depth	660 mm (26 in)	890 mm (35 in)
Width	665 mm (26.15 in)	1,030 mm (40.5 in)
Weight (with toner cartridge)	52.5 kg (115.8 lb)	52.5 kg (115.8 lb)

Table 1-15 Dimensions for M635z, M636z

Measurement	Printer fully closed	Printer fully opened
Height	1,234 mm (48.5 in)	1,500 mm (59.1 in)
Depth	658 mm (25.9 in)	890 mm (35 in)
Width	661 mm (26 in)	1,030 mm (40.5 in)
Weight (with toner cartridge)	64.3 kg (141.8 lb)	64.3 kg (141.8 lb)

Table 1-16 Dimensions for the 1 x 550-sheet paper feeder

Measurement	Tray fully closed	Tray fully opened
Height	148 mm (5.8 in)	148 mm (5.8 in)
Depth	558 mm (22 in)	869 mm (34.2 in)
Width	512 mm (20.15 in)	617 mm (24.3 in)
Weight (with toner cartridge)	6.8 kg (15 lb)	6.8 kg (15 lb)

Table 1-17 Dimensions for the printer with a 1 x 550-sheet paper feeder

Measurement	Printer fully closed	Printer fully opened
Height	766 mm (30.15 in)	1,010 mm (39.8 in)
Depth	558 mm (22 in)	890 mm (35 in)
Width	512 mm (20.15 in)	1,030 mm (40.5 in)
Weight	40 kg (88.2 lb)	40 kg (88.2 lb)

Table 1-18 Dimensions for the 1 x 550-sheet feeder with printer stand

Measurement	Accessory fully closed	Accessory fully opened
Height	478 mm (18.8 in)	478 mm (18.8 in)
Depth	658 mm (25.9 in)	1,050 mm (41.3 in)
Width	660 mm (26 in)	980 mm (38.6 in)
Weight	19.28 kg (42.5 lb)	19.28 kg (42.5 lb)

Table 1-19 Dimensions for the printer with a 1 x 550-sheet feeder with printer stand

Measurement	Printer fully closed	Printer fully opened
Height	1,094 mm (43.2 in)	1,365 mm (53.7 in)
Depth	600 mm (26 in)	890 mm (35 in)
Width	665 mm (26.15 in)	1,030 mm (40.5 in)
Weight	52.5 kg (115.8 lb)	52.5 kg (115.8 lb)

Table 1-20 Dimensions for the 1 x 550-sheet feeder and 2,000-sheet HCI tray with stand

Measurement	Accessory fully closed	Accessory fully opened
Height	478 mm (18.8 in)	478 mm (18.8 in)
Depth	658 mm (25.9 in)	975 mm (38.4 in)
Width	660 mm (26 in)	980 mm (38.6 in)
Weight	24.5 kg (54 lb)	24.5 kg (54 lb)

Table 1-21 Dimensions for the printer with a 1 x 550-sheet feeder and 2,000-sheet HCI tray with stand

Measurement	Printer fully closed	Printer fully opened
Height	1,090 mm (42.9 in)	1,360 mm (53.5 in)
Depth	658 mm (25.9 in)	890 mm (35 in)
Width	660 mm (26 in)	1,030 mm (40.5)
Weight	57.7 kg (127.2 lb)	57.7 kg (127.2 lb)

Table 1-22 Dimensions for the envelope feeder cassette

Measurement	Accessory fully closed	Accessory fully opened
Height	148 mm (5.8 in)	148 mm (5.8 in)
Depth	558 mm (22 in)	869 mm (34.2 in)
Width	512 mm (20.15 in)	617 mm (24.3 in)
Weight	6.9 kg (15.3 lb)	6.9 kg (15.3 lb)

Table 1-23 Dimensions for the printer with an envelope feeder

Measurement	Printer fully closed	Printer fully opened
Height	766 mm (30.15 in)	1,010 mm (39.8 in)
Depth	558 mm (22 in)	890 mm (35 in)
Width	512 mm (20.15 in)	1,030 mm (40.5 in)
Weight	39.6 kg (87.3)	39.6 kg (87.3)

Table 1-24 Dimensions for the printer with an HP Stapling Mailbox

Measurement	Printer fully closed	Printer fully opened
Height	779 mm (30.7 in)	890 mm (35 in)
Depth	558 mm (22 in)	890 mm (35 in)
Width	512 mm (20.15 in)	1,030 mm (40.5 in)
Weight	39.8 kg (87.7)	39.8 kg (87.7)

Power consumption, electrical specifications, and acoustic emissions

In order to operate properly, the printer must be in an environment that meets certain power specifications.

See www.hp.com/support/ljM634MFP, www.hp.com/support/ljM635MFP, or www.hp.com/support/ljM636MFP for current information.

⚠ **CAUTION:** Power requirements are based on the country/region where the printer is sold. Do not convert operating voltages. This will damage the printer and void the printer warranty.

Operating-environment range

Review the operating-environment specifications.

Table 1-25 **Operating-environment specifications**

Environment	Recommended	Storage
Temperature	17° to 25°C (62.6° to 77°F)	10 to 32.5°C (50° to 90°F)
Relative humidity	30% to 70% relative humidity (RH)	10% to 80% RH

Printer hardware setup and software installation

For basic setup instructions, see the Hardware Installation Guide that came with the printer. For additional instructions, go to HP support on the web.

Go to www.hp.com/support/ljM634MFP, www.hp.com/support/ljM635MFP, or www.hp.com/support/ljM636MFP for HP's all-inclusive help for the printer, which includes the following information:

- Install and configure
- Learn and use
- Solve problems
- Download software and firmware updates
- Join support forums
- Find warranty and regulatory information
- Find instructions about how to use the Microsoft Add Printer tool

2 Paper trays

Discover how to load and use the paper trays, including how to load special items such as envelopes and labels.

The following information is correct at the time of publication. For current information, see www.hp.com/support/ljM634MFP, www.hp.com/support/ljM635MFP, or www.hp.com/support/ljM636MFP.

For more information:

HP's all-inclusive help for the printer includes the following information:

- Install and configure
- Learn and use
- Solve problems
- Download software and firmware updates
- Join support forums
- Find warranty and regulatory information

Use caution when loading the paper trays.

⚠ **CAUTION:** Do not extend more than one paper tray at a time.

Do not use paper tray as a step.

All trays must be closed while relocating/moving product.

Keep hands out of paper trays or drawers when closing.

If the printer has a keyboard, close keyboard tray when not in use.

Load paper to Tray 1 (multipurpose tray)

The following information describes how to load paper in Tray 1.

⚠ **CAUTION:** To avoid jams, never add or remove paper from Tray 1 during printing.

Load Tray 1

This tray holds up to 100 sheets of 75 g/m2 (20 lb) paper or 10 envelopes.

⚠ **CAUTION:** To avoid jams, never add or remove paper from Tray 1 during printing.

1. Open Tray 1.

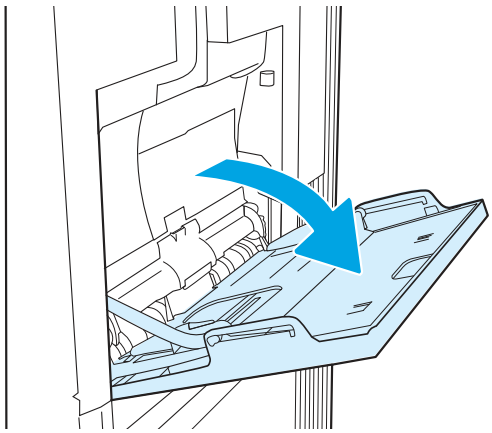

2. Pull out the tray extension to support the paper.

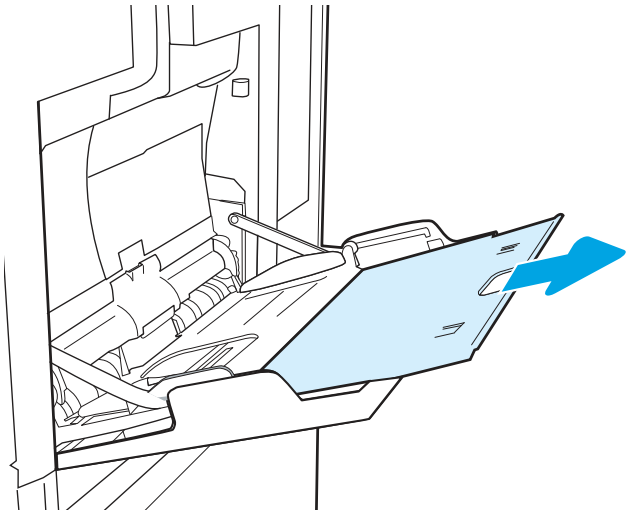

3. Use the blue adjustment latch to spread the paper guides to the correct size, and then load paper in the tray. For information about how to orient the paper, see Tray 1 paper orientation on page 20

   Make sure that the paper fits under the fill line on the paper guides.

   NOTE: The maximum stack height is 10 mm (0.4 in), or approximately 100 sheets of 75 g/m2 (20 lb) paper.

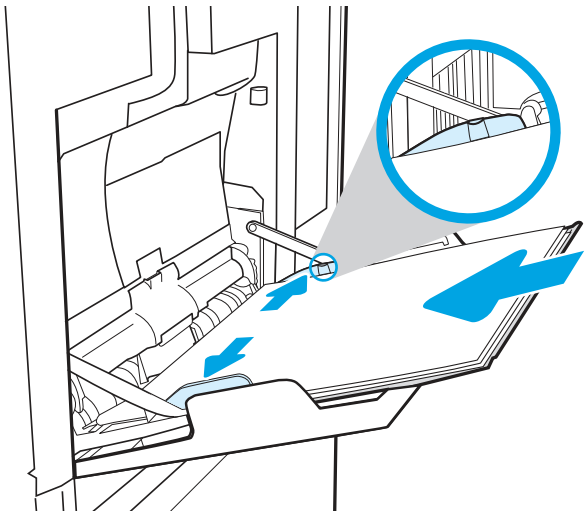

4. . Using the blue adjustment latch, adjust the side guides so that they lightly touch the paper stack, but do not bend it.

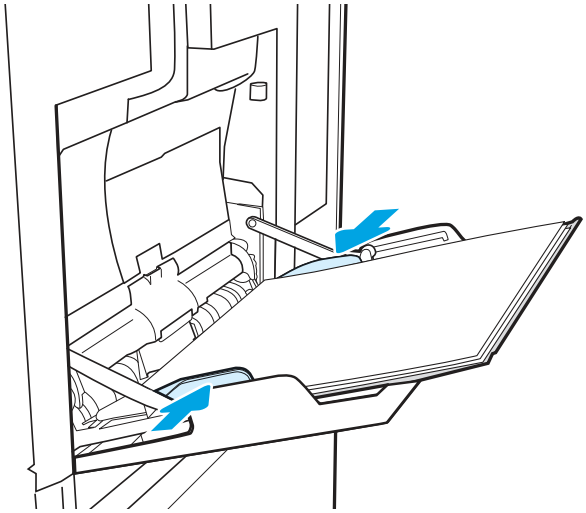

Tray 1 paper orientation

Review the proper orientation for loading paper.

Table 2-1 **Tray 1 paper orientation**

Paper type	Image orientation	Duplex mode	Paper size	How to load paper
Letterhead or preprinted	Portrait	1-sided printing	Letter, Legal, Executive, Statement, Oficio (8.5 x 13), 3 x 5, 4 x 6, 5 x 7, 5 x 8, A4, A5, A6, RA4, B5 (JIS), B6 (JIS), L (90 x 130 mm), 10 x 15 cm, Oficio (216 x 340), 16K 195 x 270 mm, 16K 184 x 260 mm, 16K 197 x 273 mm, Japanese Postcard (Postcard (JIS)), Double Japan Postcard Rotated (Double Postcard (JIS))	Face-down Bottom edge leading into the printer 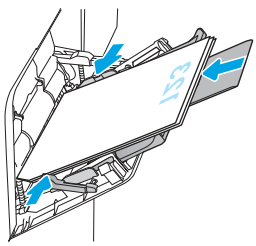
Letterhead or preprinted	Portrait	Automatic 2-sided printing or with Alternative Letterhead Mode enabled	Letter, Legal, Executive, Oficio (8.5 x 13), A4, A5, RA4, B5 (JIS), Oficio (216 x 340), 16K 195 x 270 mm, 16K 184 x 260 mm, 16K 197 x 273 mm	Face-up Top edge leading into the printer 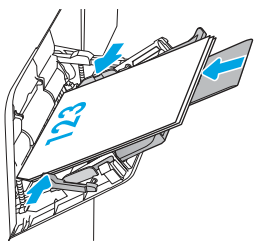

Table 2-1 Tray 1 paper orientation (continued)

Paper type	Image orientation	Duplex mode	Paper size	How to load paper
Letterhead or preprinted	Landscape	1-sided printing	Letter, Legal, Executive, Statement, Oficio (8.5 x 13), 3 x 5, 4 x 6, 5 x 7, 5 x 8, A4, A5, A6, RA4, B5 (JIS), B6 (JIS), L (90 x 130 mm), 10 x 15 cm, Oficio (216 x 340), 16K 195 x 270 mm, 16K 184 x 260 mm, 16K 197 x 273 mm, Japanese Postcard (Postcard (JIS)), Double Japan Postcard Rotated (Double Postcard (JIS))	Face-down Top edge toward the front of the printer 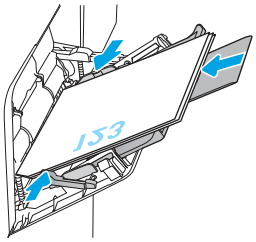
Letterhead or preprinted	Landscape	Automatic 2-sided printing or with Alternative Letterhead Mode enabled	Letter, Legal, Executive, Oficio (8.5 x 13), A4, A5, RA4, B5 (JIS), Oficio (216 x 340), 16K 195 x 270 mm, 16K 184 x 260 mm, 16K 197 x 273 mm	Face-up Top edge toward the front of the printer 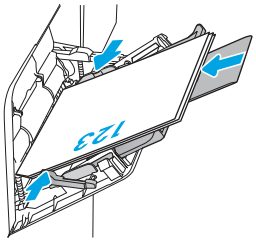
Prepunched	Portrait and landscape	1-sided printing	Letter, Legal, Executive, Statement, Oficio (8.5 x 13), 3 x 5, 4 x 6, 5 x 7, 5 x 8, A4, A5, A6, RA4, B5 (JIS), B6 (JIS), L (90 x 130 mm), 10 x 15 cm, Oficio (216 x 340), 16K 195 x 270 mm, 16K 184 x 260 mm, 16K 197 x 273 mm, Japanese Postcard (Postcard (JIS)), Double Japan Postcard Rotated (Double Postcard (JIS))	Holes toward the front of the printer 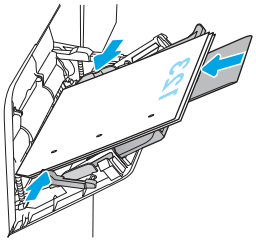
Prepunched	Portrait and landscape	Automatic 2-sided printing or with Alternative Letterhead Mode enabled	Letter, Legal, Executive, Oficio (8.5 x 13), A4, A5, RA4, B5 (JIS), Oficio (216 x 340), 16K 195 x 270 mm, 16K 184 x 260 mm, 16K 197 x 273 mm	Holes toward the front of the printer 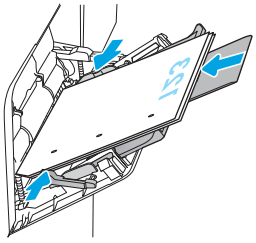

Use alternative letterhead mode

Use the Alternative Letterhead Mode feature to load letterhead or preprinted paper into the tray the same way for all jobs, whether printing to one side of the sheet of paper or to both sides. When using this mode, load paper as for automatic duplex printing.

Enable Alternative Letterhead Mode by using the printer control-panel menus

Use the Settings menu to set the Alternative Letterhead Mode setting.

1. From the Home screen on the printer control panel, navigate to and open the Settings menu.
2. Open the following menus:
   a. Copy/Print or Print
   b. Manage Trays
   c. Alternative Letterhead Mode
3. Select On.

Load paper to Tray 2 and the 550-sheet trays

The following information describes how to load paper into Tray 2 and the optional 550-sheet trays.

NOTE: The procedure to load paper for the 550-sheet trays is the same as for Tray 2. Only Tray 2 is shown here.

Load paper to Tray 2 and the 550-sheet trays

These trays hold up to 550 sheets of 75 g/m2 (20 lb) paper.

1.. Open the tray.

NOTE: Do not open this tray while it is in use.

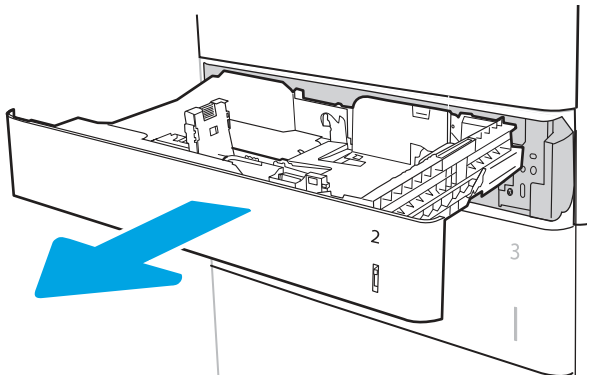

2. Adjust the paper-width guides by squeezing the blue adjustment latches and sliding the guides to the size of the paper being used.

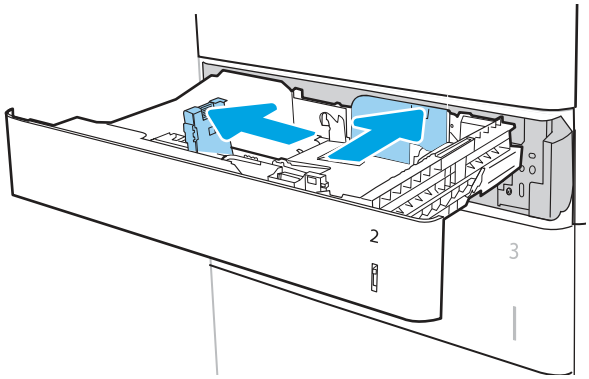

3. Load paper into the tray. Check the paper to verify the guides lightly touch the stack, but do not bend it. For information about how to orient the paper, see Tray 2 and the 550-sheet trays paper orientation on page 24.

NOTE: To prevent jams, adjust the paper guides to the correct size and do not overfill the tray. Be sure that the top of the stack is below the tray full indicator.

NOTE: To prevent jams, do not overfill the tray. Be sure that the top of the stack is below the tray full indicator.

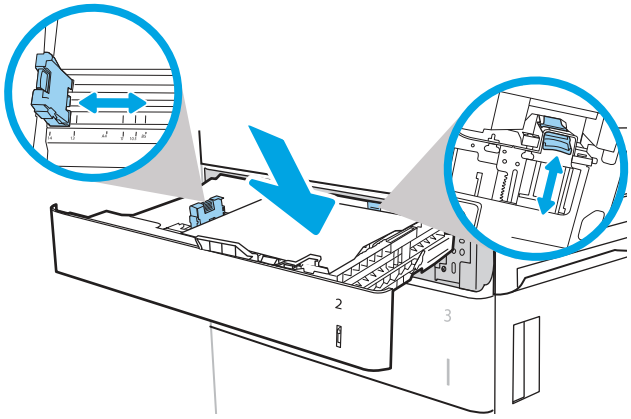

4. Close the tray.

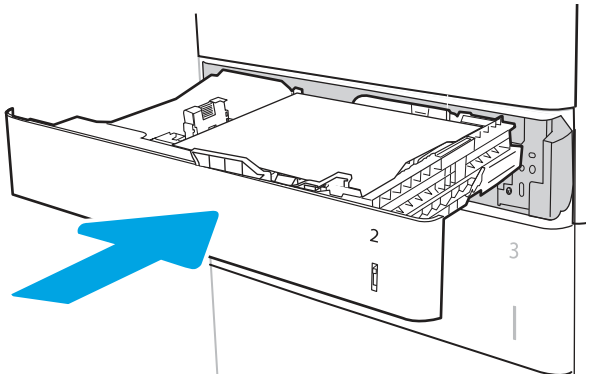

5. The tray configuration message displays on the printer control panel.

6. . Touch the OK button to accept the detected type and size, or touch the Modify button to choose a different paper size or type.

   For custom-size paper, specify the X and Y dimensions for the paper when the prompt displays on the printer control panel.

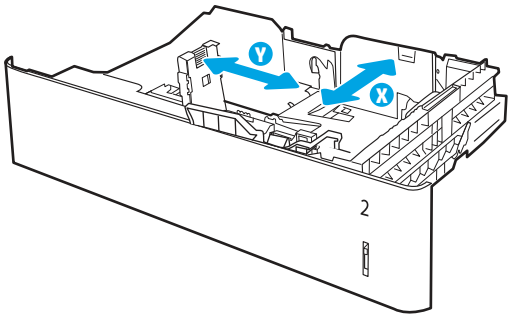

7. . Select the correct type and size, and then touch the OK button.

Tray 2 and the 550-sheet trays paper orientation

Review the paper-loading orientation guidance.

Table 2-2 **Tray 2 and the 550-sheet trays paper orientation**

Paper type	Image orientation	Duplex mode	Paper size	How to load paper
Letterhead or preprinted	Portrait	1-sided printing	Letter, Legal, Executive, Statement, Oficio (8.5 x 13), 4 x 6, 5 x 7, 5 x 8, A4, A5, A6, RA4, B5 (JIS), B6 (JIS), L (90 x 130 mm), 10 x 15 cm, Oficio (216 x 340), 16K 195 x 270 mm, 16K 184 x 260 mm, 16K 197 x 273 mm, Double Japan Postcard Rotated (Double Postcard (JIS))	Face-up Top edge at the left side of the tray 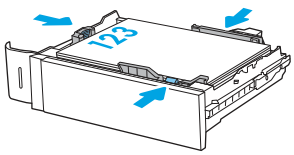
Letterhead or preprinted	Landscape	1-sided printing	Letter, Legal, Executive, Statement, Oficio (8.5 x 13), 4 x 6, 5 x 7, 5 x 8, A4, A5, A6, RA4, B5 (JIS), B6 (JIS), L (90 x 130 mm), 10 x 15 cm, Oficio (216 x 340), 16K 195 x 270 mm, 16K 184 x 260 mm, 16K 197 x 273 mm, Double Japan Postcard Rotated (Double Postcard (JIS))	Face-up Top edge toward the back of the tray 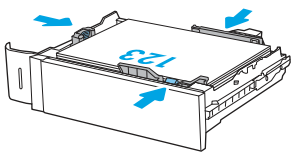

Table 2-2 Tray 2 and the 550-sheet trays paper orientation (continued)

Paper type	Image orientation	Duplex mode	Paper size	How to load paper
Letterhead or preprinted	Landscape	Automatic 2-sided printing or with Alternative Letterhead Mode enabled	Letter, Legal, Executive, Oficio (8.5 x 13), A4, A5, RA4, Oficio (216 x 340), 16K 195 x 270 mm, 16K 184 x 260 mm, 16K 197 x 273 mm	Face-down Top edge toward the back of the tray 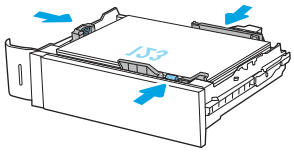
Prepunched	Portrait or landscape	1-sided printing	Letter, Legal, Executive, Statement, Oficio (8.5 x 13), 4 x 6, 5 x 7, 5 x 8, A4, A5, A6, RA4, B5 (JIS), B6 (JIS), L (90 x 130 mm), 10 x 15 cm, Oficio (216 x 340), 16K 195 x 270 mm, 16K 184 x 260 mm, 16K 197 x 273 mm, Double Japan Postcard Rotated (Double Postcard (JIS)	Face-up Holes toward the back of the tray 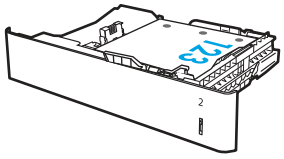
Prepunched	Portrait or landscape	Automatic 2-sided printing or with Alternative Letterhead Mode enabled	Letter, Legal, Executive, Oficio (8.5 x 13), A4, A5, RA4, Oficio (216 x 340), 16K 195 x 270 mm, 16K 184 x 260 mm, 16K 197 x 273 mm	Face-down Holes toward the front of the tray 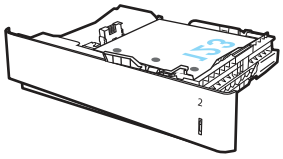

Use alternative letterhead mode

Use the Alternative Letterhead Mode feature to load letterhead or preprinted paper into the tray the same way for all jobs, whether printing to one side of the sheet of paper or to both sides. When using this mode, load paper as for automatic duplex printing.

Enable Alternative Letterhead Mode by using the printer control-panel menus

Use the Settings menu to set the Alternative Letterhead Mode setting.

1. From the Home screen on the printer control panel, navigate to and open the Settings menu.
2. Open the following menus:
   a. Copy/Print or Print
   b. Manage Trays

c. Alternative Letterhead Mode

3. Select On.

Load paper to the 2,000-sheet high-capacity input tray

The following information describes how to load paper in the high-capacity input tray. This tray is part of the 1x550-sheet and 2,000-sheet high-capacity input feeder, which is included with the M635z and M636z models. This tray holds up to 2,000 sheets of 75 g/m2 (20 lb) paper.

Load paper to the high-capacity input tray

This tray holds up to 2,000 sheets of 75 g/m2 (20 lb) paper.

1. Open the tray.

NOTE: Do not open this tray while it is in use.

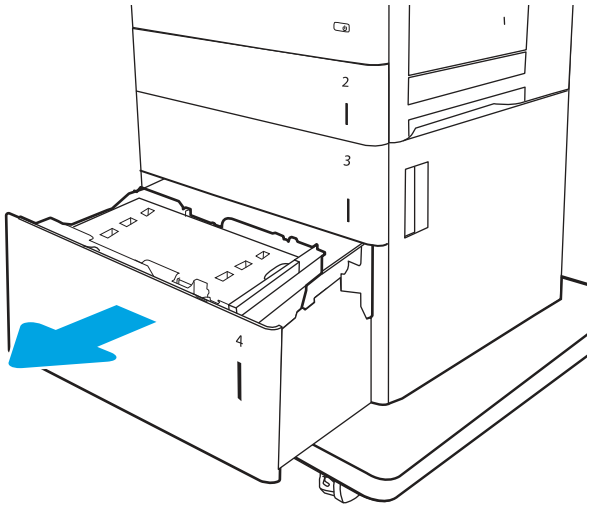

2. Adjust the paper-size lever to the correct position for the paper.

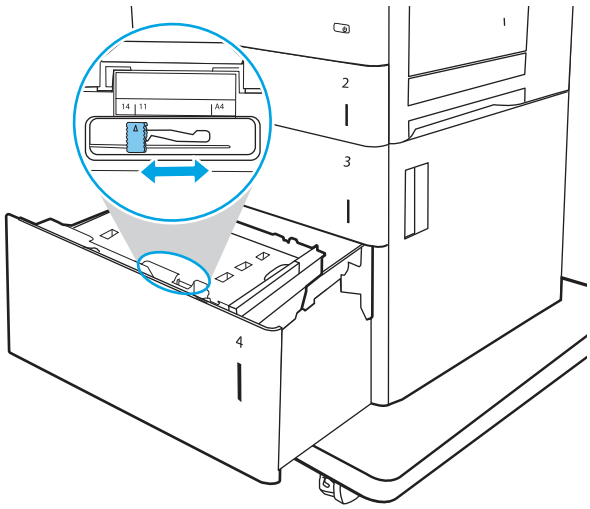

3. Load paper into the tray.

NOTE: To prevent jams, do not overfill the tray. Be sure that the top of the stack is below the tray full indicator.

NOTE: If the tray is not adjusted correctly, an error message might appear during printing or the paper might jam.

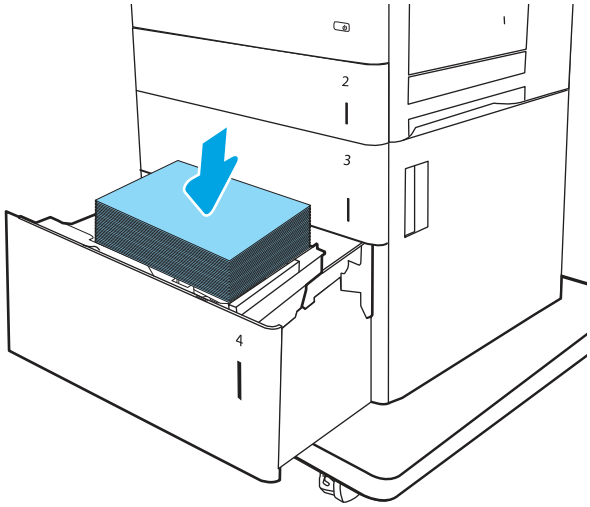

4. Close the tray.

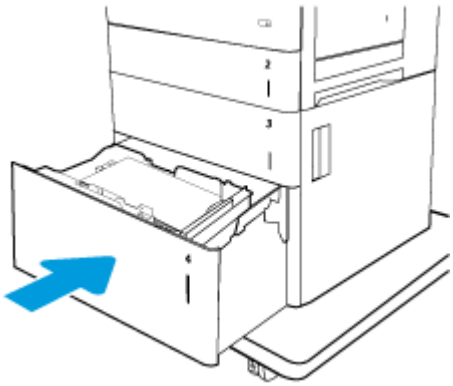

5. The tray configuration message displays on the printer control panel.
6. Touch the OK button to accept the detected type and size, or touch the Modify button to choose a different paper size or type.
7. Select the correct type and size, and then touch the OK button.

Load and print envelopes

Review the following information about loading and printing envelopes.

Print envelopes from Tray 1

Use Tray 1 or the envelope feeder accessory to print on envelopes.

Tray 1 holds up to 10 envelopes, depending on envelope design and environmental conditions.

To print envelopes using the manual feed option, follow these steps to select the correct settings in the print driver, and then load the envelopes into the tray after sending the print job to the printer.

1. From the software program, select the **Print** option.

2. Select the printer from the list of printers, and then click or tap the **Properties** or **Preferences** button to open the print driver.

NOTE: The name of the button varies for different software programs.

NOTE: To access these features from a Windows 8 or 8.1 Start screen, select **Devices**, select **Print**, and then select the printer.

3. Click or tap the **Paper/Quality** tab.
4. In the **Paper size** drop-down list, select the correct size for the envelopes.
5. In the **Paper type** drop-down list, select **Envelope**.
6. In the **Paper source** drop-down list, select **Manual feed**.
7. Click the **OK** button to close the **Document Properties** dialog box.
8. In the **Print** dialog box, click the **Print** button to print the job.

Print envelopes from the envelope feeder accessory

Use the envelope feeder accessory to print on envelopes.

The envelope feeder accessory holds 75 envelopes, depending on envelope design and environmental conditions.

To print envelopes using the manual feed option, follow these steps to select the correct settings in the print driver, and then load the envelopes into the tray after sending the print job to the printer.

1. From the software program, select the **Print** option.
2. Select the printer from the list of printers, and then click or tap the **Properties** or **Preferences** button to open the print driver.

NOTE: The name of the button varies for different software programs.

NOTE: To access these features from a Windows 8 or 8.1 Start screen, select **Devices**, select **Print**, and then select the printer.

3. Click or tap the **Paper/Quality** tab.
4. Complete one of the following steps:
   - In the **Paper** size drop-down list, select the correct size for the envelopes.
   - In the **Paper type** drop-down list, select **Envelope**.
   - In the **Paper source** drop-down list, select **Tray 3** or **Tray 4**—whichever tray corresponds to the envelope feeder.
5. Click the **OK** button to close the **Document Properties** dialog box.
6. In the **Print** dialog box, click the **Print** button to print the job.

Envelope orientation

Review the proper orientation for loading envelopes.

Table 2-3 **Envelope orientation**

Tray	Envelope size	How to load
Tray 1	Envelope #9, Envelope #10, Envelope Monarch, Envelope B5, Envelope C5, Envelope C6, Envelope DL	Face-down Top edge toward the front of the printer 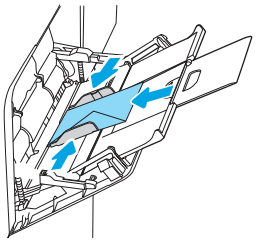
Envelope feeder accessory	Envelope #9, Envelope #10, Envelope Monarch, Envelope B5, Envelope C5, Envelope C6, Envelope DL	Face-up Top edge toward the front of the printer 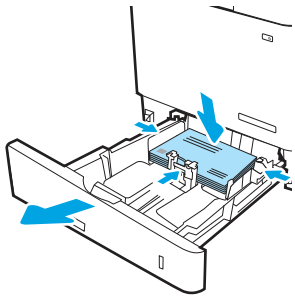

Load and print labels

To print on sheets of labels, use Tray 2 or the 550-sheet trays.

NOTE: Tray 1 does not support labels.

To print labels using the manual feed option, follow these steps to select the correct settings in the print driver, and then load the labels into the tray after sending the print job to the printer. When using manual feed, the printer waits to print the job until it detects that the tray has been opened and closed.

Manually feed labels

Use the manual feed mode to print sheets of labels.

1. From the software program, select the **Print** option.
2. Select the printer from the list of printers, and then click the **Properties** or **Preferences** button to open the print driver.

NOTE: The name of the button varies for different software programs.

NOTE: To access these features from a Windows 8.1 Start screen app, select **Devices**, select **Print**, and then select the printer.

NOTE: To access these features from Windows 10, select **Print**, and then select the printer.

3. Click the **Paper/Quality** tab.
4. In the **Paper size** drop-down list, select the correct size for the sheets of labels.
5. In the **Paper type** drop-down list, select **Labels**.
6. In the **Paper source** drop-down list, select **Manual feed**.

NOTE: When using manual feed, the printer prints from the lowest-numbered tray that is configured for the correct size of paper, so it is not necessary to specify a particular tray. For example, if Tray 2 is configured for labels, the printer will print from Tray 2. If Tray 3 is installed and configured for labels, but Tray 2 is not configured for labels, the printer will print from Tray 3.

7. Click the **OK** button to close the **Document Properties** dialog box.
8. In the **Print** dialog box, click the **Print** button to print the job.

Label orientation

Labels need to be loaded in a specific manner in order to print correctly.

Table 2-4 **Label orientation**

Tray	How to load
Trays 2-5	Face-up Top edge at the right of the tray 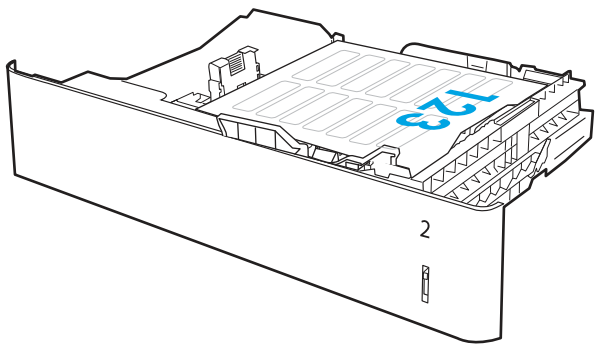

Configure the 3-bin stapler/stacker accessory

The stapling mailbox accessory can staple documents in the upper left or upper right corners, and it can stack up to 900 sheets of paper in the three output bins.

The output bins have three mode-configuration options: stacker mode, mailbox mode, or function separator mode.

Configure the default staple location

Use this procedure to configure the default staple location.

1. From the Home screen on the printer control panel, navigate to the Settings application, and then touch the Settings icon to open the menu.
2. Open the following menus:
   a. Manage Stapler/Stacker
   b. Staple
3. Select a staple location from the list of options, and then touch the Save button. The following options are available:
   - None: No staples
   - Top left or right: If the document has portrait orientation, the staple is in the top left corner of the short edge of the paper. If the document has landscape orientation, the staple is in the top right corner of the long edge of the paper.
   - Top left: The staple is in the top left corner of the short edge of the paper.
   - Top right: The staple is in the top right corner of the long edge of the paper.

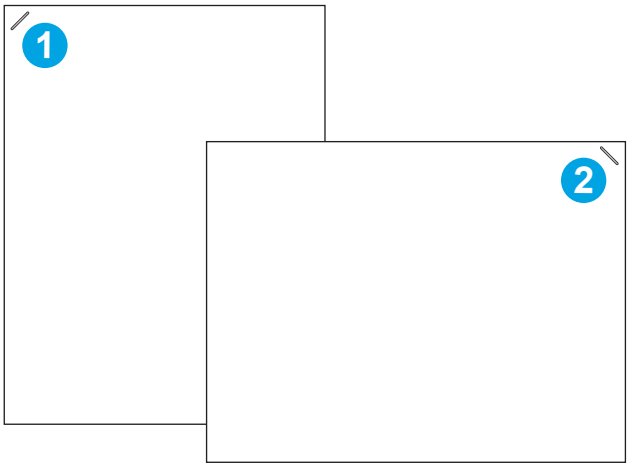

Number	Description
1	Top left corner of the short edge of the paper
2	Top right corner of the long edge of the paper

Configure the operation mode

Use this section to configure how the printer sorts jobs into the output bins.

Set the operation mode

Use this procedure to set the operation mode.

1. From the Home screen on the printer control panel, navigate to the Settings application, and then touch the Settings icon to open the menu.
2. Open the following menus:
   a. Manage Stapler/Stacker

b. Operation Mode

3. Select a mode from the list of options, and then touch the Save button. The following options are available:

   - Mailbox: The printer places jobs in different bins according to the person who sent them.
   - Stacker: The printer stacks jobs in the bins from bottom to top.
   - Function Separator: The printer places jobs in different bins according to printer function such as print jobs, copy jobs, or fax jobs.

Configure the HP print driver for the operation mode

To configure the HP print driver for the selected operation mode, complete the following steps.

Windows® 7

To configure the HP print driver for the selected operation mode, complete the following steps.

1. Make sure the printer is turned on and connected to the computer or a network.
2. Open the Windows® Start menu, and then click **Devices and Printers**.
3. Right-click the name of the printer, and then select **Printer Properties**.
4. Click the **Device Settings** tab.
5. Select **Update Now**. Or, in the drop-down menu next to **Automatic Configuration**, select **Update Now**.

Windows® 8.0, 8.1, and 10

To configure the HP print driver for the selected operation mode, complete the following steps.

1. Open the **Control Panel**:
   - **Windows 8, 8.1:** Right-click on the bottom-left corner of the screen.
   - **Windows 10:** Click the **Start** icon in the bottom-left corner of the screen and type `control panel`.
2. Select **Control Panel**. Under **Hardware and Sound**, select **View devices and printers**.
3. Right-click the name of the printer, and then select **Printer Properties**.
4. Click the **Device Settings** tab.
5. Select **Update Now**. Or, in the drop-down menu next to **Automatic Configuration**, select **Update Now**.

NOTE: Newer V4 drivers do not support **Update Now**. For these drivers, complete **one** of the following procedures:

- Manually configure the operation mode under **Accessory Output Bin**, if listed.
- Stop and restart the print spooler.
  1. Click the **Start** button (or open a search box).
  2. Type `services.msc`, and then press the Enter key.

3. Right-click **Print Spooler** in the list of services, and select **Stop**.
4. Right click **Print Spooler** again, and select **Start**.

- Shut down and restart the computer.

macOS

To configure the HP print driver for the selected operation mode, complete the following steps.

1. From the Apple menu, click **System Preferences**.
2. Select **Print & Scan** (or **Printers & Scanners**).
3. Select the printer, and then select **Options & Supplies**. Select **Driver**.
4. Manually configure the **Accessory Output Mode**.

3 Supplies, accessories, and parts

Order supplies or accessories, replace the toner cartridges, or remove and replace another part.

The following information is correct at the time of publication. For current information, see www.hp.com/support/ljM634MFP, www.hp.com/support/ljM635MFP, or www.hp.com/support/ljM636MFP.

HP's all-inclusive help for the printer includes the following information:

- Install and configure
- Learn and use
- Solve problems
- Download software and firmware updates
- Join support forums
- Find warranty and regulatory information

Order supplies, accessories, and parts

Find out how to obtain replacement supplies, accessories, and parts for the printer.

Ordering

Order parts, supplies, or accessories through one of the following channels.

Table 3-1 **Ordering options**

Ordering option	Ordering information
Order supplies and paper	www.hp.com
Order genuine HP parts or accessories	www.hp.com/buy/parts
Order through service or support providers	Contact an HP-authorized service or support provider.
Order using the HP Embedded Web Server (EWS)	To access, in a supported web browser on your computer, enter the printer IP address or host name in the address/URL field. The EWS contains a link to the HP website, which provides options for purchasing Original HP supplies.

Supplies and accessories

The following information lists supplies and accessories for the printer.

Table 3-2 **Supplies**

Item	Description	Cartridge number	Part number
HP 147Y Extra High Yield Black Original LaserJet Toner Cartridge	Extra high-capacity replacement toner cartridge	147Y	W1470Y

Table 3-2 Supplies (continued)

Item	Description	Cartridge number	Part number
HP 147X High Yield Black Original LaserJet Toner Cartridge	High-capacity replacement toner cartridge	147X	W1470X
HP 147A Black Original LaserJet Toner Cartridge	Standard-capacity replacement toner cartridge	147A	W1470A
HP Staple Cartridge Refill	Replacement staple cartridge	Not applicable	C5967A

Table 3-3 Accessories

Item	Description	Cartridge number	Part number
1 GB Memory DIMM Kit	Memory upgrade kit	Not applicable	E5K48A
2 GB Memory DIMM Kit	Memory upgrade kit	Not applicable	E5K49A
HP LaserJet 550-sheet Paper Tray	Optional input tray	Not applicable	J8J89A
1 x 550-sheet paper feeder with stand	Optional input tray with stand	Not applicable	J8J91A
HP LaserJet 1x550-sheet feeder plus 2,000-sheet HCI feeder with stand	Optional input tray with high-capacity input feeder and stand	Not applicable	J8J92A
3 x 550-sheet paper feeder with stand	Optional input trays (three) with stand	Not applicable	J8J93A
HP LaserJet Envelope Feeder	Optional envelope feeder input tray	Not applicable	J8J90A
HP Internal USB Ports	Optional USB ports for connecting third-party devices	Not applicable	B5L28A
Mass storage: 500 GB HP High-Performance Secure Hard Disk	Replacement hard drive	Not applicable	B5L29A
HP Foreign Interface Harness (FIH)	Optional interface portal	Not applicable	B5L31A
HP LaserJet MFP Analog Fax Accessory 500	Analog fax accessory	Not applicable	CC487A
HP Jetdirect 2900nw Print Server	USB wireless print server accessory	Not applicable	J8031A
HP Jetdirect 3100w BLE/NFC/ Wireless Accessory for printing from mobile devices NOTE: Connected via the Hardware Integration Pocket or the rear host USB port. The HP Jetdirect 3100w BLE/NFC/ Wireless Accessory requires the HP Internal USB ports accessory.	Wireless accessory for "touch" printing from mobile devices	Not applicable	3JN69A

Maintenance/long-life consumables

The following information lists maintenance and long-life consumables for the printer.

Table 3-4 **Maintenance/long life consumables**

Maintenance/LLC Kit	Part number	Estimated life[1]
HP LaserJet 110V Maintenance Kit	J8J87A	225,000 pages*
HP LaserJet 220V Maintenance Kit	J8J88A	225,000 pages*
HP 300 ADF Roller Replacement Kit	J8J95A	150,000 pages*

[1] HP Maintenance/Long Life Consumables (LLC) life specifications are estimations based on the LLC life test conditions listed below. Actual individual life/yield during normal use varies depending on usage, environment, paper and other factors. Estimated life is not an implied guarantee or warrantable.

*The LLC life test conditions

- Print coverage: 5% evenly distributed across the page
- Environment: 17° to 25°C (62.6° to 77°F); 30%-70% relative humidity (RH)
- Media size: Letter/A4
- Media weight: 75 g/m2 (20 lb) plain media
- Job size: 4 pages
- Short edge feed (A3) (i.e., Legal size media)

Factors that can reduce life from the conditions above:

- Media narrower than Letter/A4 widths (thermal slow downs equal more rotations)
- Paper heavier than 75 g/m2 (20 lb) (heavier media creates higher stress on printer components)
- Print jobs smaller than 4 images (smaller jobs mean more thermal cycling and more rotations)

Customer self-repair parts

Customer Self-Repair (CSR) parts are available for many HP LaserJet printers to reduce repair time.

More information about the CSR program and benefits can be found at www.hp.com/go/csr-support and www.hp.com/go/csr-faq.

Genuine HP replacement parts can be ordered at www.hp.com/buy/parts or by contacting an HP-authorized service or support provider. When ordering, one of the following will be needed: part number, serial number (found on back of printer), product number, or printer name.

- Parts listed as **Mandatory** self-replacement are to be installed by customers, unless you are willing to pay HP service personnel to perform the repair. For these parts, on-site or return-to-depot support is not provided under the HP printer warranty.
- Parts listed as **Optional** self-replacement can be installed by HP service personnel at your request for no additional charge during the printer warranty period.

Table 3-5 **Consumer self-repair parts**

Item	Description	Self-replacement options	Part number
HP LaserJet Keyboard Overlay Kit for Simplified Chinese and Traditional Chinese	Keyboard overlay for China	Mandatory	A7W12A
HP LaserJet Keyboard Overlay Kit Sweden	Keyboard overlay for Sweden	Mandatory	A7W14A

Configure the HP toner-cartridge-protection supply settings

A network administrator can configure the toner-cartridge-protection settings using the printer control panel or the HP Embedded Web Server (EWS).

Introduction

Use HP Cartridge Policy and Cartridge Protection to control which cartridges are installed in the printer and protect the cartridges that are installed from theft.

In HP Web Jetadmin, the settings are located under the **Device Management** pane in the following menu chain: **Config** > **Supplies** > **Cartridge Policy** or **Cartridge Protection**.

- Cartridge Policy: This feature protects the printer from counterfeit toner cartridges by allowing only genuine HP cartridges to be used with the printer. Using genuine HP cartridges ensures the best possible print quality. When someone installs a cartridge that is not a genuine HP cartridge, the printer control panel displays a message that the cartridge is unauthorized and it provides information explaining how to proceed.
- Cartridge Protection: This feature permanently associates toner cartridges with a specific printer, or fleet of printers, so they cannot be used in other printers. Protecting cartridges protects your investment. When this feature is enabled, if someone attempts to transfer a protected cartridge from the original printer into an unauthorized printer, that printer will not print with the protected cartridge. The printer control panel displays a message that the cartridge is protected, and it provides information explaining how to proceed.

CAUTION: After enabling cartridge protection for the printer, all subsequent toner cartridges installed in the printer are automatically and *permanently* protected. To avoid protecting a new cartridge, disable the feature *before* installing the new cartridge.

Turning the feature off does not turn off protection for cartridges that are currently installed.

Enable or disable the Cartridge Policy feature

The Cartridge Policy feature can be enabled or disabled using the control panel or the Embedded Web Server (EWS).

NOTE: Enabling or disabling this feature might require entering an administrator password.

Check with your administrator to determine if an administrator password has been set. EWS passwords cannot be recovered.

Use the printer control panel to enable the Cartridge Policy feature

From the printer control panel, a network administrator can enable the Cartridge Policy feature. This allows only genuine HP cartridges to be used with the printer.

1. From the Home screen on the printer control panel, navigate to the Settings application, and then select the Settings icon.
2. Open the following menus:
   a. Manage Supplies
   b. Cartridge Policy
3. Select Authorized HP.

Use the printer control panel to disable the Cartridge Policy feature

From the printer control panel, a network administrator can disable the Cartridge Policy feature. This removes the restriction that only genuine HP cartridges can be used.

1. From the Home screen on the printer control panel, navigate to the Settings application, and then select the Settings icon.
2. Open the following menus:
   a. Manage Supplies
   b. Cartridge Policy
3. Select Off.

Use the HP Embedded Web Server (EWS) to enable the Cartridge Policy feature

From the EWS, a network administrator can enable the Cartridge Policy feature. This allows only genuine HP cartridges to be used with the printer.

1. Open the HP Embedded Web Server (EWS):
   a. From the Home screen on the printer control panel, touch the Information icon , and then touch the Ethernet icon to display the IP address or host name.
   b. Open a web browser, and in the address line, type the IP address or host name exactly as it displays on the printer control panel. Press the `Enter` key on the computer keyboard. The EWS opens.

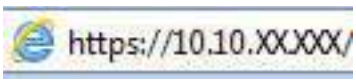

   NOTE: If the web browser displays a message indicating that accessing the website might not be safe, select the option to continue to the website. Accessing this website will not harm the computer.

2. Open the **Copy/Print** tab.
3. From the left navigation pane, select **Manage Supplies**.
4. In the **Supply Settings** area, select **Authorized HP** from the **Cartridge Policy** drop-down list.

5. Click the **Apply** button to save the changes.

Use the HP Embedded Web Server (EWS) to disable the Cartridge Policy feature

From the EWS, a network administrator can disable the Cartridge Policy feature. This removes the restriction that only genuine HP cartridges can be used.

1. Open the HP Embedded Web Server (EWS):

   a. From the Home screen on the printer control panel, touch the Information icon , and then touch the Ethernet icon to display the IP address or host name.

   b. Open a web browser, and in the address line, type the IP address or host name exactly as it displays on the printer control panel. Press the `Enter` key on the computer keyboard. The EWS opens.

   NOTE: If the web browser displays a message indicating that accessing the website might not be safe, select the option to continue to the website. Accessing this website will not harm the computer.

2. Open the **Copy/Print** tab.
3. From the left navigation pane, select **Manage Supplies**.
4. In the **Supply Settings** area, select **Off** from the **Cartridge Policy** drop-down list.
5. Click the **Apply** button to save the changes.

Troubleshoot Cartridge Policy control panel error messages

Review the recommended actions for Cartridge Policy error messages.

Table 3-6 **Cartridge Policy control panel error messages**

Error message	Description	Recommended action
10.0X.30 Unauthorized <Color> Cartridge	The administrator has configured this printer to use only genuine HP supplies that are still under warranty. The cartridge must be replaced to continue printing.	Replace the cartridge with a genuine HP toner cartridge. If you believe you purchased a genuine HP supply, visit www.hp.com/go/anticounterfeit to determine if the toner cartridge is a genuine HP cartridge, and learn what to do if it is not a genuine HP cartridge.

Enable or disable the Cartridge Protection feature

The Cartridge Protection feature can be enabled or disabled using the control panel or the Embedded Web Server (EWS).

NOTE: Enabling or disabling this feature might require entering an administrator password.

Check with your administrator to determine if an administrator password has been set. EWS passwords cannot be recovered.

Use the printer control panel to enable the Cartridge Protection feature

From the printer control panel, a network administrator can enable the Cartridge Protection feature. This protects the cartridges associated with the printer from being stolen and used in other printers.

1. From the Home screen on the printer control panel, navigate to the Settings application, and then select the Settings icon.
2. Open the following menus:
   a. Manage Supplies
   b. Cartridge Protection
3. Select Protect Cartridges.
4. When the printer prompts to confirm, select Continue to enable the feature.

⚠ **CAUTION:** After enabling cartridge protection for the printer, all subsequent toner cartridges installed in the printer are automatically and *permanently* protected. To avoid protecting a new cartridge, disable the feature *before* installing the new cartridge.

Turning the feature off does not turn off protection for cartridges that are currently installed.

Use the printer control panel to disable the Cartridge Protection feature

From the printer control panel, a network administrator can disable the Cartridge Protection feature. This removes protection for any new cartridges installed in the printer.

1. From the Home screen on the printer control panel, navigate to the Settings application, and then select the Settings icon.
2. Open the following menus:
   a. Manage Supplies
   b. Cartridge Protection
3. Select Off.

Use the HP Embedded Web Server (EWS) to enable the Cartridge Protection feature

From the EWS, a network administrator can enable the Cartridge Protection feature. This protects the cartridges associated with the printer from being stolen and used in other printers.

1. Open the HP Embedded Web Server (EWS):
   a. From the Home screen on the printer control panel, touch the Information icon ⓘ, and then touch the Ethernet icon 🖧 to display the IP address or host name.
   b. Open a web browser, and in the address line, type the IP address or host name exactly as it displays on the printer control panel. Press the `Enter` key on the computer keyboard. The EWS opens.

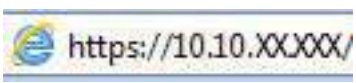

NOTE: If the web browser displays a message indicating that accessing the website might not be safe, select the option to continue to the website. Accessing this website will not harm the computer.

2. Open the **Copy/Print** tab.
3. From the left navigation pane, select **Manage Supplies**.
4. In the Supply Settings area, select **Protect cartridges** from the **Cartridge Protection** drop-down list.
5. Click the **Apply** button to save the changes.

CAUTION: After enabling cartridge protection for the printer, all subsequent toner cartridges installed in the printer are automatically and *permanently* protected. To avoid protecting a new cartridge, disable the feature *before* installing the new cartridge.

Turning the feature off does not turn off protection for cartridges that are currently installed.

Use the HP Embedded Web Server (EWS) to disable the Cartridge Protection feature

From the EWS, a network administrator can disable the Cartridge Protection feature. This removes protection for any new cartridges installed in the printer.

1. Open the HP Embedded Web Server (EWS):
   a. From the Home screen on the printer control panel, touch the Information icon , and then touch the Ethernet icon to display the IP address or host name.
   b. Open a web browser, and in the address line, type the IP address or host name exactly as it displays on the printer control panel. Press the `Enter` key on the computer keyboard. The EWS opens.

   NOTE: If the web browser displays a message indicating that accessing the website might not be safe, select the option to continue to the website. Accessing this website will not harm the computer.

2. Open the **Copy/Print** tab.
3. From the left navigation pane, select **Manage Supplies**.
4. In the Supply Settings area, select **Off** from the **Cartridge Protection** drop-down list.
5. Click the **Apply** button to save the changes.

Troubleshoot Cartridge Protection control panel error messages

Review the recommended actions for Cartridge Protection error messages.

Table 3-7 Cartridge Protection control panel error messages

Error message	Description	Recommended action
10.0X.57 Protected <Color> Cartridge	The cartridge can only be used in the printer or fleet of printers that initially protected it using HP Cartridge Protection. The Cartridge Protection feature allows an administrator to restrict cartridges to work in only one printer or fleet of printers. The cartridge must be replaced to continue printing.	Replace the cartridge with a new toner cartridge.

Replace the toner cartridges

Replace the toner cartridges if you receive a message on the printer, or if you are having print quality problems.

Toner-cartridge information

The printer indicates when the toner-cartridge level is low and very low. The actual toner-cartridge life remaining can vary. Consider having a replacement cartridge available to install when print quality is no longer acceptable.

Continue printing with the current cartridge until redistributing the toner no longer yields acceptable print quality. To redistribute the toner, remove the toner cartridge from the printer and gently rock the cartridge back and forth end to end. Reinsert the toner cartridge into the printer and close the cover.

Table 3-8 Toner cartridge information

Item	Description	Cartridge number	Part number
HP 147Y Extra High Yield Black Original LaserJet Toner Cartridge	Extra high-capacity replacement toner cartridge	147Y	W1470Y
HP 147X High Yield Black Original LaserJet Toner Cartridge	High-capacity replacement toner cartridge	147X	W1470X
HP 147A Black Original LaserJet Toner Cartridge	Standard-capacity replacement toner cartridge	147A	W1470A

NOTE: High-yield toner cartridges contain more toner than standard cartridges for increased page yield. For more information, go to www.hp.com/go/learnaboutsupplies.

Do not remove the toner cartridge from its package until it is time to replace it.

CAUTION: To prevent damage to the toner cartridge, do not expose it to light for more than a few minutes. Cover the green imaging drum if the toner cartridge must be removed from the printer for an extended period of time.

The following illustration shows the toner-cartridge components.

Figure 3-1 HP 147X and 147A toner cartridges / HP 147Y toner cartridge

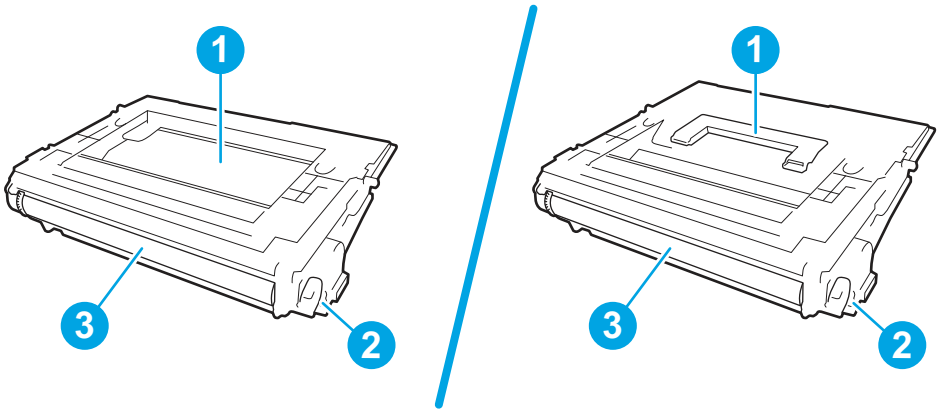

Number	Description
1	Indentation for picking up the cartridge (147A/147X) or handle (HP 147Y Extra High Yield Black Original LaserJet Toner Cartridge only)
2	Memory chip
3	Imaging drum CAUTION: Do not touch the imaging drum. Fingerprints can cause print-quality problems.

CAUTION: If toner gets on clothing, wipe it off by using a dry cloth and wash the clothes in cold water. Hot water sets toner into fabric.

NOTE: Information about recycling used toner cartridges is in the toner-cartridge box.

Remove and replace the cartridge

Follow these steps to remove and replace the toner cartridge.

1. . Press the cartridge door release button to open the door.

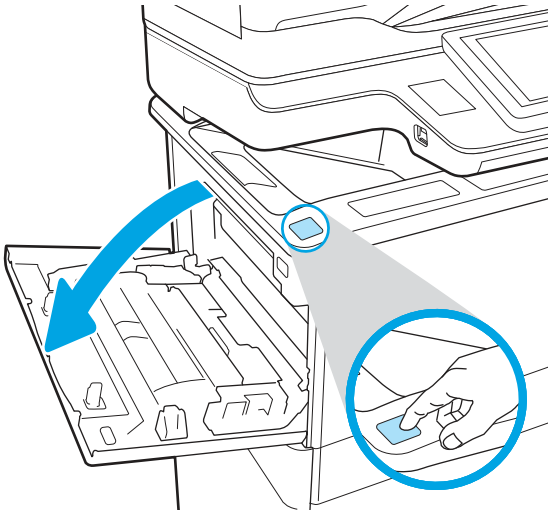

2. Pull out the cartridge drawer.

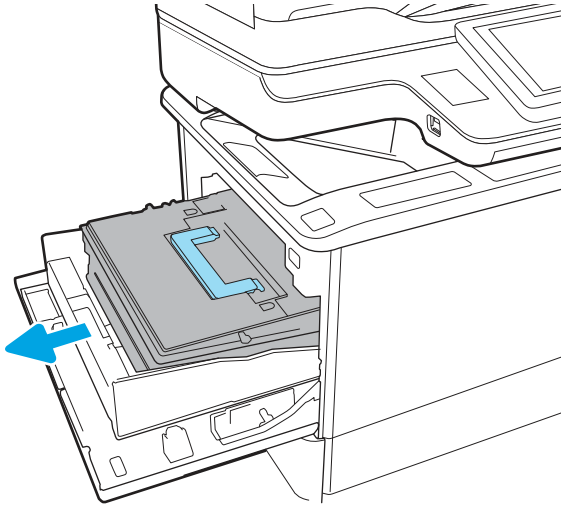

3. Grasp the handle or indentation of the used toner cartridge and pull up to remove it.

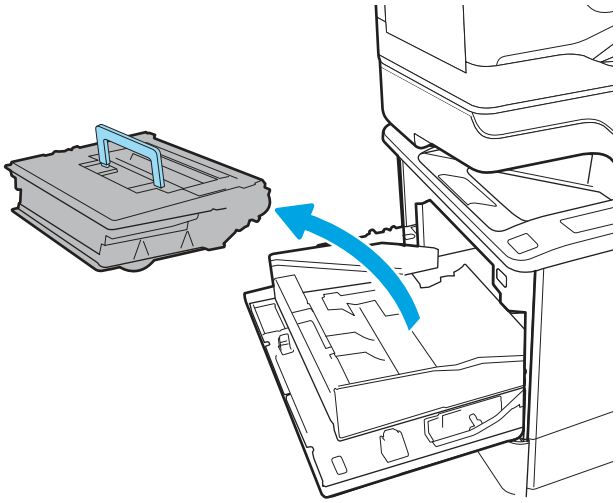

4. Remove the new toner cartridge from its protective bag.

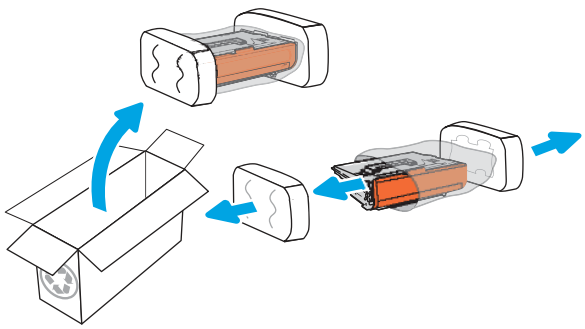

5. Holding the toner cartridge on both ends, gently rock the cartridge end to end to distribute the toner evenly inside the cartridge.

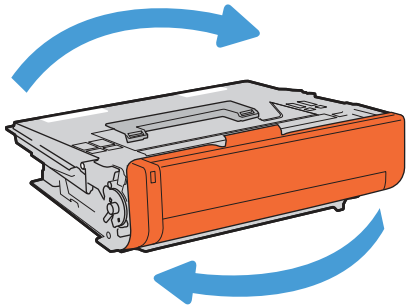

6. Remove the cartridge shipping cover.

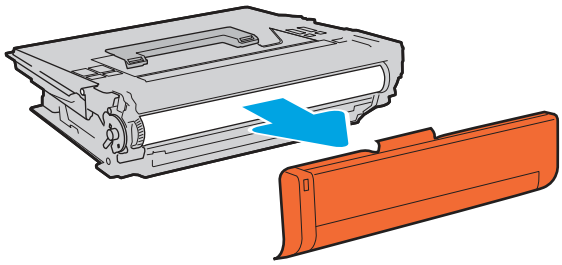

7. Place the toner cartridge in the cartridge drawer.

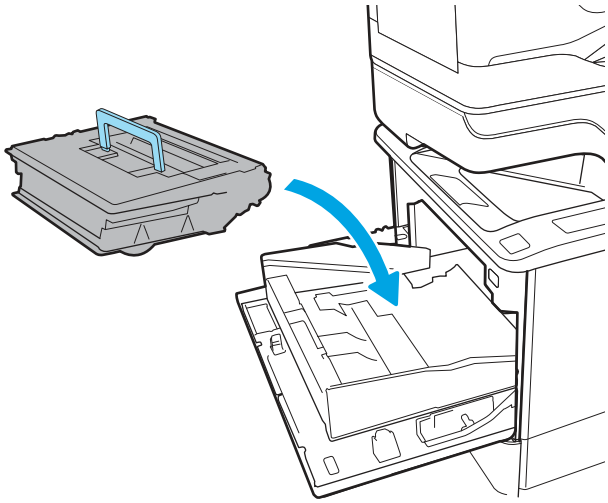

8. . Close the toner cartridge drawer.

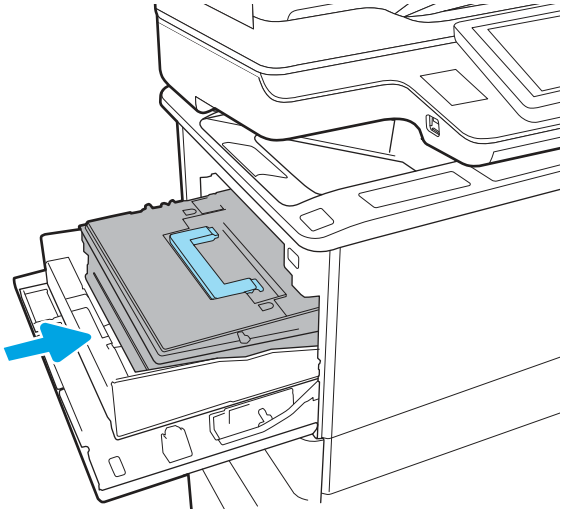

9. . Close the cartridge door.

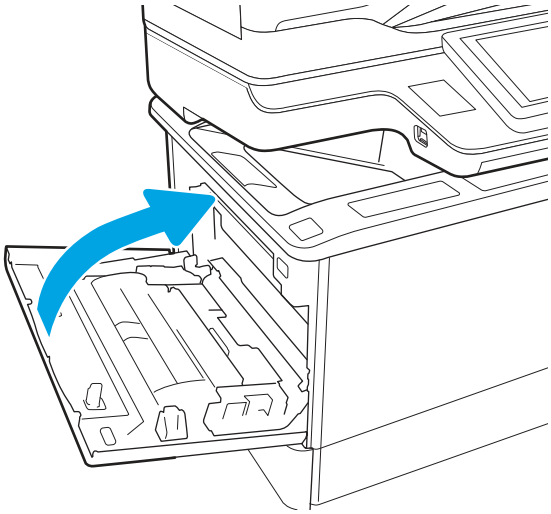

10. . Pack the used toner cartridge into the box that the new cartridge came in. Adhere the prepaid shipping label to the box, and return the used cartridge to HP for recycling.

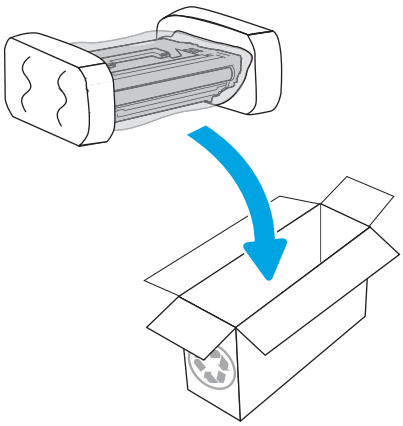

Replace the staple cartridge (stapler models only)

The following applies to models with staplers.

Remove and replace the staple cartridge

Use the following procedure to replace the staple cartridge.

1. Open the staple-cartridge door.

NOTE: Opening the staple-cartridge door disables the stapler.

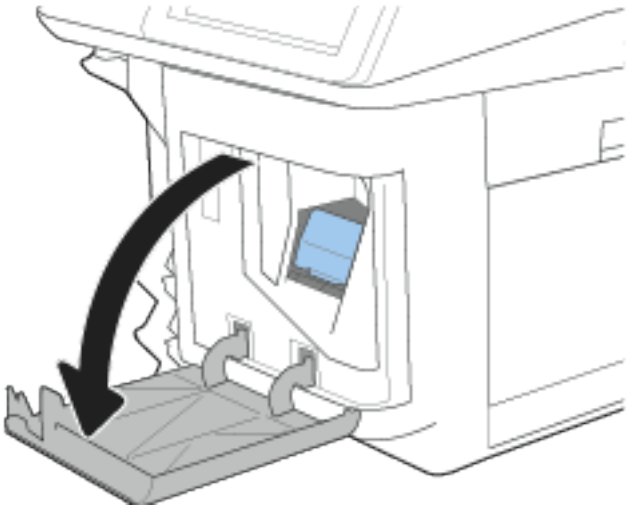

2. Grasp the colored tab on the staple cartridge, and then pull the staple cartridge straight out.

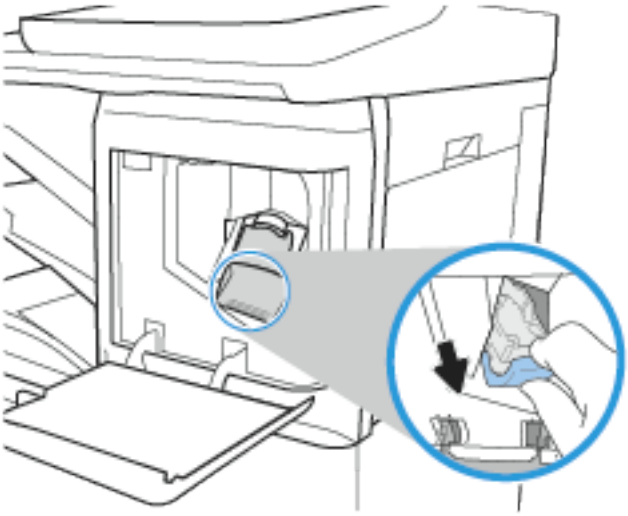

3. Remove the staple cartridge from the sled and replace it with the new staple cartridge.

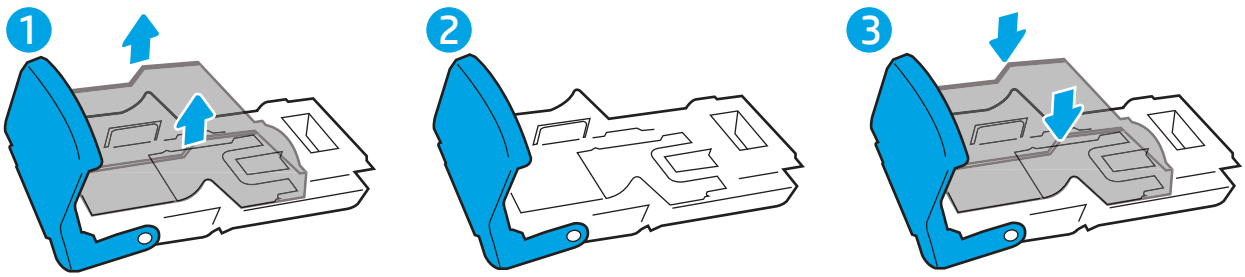

IMPORTANT: Do not dispose of the staple carrier/sled. The sled is not an orderable or replaceable part.

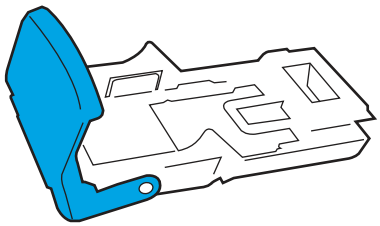

4. Reinsert the full cartridge into the engine by pressing the colored handle toward the printer until it snaps into place.

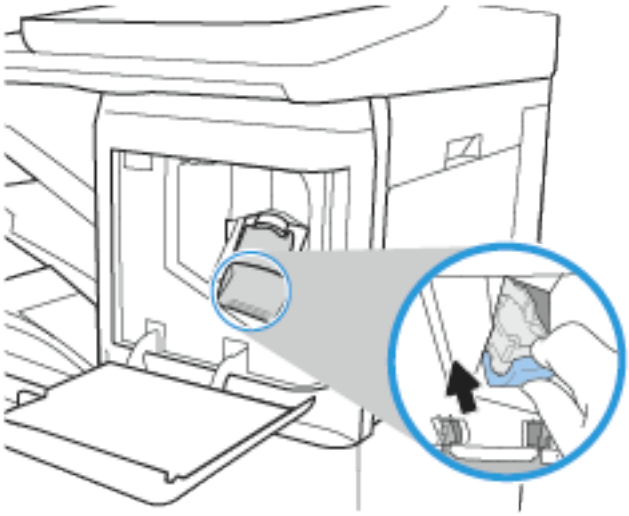

5. Close the staple-cartridge door

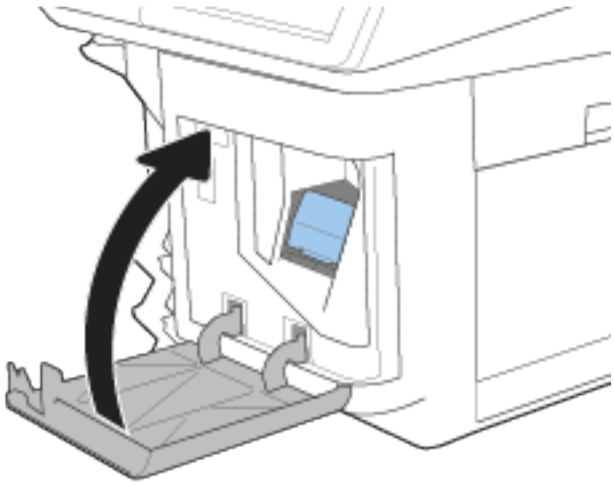

4 Print

Print using the software, or print from a mobile device or USB flash drive.

The following information is correct at the time of publication. For current information, see www.hp.com/support/ljM634MFP, www.hp.com/support/ljM635MFP, or www.hp.com/support/ljM636MFP.

For more information:

HP's all-inclusive help for the printer includes the following information:

- Install and configure
- Learn and use
- Solve problems
- Download software and firmware updates
- Join support forums
- Find warranty and regulatory information

Print tasks (Windows)

Learn about common printing tasks for Windows users.

How to print (Windows)

Use the **Print** option from a software application to select the printer and basic options for your print job.

The following procedure describes the basic printing process for Windows.

1. From the software program, select the **Print** option.
2. Select the printer from the list of printers. To change settings, click the **Properties** or **Preferences** button to open the print driver.

   NOTE: The name of the button varies for different software programs.

   In Windows 10, 8.1, and 8, these applications will have a different layout with different features from what is described below for desktop applications. To access the print feature from a Start screen app, complete the following steps:

   - **Windows 10:** Select **Print**, and then select the printer.
   - **Windows 8.1 or 8:** Select **Devices**, select **Print**, and then select the printer.

   For the HP PCL 6 driver, the HP AiO Printer Remote application downloads additional driver features when **More settings** is selected.

   NOTE: For more information, click the Help (?) button in the print driver.

3. Click the tabs in the print driver to configure the available options. For example, set the paper orientation on the **Finishing** tab, and set the paper source, paper type, paper size, and quality settings on the **Paper/Quality** tab.

4. Click the **OK** button to return to the **Print** dialog box. Select the number of copies to print from this screen.

5. Click the **Print** button to print the job.

Automatically print on both sides (Windows)

If your printer has an automatic duplexer installed, you can automatically print on both sides of the paper. Use a paper size and type supported by the duplexer.

1. From the software program, select the **Print** option.

2. Select the printer from the list of printers, and then click the **Properties** or **Preferences** button to open the print driver.

   NOTE: The name of the button varies for different software programs.

   In Windows 10, 8.1, and 8, these applications will have a different layout with different features from what is described below for desktop applications. To access the print feature from a Start screen app, complete the following steps:

   - **Windows 10:** Select **Print**, and then select the printer.
   - **Windows 8.1 or 8:** Select **Devices**, select **Print**, and then select the printer.

   For the HP PCL 6 driver, the HP AiO Printer Remote application downloads additional driver features when **More settings** is selected.

3. Click the **Finishing** tab.

4. Select **Print on both sides**. Click **OK** to close the **Document Properties** dialog.

5. In the **Print** dialog, click **Print** to print the job.

Manually print on both sides (Windows)

Use this procedure for printers that do not have an automatic duplexer installed or to print on paper that the duplexer does not support.

1. From the software program, select the **Print** option.

2. Select the printer from the list of printers, and then click the **Properties** or **Preferences** button to open the print driver.

   NOTE: The name of the button varies for different software programs.

   In Windows 10, 8.1, and 8, these applications will have a different layout with different features from what is described below for desktop applications. To access the print feature from a Start screen app, complete the following steps:

   - **Windows 10:** Select **Print**, and then select the printer.
   - **Windows 8.1 or 8:** Select **Devices**, select **Print**, and then select the printer.

For the HP PCL 6 driver, the HP AiO Printer Remote application downloads additional driver features when **More settings** is selected.

3. Click the **Finishing** tab.
4. Select **Print on both sides (manually)**, and then click **OK** to close the **Document Properties** dialog.
5. In the **Print** dialog, click **Print** to print the first side of the job.
6. Retrieve the printed stack from the output bin, and place it in Tray 1.
7. If prompted, select the appropriate control panel button to continue.

Print multiple pages per sheet (Windows)

When you print from a software application using the **Print** option, you can select an option to print multiple pages on a single sheet of paper. For example, you might want to do this if you are printing a very large document and want to save paper.

1. From the software program, select the **Print** option.
2. Select the printer from the list of printers, and then click the **Properties** or **Preferences** button to open the print driver.

NOTE: The name of the button varies for different software programs.

In Windows 10, 8.1, and 8, these applications will have a different layout with different features from what is described below for desktop applications. To access the print feature from a Start screen app, complete the following steps:

- **Windows 10:** Select **Print**, and then select the printer.
- **Windows 8.1 or 8:** Select **Devices**, select **Print**, and then select the printer.

For the HP PCL 6 driver, the HP AiO Printer Remote application downloads additional driver features when **More settings** is selected.

3. Click the **Finishing** tab.
4. Select the number of pages per sheet from the **Pages per sheet** drop-down.
5. Select the correct **Print page borders**, **Page order**, and **Orientation** options. Click **OK** to close the **Document Properties** dialog.
6. In the **Print** dialog, click **Print** to print the job.

Select the paper type (Windows)

When you print from a software application using the **Print** option, you can set the paper type you are using for your print job. For example, if your default paper type is Letter, but you are using a different paper type for a print job, select that specific paper type.

1. From the software program, select the **Print** option.
2. Select the printer from the list of printers, and then click the **Properties** or **Preferences** button to open the print driver.

NOTE: The name of the button varies for different software programs.

In Windows 10, 8.1, and 8, these applications will have a different layout with different features from what is described below for desktop applications. To access the print feature from a Start screen app, complete the following steps:

- **Windows 10:** Select **Print**, and then select the printer.
- **Windows 8.1 or 8:** Select **Devices**, select **Print**, and then select the printer.

For the HP PCL 6 driver, the HP AiO Printer Remote application downloads additional driver features when **More settings** is selected.

3. Click the **Paper/Quality** tab.
4. Select the paper type from the **Paper type** drop-down list.
5. Click **OK** to close the **Document Properties** dialog. In the **Print** dialog, click **Print** to print the job.

   If the tray needs to be configured, a tray configuration message displays on the printer control panel.
6. Load the tray with the specified type and size of paper, and then close the tray.
7. Touch the OK button to accept the detected type and size, or touch the Modify button to choose a different paper size or type.
8. Select the correct type and size, and then touch the OK button.

Additional print tasks

Locate information on the Web for performing common printing tasks.

Go to www.hp.com/support/ljM634MFP, www.hp.com/support/ljM635MFP, or www.hp.com/support/ljM636MFP.

Instructions are available for print tasks, such as the following:

- Create and use printing shortcuts or presets
- Select the paper size, or use a custom paper size
- Select the page orientation
- Create a booklet
- Scale a document to fit a specific paper size
- Print the first or last pages of the document on different paper
- Print watermarks on a document

Print tasks (macOS)

Print using the HP printing software for macOS, including how to print on both sides or print multiple pages per sheet.

How to print (macOS)

Use the **Print** option from a software application to select the printer and basic options for your print job.

The following procedure describes the basic printing process for macOS.

1. Click the **File** menu, and then click the **Print** option.
2. Select the printer.
3. Click **Show Details** or **Copies & Pages**, and then select other menus to adjust the print settings.

   NOTE: The name of the item varies for different software programs.

4. Click the **Print** button.

Automatically print on both sides (macOS)

If your printer has an automatic duplexer installed, you can automatically print on both sides of the paper. Use a paper size and type supported by the duplexer.

NOTE: This information applies to printers that include an automatic duplexer.

NOTE: This feature is available if you install the HP print driver. It might not be available if you are using AirPrint®.

1. Click the **File** menu, and then click the **Print** option.
2. Select the printer.
3. Click **Show Details** or **Copies & Pages**, and then click the **Layout** menu.

   macOS 10.14 Mojave and later: Click **Show Details**, click **Two-Sided**, and then click the **Layout** menu.

   NOTE: The name of the item varies for different software programs.

4. Select a binding option from the **Two-Sided** drop-down list.
5. Click the **Print** button.

Manually print on both sides (macOS)

Use this procedure for printers that do not have an automatic duplexer installed or to print on paper that the duplexer does not support.

NOTE: This feature is available if you install the HP print driver. It might not be available if you are using AirPrint.

1. Click the **File** menu, and then click the **Print** option.
2. Select the printer.
3. Click **Show Details** or **Copies & Pages**, and then click the **Manual Duplex** menu.

   NOTE: The name of the item varies for different software programs.

4. Click the **Manual Duplex** box, and select a binding option.
5. Click the **Print** button.
6. Go to the printer and remove any blank paper that is in Tray 1.

7. Retrieve the printed stack from the output bin and place it with the printed-side facing down in the input tray.

8. If prompted, touch the appropriate control panel button to continue.

Print multiple pages per sheet (macOS)

When you print from a software application using the **Print** option, you can select an option to print multiple pages on a single sheet of paper. For example, you might want to do this if you are printing a very large document and want to save paper.

1. Click the **File** menu, and then click the **Print** option.

2. Select the printer.

3. Click **Show Details** or **Copies & Pages**, and then click the **Layout** menu.

NOTE: The name of the item varies for different software programs.

4. From the **Pages per Sheet** drop-down list, select the number of pages that you want to print on each sheet.

5. In the **Layout Direction** area, select the order and placement of the pages on the sheet.

6. From the **Borders** menu, select the type of border to print around each page on the sheet.

7. Click the **Print** button.

Select the paper type (macOS)

When you print from a software application using the **Print** option, you can set the paper type you are using for your print job. For example, if your default paper type is Letter, but you are using a different paper type for a print job, select that specific paper type.

1. Click the **File** menu, and then click the **Print** option.

2. Select the printer.

3. Click **Show Details** or **Copies & Pages**, and then click the **Media & Quality** menu or the **Paper/Quality** menu.

NOTE: The name of the item varies for different software programs.

4. Select from the **Media & Quality** or **Paper/Quality** options.

NOTE: This list contains the master set of options available. Some options are not available on all printers.

- **Media Type**: Select the option for the type of paper for the print job.
- **Print Quality** or **Quality**: Select the resolution level for the print job.
- **Edge-To-Edge Printing**: Select this option to print close to the paper edges.

5. Click the **Print** button.

Additional print tasks

Locate information on the Web for performing common printing tasks.

Go to www.hp.com/support/ljM634MFP, www.hp.com/support/ljM635MFP, or www.hp.com/support/ljM636MFP.

Instructions are available for print tasks, such as the following:

- Create and use printing shortcuts or presets
- Select the paper size, or use a custom paper size
- Select the page orientation
- Create a booklet
- Scale a document to fit a specific paper size
- Print the first or last pages of the document on different paper
- Print watermarks on a document

Store print jobs on the printer to print later or print privately

Store print jobs in the printer memory for printing at a later time.

Introduction

The following information provides procedures for creating and printing documents that are stored on the USB flash drive. These jobs can be printed at a later time or printed privately.

Create a stored job (Windows)

Store jobs on the USB flash drive for private or delayed printing.

1. From the software program, select the **Print** option.
2. Select the printer from the list of printers, and then select **Properties** or **Preferences**.

   NOTE: The name of the button varies for different software programs.

   In Windows 10, 8.1, and 8, these applications will have a different layout with different features from what is described below for desktop applications. To access the print feature from a Start screen app, complete the following steps:

   - **Windows 10:** Select **Print**, and then select the printer.
   - **Windows 8.1 or 8:** Select **Devices**, select **Print**, and then select the printer.

   For the HP PCL 6 driver, the HP AiO Printer Remote application downloads additional driver features when **More settings** is selected.

3. Click the **Job Storage** tab.
4. Select a **Job Storage Mode** option:
   - **Proof and Hold**: Print and proof one copy of a job, and then print more copies.

- **Personal Job**: The job does not print until you request it at the printer control panel. For this job-storage mode, you can select one of the **Make Job Private/Secure** options. If you assign a personal identification number (PIN) to the job, you must provide the required PIN at the control panel. If you encrypt the job, you must provide the required password at the control panel. The print job is deleted from memory after it prints and is lost if the printer loses power.
- **Quick Copy**: Print the requested number of copies of a job and store a copy of the job in the printer memory so you can print it again later.
- **Stored Job**: Store a job on the printer and allow other users to print the job at any time. For this job-storage mode, you can select one of the **Make Job Private/Secure** options. If you assign a personal identification number (PIN) to the job, the person who prints the job must provide the required PIN at the control panel. If you encrypt the job, the person who prints the job must provide the required password at the control panel.

5. To use a custom user name or job name, click the **Custom** button, and then enter the user name or the job name.

   Select which option to use if another stored job already has that name:

   - **Use Job Name + (1-99)**: Append a unique number to the end of the job name.
   - **Replace Existing File**: Overwrite the existing stored job with the new one.

6. Click the **OK** button to close the **Document Properties** dialog box. In the **Print** dialog box, click the **Print** button to print the job.

Create a stored job (macOS)

Store jobs on the USB flash drive for private or delayed printing.

1. Click the **File** menu, and then click the **Print** option.
2. In the **Printer** menu, select the printer.
3. Click **Show Details** or **Copies & Pages**, and then click the **Job Storage** menu.

   NOTE: If the **Job Storage** menu is not showing, follow the instructions in the "Disable or enable job storage feature" section to activate the menu.

4. In the **Mode** drop-down list, select the type of stored job.

   - **Proof and Hold**: Print and proof one copy of a job, and then print more copies. The first copy prints immediately. Printing of the subsequent copies must be initiated from the device's front control panel. For example, if 10 copies are sent, one copy prints immediately, and the other nine copies will print when the job is retrieved. The job is deleted after all copies are printed.
   - **Personal Job**: The job does not print until someone requests it at the printer control panel. If the job has a personal identification number (PIN), provide the required PIN at the control panel. The print job is deleted from memory after it prints.
   - **Quick Copy**: Print the requested number of copies of a job and store a copy of the job in the printer memory to print it again later. The job is deleted manually or by the job retention schedule.
   - **Stored Job**: Store a job on the printer and allow other users to print the job at any time. If the job has a personal identification number (PIN), the person who prints the job must provide the required PIN at the control panel. The job is deleted manually or by the job retention schedule.

5. To use a custom user name or job name, click the **Custom** button, and then enter the user name or the job name.

NOTE: **macOS 10.14 Mojave and later**: The print driver no longer includes the **Custom** button. Use the options below the **Mode** drop-down list to set up the saved job.

Select which option to use if another stored job already has that name.

- **Use Job Name + (1-99)**: Append a unique number to the end of the job name.
- **Replace Existing File**: Overwrite the existing stored job with the new one.

6. If you selected the **Stored Job** or **Personal Job** option in the **Mode** drop-down list, you can protect the job with a PIN. Type a 4-digit number in the **Use PIN to Print** field. When other people attempt to print this job, the printer prompts them to enter this PIN.
7. Click the **Print** button to process the job.

Print a stored job

Use the following procedure to print a job that is stored in the printer memory.

1. From the Home screen on the printer control panel, navigate to the Print application, and then select the Print icon.
2. Select Print from Job Storage.
3. Select the name of the folder where the job is stored, or select Choose to see the folder list.
4. Select the name of the job. If the job is private or encrypted, enter the PIN or password.
5. To adjust the number of copies, select the number of copies field. Use the keypad to enter the number of copies to print.
6. Select Start or Print to print the job.

Delete a stored job

You can delete documents that have been saved to the printer when they are no longer needed. You can also adjust the maximum number of jobs for the printer to store.

Delete a job that is stored on the printer

Use the control panel to delete a job that is stored in the printer memory.

1. From the Home screen on the printer control panel, navigate to the Print application, and then select the Print icon.
2. Select Print from Job Storage.
3. Select the name of the folder where the job is stored or select Choose to see the folder list.
4. Select the name of the job. If the job is private or encrypted, enter the PIN or password.
5. Select the Trash button to delete the job.

Change the job storage limit

When a new job is stored in the printer memory, the printer overwrites any previous jobs with the same user and job name. If a job is not already stored under the same user and job name, and the printer needs additional space, the printer might delete other stored jobs starting with the oldest.

To change the number of jobs that the printer can store, complete the following procedure:

1. From the Home screen on the printer control panel, navigate to the Settings application, and then select the Settings icon.
2. Open the following menus:
   a. Copy/Print or Print
   b. Manage Stored Jobs
   c. Temporary Job Storage Limit
3. Use the keypad to enter the number of jobs that the printer stores.
4. Select OK or Done to save the setting.

Information sent to printer for Job Accounting purposes

Printing jobs sent from drivers on the client (e.g., PC) may send personally identifiable information to HP's Printing and Imaging devices. This information may include, but is not limited to, user name and client name from which the job originated that may be used for job accounting purposes, as determined by the Administrator of the printing device. This same information may also be stored with the job on the mass storage device (e.g., disk drive) of the printing device when using the job storage feature.

Mobile printing

Mobile and ePrint solutions enable easy printing to an HP printer from a laptop, tablet, smartphone, or other mobile device.

Introduction

HP offers multiple mobile printing solutions to enable easy printing to an HP printer from a laptop, tablet, smartphone, or other mobile device.

To see the full list and to determine the best choice, go to www.hp.com/go/LaserJetMobilePrinting.

Wi-Fi, Wi-Fi Direct Print, NFC, and BLE printing

HP provides Wi-Fi Direct Print, Near Field Communication (NFC), and Bluetooth Low Energy (BLE) printing for printers with a supported HP Jetdirect 3100w BLE/NFC/Wireless Accessory. This is an optional accessory.

These features enable Wi-Fi capable (mobile) devices to make a wireless network connection directly to the printer without using a wireless router.

The printer does not need to be connected to the network for this mobile walk-up printing to work.

Use Wi-Fi Direct Print to print wirelessly from the following devices:

- iPhone, iPad, or iPod touch using Apple AirPrint

- Android mobile devices using the Android embedded print solution

For more information on wireless printing, go to www.hp.com/go/LaserJetMobilePrinting.

NFC, BLE, and Wi-Fi Direct Print capabilities can be enabled or disabled from the printer control panel.

Enable wireless printing

To print wirelessly from mobile devices, Wi-Fi Direct must be turned on.

1. From the Home screen on the printer control panel, select the Settings menu.
2. Select the following menus:
   a. Networking
   b. Wi-Fi Direct
   c. Status
3. Select On, and then select OK to enable wireless printing.

Change the Wi-Fi Direct name

Change the printer Wi-Fi Direct name using the HP Embedded Web Server (EWS).

NOTE: In environments where more than one model of the same printer is installed, it might be helpful to provide each printer a unique Wi-Fi Direct Name for easier printer identification for HP Wi-Fi Direct printing. The Wireless network names, e.g., Wireless, Wi-Fi Direct, etc. are available on the Information screen by selecting the Information icon , and then selecting the Wi-Fi Direct icon .

Complete the following procedure to change the printer Wi-Fi Direct name:

1. From the Home screen on the printer control panel, select the Settings icon.
2. Open the following menus:
   a. Networking
   b. Wi-Fi Direct
   c. Wi-Fi Direct Name
3. Use the keypad to change the name in the Wi-Fi Direct Name text field, and then select OK.

HP ePrint via email

Use HP ePrint via email to print documents by sending them as an email attachment to the printer's email address from any email enabled device.

To use HP ePrint via email, the printer must meet these requirements:

- The printer must be connected to a wired or wireless network and have Internet access.
- HP Web Services must be enabled on the printer, and the printer must be registered with HP Smart.

Follow this procedure to enable HP Web Services and register with HP Smart:

1. Open the HP Embedded Web Server (EWS):

a. From the Home screen on the printer control panel, touch the Information icon , and then touch the Ethernet icon to display the IP address or host name.

b. From a computer on the same network as the printer, open a web browser. In the address line, type the IP address or host name exactly as it displays on the printer control panel. Press the `Enter` key on the computer keyboard. The EWS opens.

NOTE: If the web browser displays a message indicating that accessing the website might not be safe, select the option to continue to the website. Accessing this website will not harm the computer.

2. Click the **HP Web Services** tab.

3. Select the option to enable Web Services.

NOTE: Enabling Web Services might take several minutes.

4. Go to www.hpconnected.com to create an account and complete the setup process.

AirPrint

Direct printing using Apple's AirPrint is supported for iOS and from Mac computers running macOS 10.7 Lion and newer.

Use AirPrint to print directly to the printer from an iPad, iPhone (3GS or later), or iPod touch (third generation or later) in the following mobile applications:

- Mail
- Photos
- Safari
- iBooks
- Select third-party applications

To use AirPrint, the printer must be connected to the same network (sub-net) as the Apple device. For more information about using AirPrint and about which HP printers are compatible with AirPrint, go to www.hp.com/go/MobilePrinting.

NOTE: Before using AirPrint with a USB connection, verify the version number. AirPrint versions 1.3 and earlier do not support USB connections.

Android embedded printing

HP's built-in print solution for Android and Kindle enables mobile devices to automatically find and print to HP printers that are either on a network or within wireless range for Wi-Fi Direct printing.

The print solution is built into many versions of the operating system.

NOTE: If printing is not available on your device, go to the Google Play > Android apps and install the HP Print Service Plugin.

For more information on how to use Android embedded printing and which Android devices are supported, go to www.hp.com/go/MobilePrinting.

Print from a USB flash drive

This printer features easy-access USB printing to print files without a computer.

The printer accepts standard USB flash drives in the USB port near the control panel. It supports the following types of files:

- .pdf
- .prn
- .pcl
- .ps
- .cht

Enable the USB port for printing

The USB port is disabled by default. Before using this feature, enable the USB port.

Use one of the following methods to enable the port:

Method one: Enable the USB port from the printer control panel

Use the printer control panel to enable the USB port for printing.

1. From the Home screen on the printer control panel, navigate to the Settings application, and then select the Settings icon.
2. Open the following menus:
   a. Copy/Print or Print
   b. Enable Device USB
3. Select Enable Print from USB Drive.

Method two: Enable the USB port from the HP Embedded Web Server (network-connected printers only)

Use the HP Embedded Web Server to enable the USB port for printing.

1. From the Home screen on the printer control panel, touch the Information icon , and then touch the Ethernet icon to display the IP address or host name.
2. Open a web browser, and in the address line, type the IP address exactly as it displays on the printer control panel. Press the `Enter` key on the computer keyboard. The EWS opens.

NOTE: If the web browser displays a message indicating that accessing the website might not be safe, select the option to continue to the website. Accessing this website will not harm the computer.

3. Select the **Copy/Print** tab for MFP models or the **Print** tab for SFP models.
4. In the left menu, select **Print from USB Drive Settings**.
5. Select **Enable Print from USB Drive**.
6. Click **Apply**.

Print USB documents

Print documents from a USB flash drive.

1. Insert the USB flash drive into the easy-access USB port.

NOTE: The port might be covered. For some printers, the cover flips open. For other printers, pull the cover straight out to remove it.

2. From the Home screen on the printer control panel, navigate to the Print application, and then select the Print icon.
3. Select Print from USB Drive.
4. Select Choose, select the name of the document to print, and then select Select.

NOTE: The document might be in a folder. Open folders as necessary.

5. To adjust the number of copies, touch the box to the left of the Print button, and then select the number of copies from the keypad that opens. To close the keypad, select the Close button .
6. Select Print to print the document.

5 Copy

Make copies with the printer, learn how to copy a two-sided document, and locate additional copy tasks on the web.

The following information is correct at the time of publication. For current information, see www.hp.com/support/ljM634MFP, www.hp.com/support/ljM635MFP, or www.hp.com/support/ljM636MFP.

For more information:

HP's all-inclusive help for the printer includes the following information:

- Install and configure
- Learn and use
- Solve problems
- Download software and firmware updates
- Join support forums
- Find warranty and regulatory information

Make a copy

Copy a document or picture from the scanner glass or automatic document feeder.

1. Place the document face-down on the scanner glass, or place it face-up in the document feeder and adjust the paper guides to fit the size of the document.
2. From the Home screen on the printer control panel, navigate to the Copy application, and then select the Copy icon.
3. To select the number of copies, touch the box next to Copy, use the keypad to enter the number of copies, and then touch the close keypad button .
4. Select Optimize Text/Picture to optimize for the type of image being copied: text, graphics, or photos. Select one of the predefined options.
5. Set options marked with a yellow triangle before using the preview feature.

NOTE: After the preview scan, these options are removed from the main Options list and are summarized in the Pre-scan Options list. To change any of these options, discard the preview and start over.

Using the preview feature is optional.

6. Touch the right pane of the screen to preview the document. In the preview screen, use the buttons on the right of the screen to adjust the preview options and to rearrange, rotate, insert, or remove pages.

Table 5-1 **Buttons on the right side of the preview pane**

Button	Description
	Use these buttons to toggle between single-page view and thumbnail view. More options are available in thumbnail view than in single-page view.
	Use these buttons to zoom in or out on the selected page. NOTE: Select only one page at a time to use these buttons.
	Use this button to rotate the page 180 degrees. NOTE: This button is available only in the thumbnail view.
	Use this button to delete the selected pages. NOTE: This button is available only in the thumbnail view.
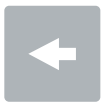	Use these buttons to rearrange the pages within the document. Select one or more pages and move them to the left or right. NOTE: These buttons are available only in the thumbnail view.
	Use this button to add a page to the document. The printer prompts to scan additional pages.
	Use this button to clear the changes made in the preview and start over.
	Touch this button to collapse the preview screen and return to the Copy screen.

7. When the document is ready, touch Copy to begin copying.

Copy on both sides (duplex)

Copy or print on both sides of the paper.

1. Place the document face-down on the scanner glass, or place it face-up in the document feeder and adjust the paper guides to fit the size of the document.
2. From the Home screen on the printer control panel, navigate to the Copy application, and then select the Copy icon.
3. In the Options pane, select Original Side, and then select the option that describes the original document:
   - Use Automatically detect to detect whether the original is printed on one or both sides of the page.
   - Use 1-sided for originals that are printed on one side of the page.
   - Use 2-sided (book-style) for originals that flip on the right/left edge of the page, like books. If the image is portrait, the output flips on the long edge of the page. If the image is landscape, the output flips on the short edge of the page.
   - Use 2-sided (flip-style) for originals that flip on the top/bottom edge of the page, like calendars. If the image is portrait, the output flips on the short edge of the page. If the image is landscape, the output flips on the long edge of the page.
4. Select Output Sides, and then select one of these options:
   - Match original: The output will match the format of the original. For example, if the original is 1-sided, the output will be 1-sided. However, if the administrator has restricted 1-sided printing and the original is 1-sided, the output will be 2-sided book-style.
   - 1-sided: The output will be 1-sided. However, if the administrator has restricted 1-sided printing, the output will be 2-sided book-style.
   - 2-sided (book-style): The output will flip on the right/left edge of the page, like a book. If the image is portrait, the output flips on the long edge of the page. If the image is landscape, the output flips on the short edge of the page.
   - 2-sided (flip-style): The output will flip on the top/bottom edge of the page, like a calendar. If the image is portrait, the output flips on the short edge of the page. If the image is landscape, the output flips on the long edge of the page.
5. Set options marked with a yellow triangle before using the preview feature.

NOTE: After the preview scan, these options are removed from the main Options list and are summarized in the Pre-scan Options list. To change any of these options, discard the preview and start over.

Using the preview feature is optional.

6. Touch the right pane of the screen to preview the document. In the preview screen, use the buttons on the right of the screen to adjust the preview options and to rearrange, rotate, insert, or remove pages.

Table 5-2 **Buttons on the right side of the preview pane**

Button	Description
	Use these buttons to toggle between single-page view and thumbnail view. More options are available in thumbnail view than in single-page view.
	Use these buttons to zoom in or out on the selected page. NOTE: Select only one page at a time to use these buttons.
	Use this button to rotate the page 180 degrees. NOTE: This button is available only in the thumbnail view.
	Use this button to delete the selected pages. NOTE: This button is available only in the thumbnail view.
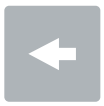	Use these buttons to rearrange the pages within the document. Select one or more pages and move them to the left or right. NOTE: These buttons are available only in the thumbnail view.
	Use this button to add a page to the document. The printer prompts to scan additional pages.
	Use this button to clear the changes made in the preview and start over.
	Touch this button to collapse the preview screen and return to the Copy screen.

7. When the document is ready, touch Start to begin copying.

Additional copy tasks

Locate information on the Web for performing common copy tasks.

Go to www.hp.com/support/ljM634MFP, www.hp.com/support/ljM635MFP, or www.hp.com/support/ljM636MFP.

Instructions are available for copy tasks, such as the following:

- Copy or scan pages from books or other bound documents
- Copy mixed-size documents
- Copy or scan both sides of an identification card
- Copy or scan a document into a booklet format

6 Scan

Scan using the software, or scan directly to email, a USB flash drive, a network folder, or another destination.

The following information is correct at the time of publication. For current information, see www.hp.com/support/ljM634MFP, www.hp.com/support/ljM635MFP, or www.hp.com/support/ljM636MFP.

For more information:

HP's all-inclusive help for the printer includes the following information:

- Install and configure
- Learn and use
- Solve problems
- Download software and firmware updates
- Join support forums
- Find warranty and regulatory information

Set up Scan to Email

The printer has a feature that enables it to scan a document and send it to one or more email addresses.

Introduction

To use this scan feature, the printer must be connected to a network; however, the feature is not available until it has been configured. There are two methods for configuring Scan to Email, the **Scan to Email Setup Wizard** for basic and **Email Setup** for advanced.

Use the following information to set up the Scan to Email feature.

Before you begin

To set up the Scan to Email feature, the printer must have an active network connection.

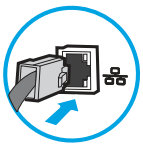

Administrators need the following information before beginning the configuration process.

- Administrative access to the printer
- DNS suffix (e.g., companyname.com)

- SMTP server (e.g., smtp.mycompany.com)

NOTE: If you do not know the SMTP server name, SMTP port number, or authentication information, contact the email/Internet service provider or system administrator for the information. SMTP server names and port names are typically found by doing an Internet search. For example, use terms like "Gmail smtp server name" or "Yahoo smtp server name" to search.

- SMTP server authentication requirements for outgoing email messages, including the user name and password used for authentication, if applicable.

NOTE: Consult your email service provider's documentation for information on digital sending limits for your email account. Some providers may temporarily lock your account if you exceed your sending limit.

Step one: Access the HP Embedded Web Server (EWS)

Open the EWS to start the setup process.

NOTE: The figure in this topic shows an EWS screen for a color printer. However, the procedure below is valid for both color and mono printers.

1. From the Home screen on the printer control panel, touch the Information icon , and then touch the Ethernet icon to display the IP address or host name.

2. Open a web browser, and in the address line, type the IP address or host name exactly as it displays on the printer control panel. Press the `Enter` key on the computer keyboard. The EWS opens.

NOTE: If the web browser displays a message indicating that accessing the website might not be safe, select the option to continue to the website. Accessing this website will not harm the computer.

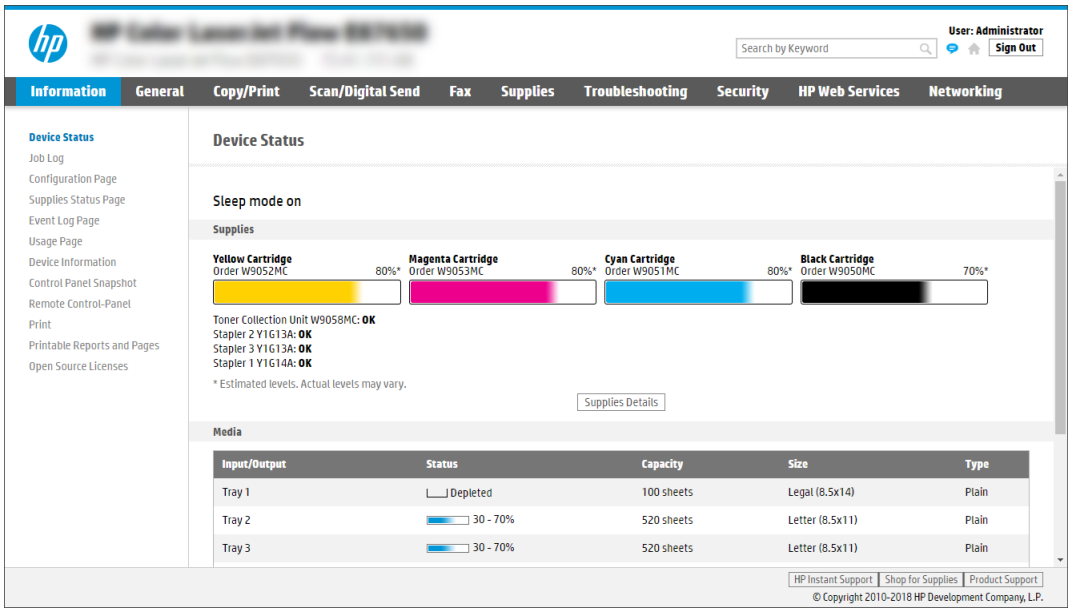

Step two: Configure the Network Identification settings

Configure advanced setting for network identification.

NOTE: Configuring email setup on the **Networking** tab is an advanced process and might require the assistance of a system administrator.

1. Using the EWS top navigation tabs, click **Networking**.

   NOTE: For configuring the network settings for use with Office 365, Step five: Set up Send to Email to use Office 365 Outlook (optional) on page 80

2. In the left navigation pane, click **TCP/IP Settings**. A username/password might be required to access the **Network Identification** tab of the EWS.

3. On the **TCP/IP Settings** dialog, click the **Network Identification** tab.

4. If DNS is required on the network, in the **TCP/IP Domain Suffix** area, verify that the DNS suffix for the email client being used is listed. DNS suffixes have this format: *companyname.com*, *gmail.com*, etc.

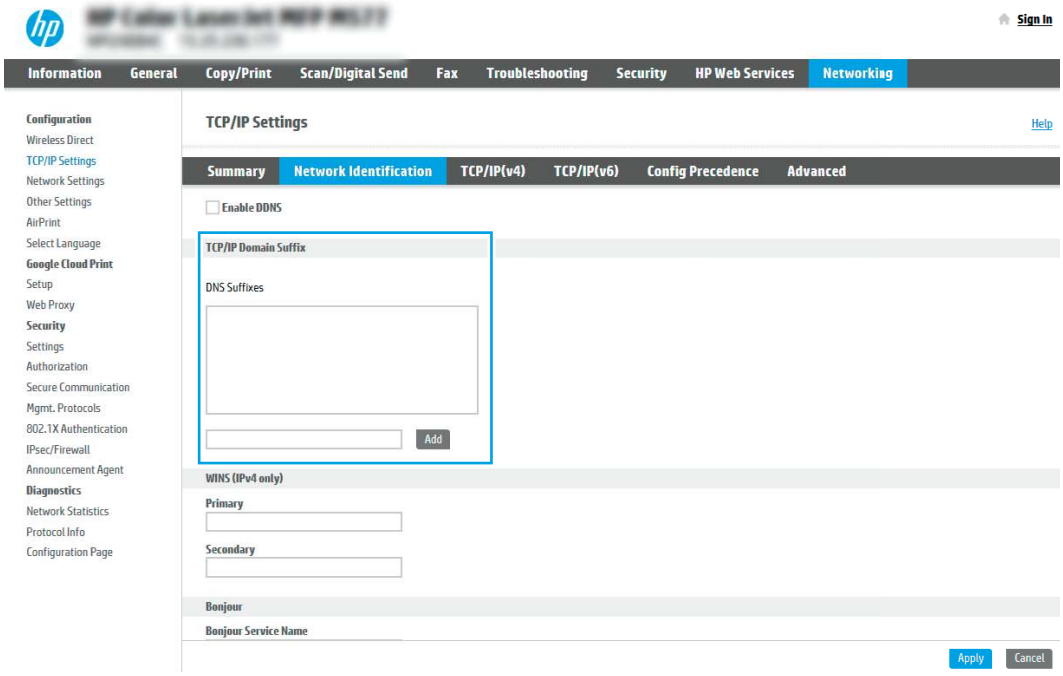

   NOTE: If the Domain Name suffix is not set up, use the IP address.

5. Click **Apply**.

6. Click **OK**.

Step three: Configure the Send to Email feature

The two options for configuring Send to Email are the **Email Setup Wizard** for basic configuration and **Email Setup** for advanced configuration. Use the following options to configure the Send to Email feature:

Method one: Basic configuration using the Email Setup Wizard

Perform basic configuration using the Email Setup Wizard.

This option opens the **Email Setup Wizard** in the HP Embedded Web Server (EWS) for basic configuration.

1. Using the EWS top navigation tabs, click **Scan/Digital Send**.
2. In the left navigation pane, click **Email and Scan to Network Folder Quick Setup Wizards**.
3. In the **Email and Scan to Network Folder Quick Setup Wizards** dialog, click the **Email Setup** link.

NOTE: If a message displays indicating that the Scan to Email feature is disabled, click **Continue** to proceed with the configuration and enable the Scan to Email feature upon completion.

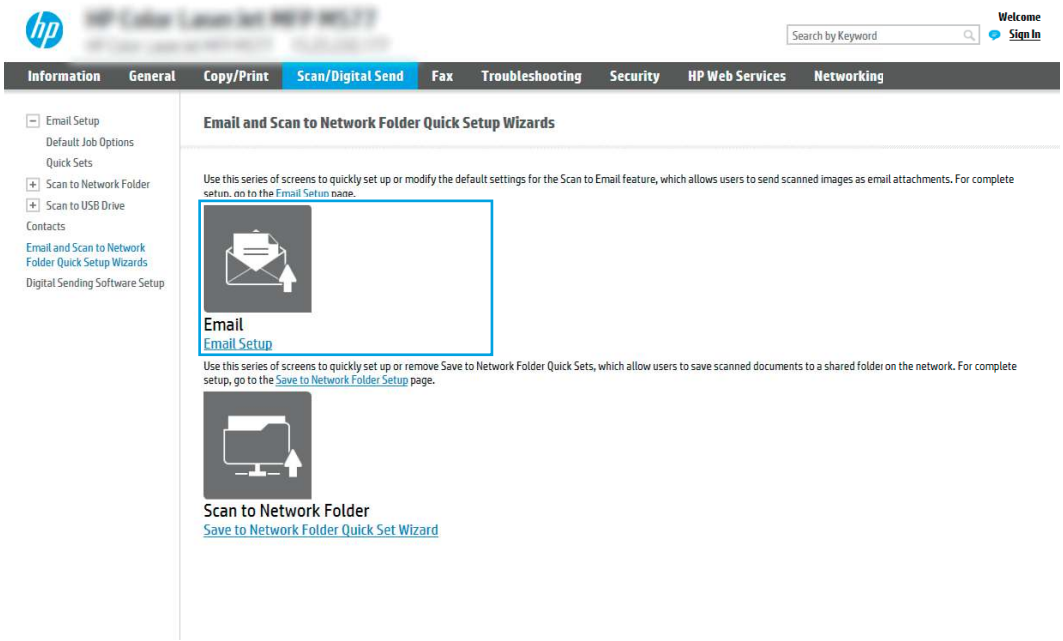

4. On the **Configure Email Servers (SMTP)** dialog, select one of the following options and complete the steps:
   - Option one: Use a server already in use by Email.

     Select **Use a server already in use by Email**, and then click **Next**.
   - Option two: Search the network for the outgoing email server.

     This option finds outgoing SMTP servers inside your firewall only.

     a. Select **Search network for outgoing email server**, and then click **Next**.

     b. Select the appropriate server from the **Configure Email Server (SMTP)** list, and then click **Next**.

     c. Select the option that describes the server's authentication requirements:

     – Server does not require authentication: Select **Server does not require authentication**, and then click **Next**.

-OR-

- Server requires authentication: From the drop-down list, select an authentication option:
  - Select **Use credentials of user to connect after Sign In at the control panel**, and then click **Next**.

    -OR-

  - Select **Always use these credentials**, enter the **User name** and **Password**, and then click **Next**.

- Option three: Add the SMTP server.

  a. Select **Add SMTP server**.

  b. Enter the **Server Name** and **Port Number**, and then click **Next**.

  NOTE: In most cases, the default port number does not need to be changed.

  NOTE: If you are using a hosted SMTP service such as Gmail, verify the SMTP address, port number, and SSL settings from the service provider's website or other sources. Typically, for Gmail, the SMTP address is smtp.gmail.com, port number 465, and the SSL should be enabled.

  Please refer to online sources to confirm these server settings are current and valid at the time of configuration.

  c. Select the appropriate server authentication option:

  - Server does not require authentication: Select **Server does not require authentication**, and then click **Next**.

    -OR-

  - Server requires authentication: Select an option from the **Server requires authentication** drop-down list:
    - Select **Use credentials of user to connect after Sign In at the control panel**, and then click **Next**.

      -OR-

    - Select **Always use these credentials**, enter the **User name** and **Password**, and then click **Next**.

5. On the **Configure Email Settings** dialog, enter the following information about the sender's email address, and then click **Next**.

NOTE: When setting up the **From**, **Subject**, and **Message** fields, if the **User editable** check box is unchecked, users will not be able to edit those fields at the printer control panel when sending an email.

Table 6-1 **Send email settings**

Option	Description
From (Required)	Select one of the following options from the **From** drop-down list: • **User's address (sign-in required)** • **Default From**: Enter a default email address and display name in the **Default From Email Address** and **Default Display Name** fields NOTE: Create an email account for the printer, and use this address for the default email address. NOTE: Configure the email feature so that users must sign in before using it. This prevents users from sending an email from an address that is not their own.
Subject (Optional)	Provide a default subject line for the email messages.
Message (Optional)	Create a custom message. To use this message for all emails sent from the printer, clear the **User editable** check box for **Message**.

6. In the **Configure File Scan Settings** area, set the default scanning preferences, and then click **Next**.

Table 6-2 **Scan settings**

Option	Description
File Type	Select the default file type for the scanned document: • **PDF** • **JPEG** • **TIFF** • **MTIFF** • **XPS** • **PDF/A** HP LaserJet Enterprise Flow MFP printers or MFP printers that are connected to a digital send software (DSS) server also support the following OCR file types: • **Text (OCR)** • **Unicode Text (OCR)** • **RTF (OCR)** • **Searchable PDF (OCR)** • **Searchable PDF/A (OCR)** • **HTML (OCR)** • **CSV (OCR)**

Table 6-2 Scan settings (continued)

Option	Description
Color/Black	Select the default color setting for the scanned document: • Color • Black • Black/Gray • Automatically detect
Quality and File Size	Select the default output quality for the scanned document: • Low (small file) • Medium • High (large file)
Resolution	Select the default scan resolution for the scanned document: • 75 dpi • 150 dpi • 200 dpi • 300 dpi • 400 dpi • 600 dpi

7. Review the **Summary** area, and then click **Finish** to complete the setup.

Method two: Advanced configuration using the Email Setup

Use the following steps for advanced configuration using the **E-mail Setup** dialog in the EWS.

1. Using the EWS top navigation tabs, click **Scan/Digital Send**, expand the **Email Setup** menu in the left navigation pane, and then click **Default Job Options**.

   The **Default Job Options** page displays the **Basic Settings** for Scan to Email setup. To access additional settings, click the **Advanced Settings** button at the bottom of the page. To switch back to basic settings, click the **Basic Settings** button.

NOTE: This procedure covers the steps for **Basic Settings** first and then the steps for **Advanced Settings**.

Figure 6-1 Location of Advanced Settings button

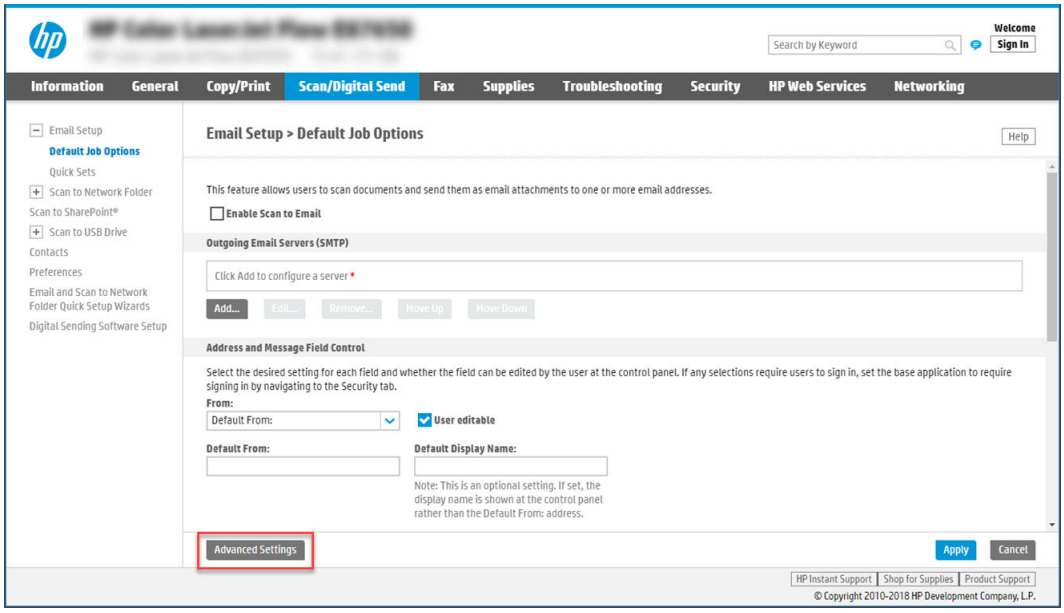

2. On the **Default Job Options** page, select the **Enable Scan to Email** check box. If this check box is not selected, the feature is unavailable at the printer control panel.

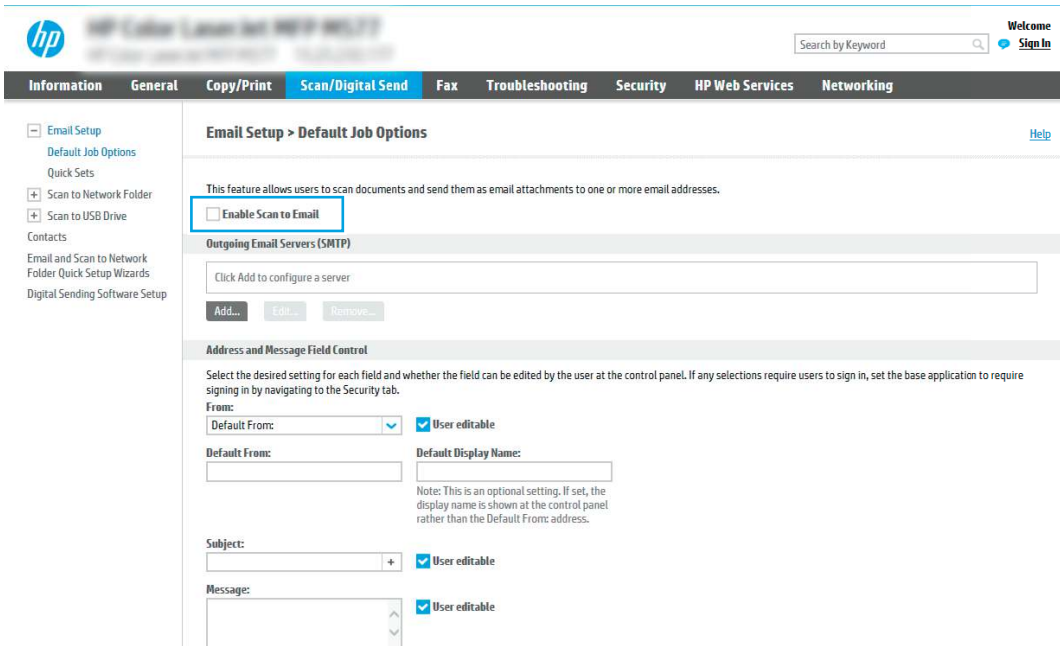

3. In the **Outgoing Email Servers (SMTP)** area, complete the steps for one of the following options:

- Select one of the displayed servers.
- Click **Add** to start the SMTP wizard.

  a. In the SMTP wizard, select one of the following options:

     – **Option one: I know my SMTP server address or host name**: Enter the address of an SMTP server, and then click **Next**

- **Option two:** If you do not know the address of the SMTP server, select **Search network for outgoing email server**, and then click **Next**. Select the server, and then click **Next**.

NOTE: If an SMTP server was already created for another printer function, the **Use a server already in use by another function** option displays. Select this option, and then configure it to be used for the email function.

b. On the **Set the basic information necessary to connect to the server** dialog, set the options to use, and then click **Next**.

   - Some servers have problems sending or receiving emails that are larger than 5 megabytes (MB). These problems can be prevented by entering a number in **Split emails if larger than (MB)**.
   - In most cases, the default port number does not need to be changed. However, when using the Enable SMTP SSL Protocol option, port 587 must be used.
   - If you are using Google™ Gmail for email service, select the **Enable SMTP SSL Protocol** check box. Typically, for gmail, the SMTP address is smtp.gmail.com, port number 465, and the SSL should be enabled. Refer to online sources to confirm these server settings are current and valid at the time of configuration.

c. On the **Server Authentication Requirements** dialog, select the option that describes the server's authentication requirements:

   - **Server does not require authentication**, and then click **Next**.
   - **Server requires authentication**
     - From the drop-down box, select **Use credentials of user to connect after Sign In at the control panel**, and then click **Next**.
     - From the drop-down box, select **Always use these credentials**, enter the **Username** and **Password**, and then click **Next**.

NOTE: If using a signed-in user's credentials, set email to require sign in by the user on the printer control panel. Deny device guest access to email by clearing the check box for email in the **Device Guest** column in the **Sign in and Permission Policies** area on the **Access Control** dialog of the **Security** tab. The icon in the check box changes from a check mark to a lock.

d. On the **Server Usage** dialog, choose the printer functions that will send email through this SMTP server, and then click the **Next** button.

   If the server requires authentication, a user name and password for sending automatic alerts and reports from the printer will be required.

e. On the **Summary and Test** dialog, enter a valid email address in the **Send test email to:** field, and then click **Test**.

f. Verify that all of the settings are correct, and then click **Finish** to complete the outgoing email server set up.

4. In the **Address and Message Field Control** area, enter a **From:** setting and any of the other optional settings.

Table 6-3 Address and Message Field Control (Basic Settings)

Feature	Description
User editable	To use the **Default From** address and **Default Display Name** for all emails sent from this printer (unless a user is signed in), clear the **User editable** check box. When setting up the address fields, if the **User editable** check box is cleared, users will not be able to edit those fields at the printer control panel when sending an email. For send-to-me functionality, clear the **User editable** check boxes for all of the address fields, including the **From:**, **To:**, **CC:**, and **BCC:** fields, and then set that user's send email **From:** their own email address and **To:** their own email address.
Default From: and **Default Display Name:**	Provide an email address and name to use for the **From:** address for the email message. NOTE: Create an email account for the printer, and use this address for the default email address. NOTE: Configure the email feature so that users must sign in before using it. This prevents users from sending an email from an address that is not their own.
Subject:	Provide a default subject line for the email messages.
Message:	Create a custom message. To use this message for all emails sent from the printer, clear or do not select the **User editable** check box for **Message:**.

Table 6-4 Address and Message Field Control (Advanced Settings - optional)

Feature	Description
Address Field Restrictions	Specify whether users must select an email address from an address book or whether users are allowed to enter in an email address manually. CAUTION: If **Users must select from address book** is selected, and any of the address fields are also set as **User editable**, changes to those editable fields also change the corresponding values in the address book. To prevent users from changing contacts in the Address Book at the printer control panel, go to the **Access Control** page on the **Security** tab, and deny **Device Guest** access to address book modifications.
Allow invalid email address formats	Select to allow an invalid email address format.
To:	Provide a To (recipient) email address for emails.
CC:	Provide a CC email address for emails.
BCC:	Provide a BCC email address for emails.

5. In the **File Settings** area, set the default file settings preferences.

Table 6-5 File Settings (Basic Settings)

Feature	Description
File Name	Default file name for the file to be saved. Select the **User editable** check box to make this setting editable at the printer control panel.

Table 6-5 File Settings (Basic Settings) (continued)

Feature	Description
File Type	Select the file format for the saved file. Select the **User editable** check box to make this setting editable at the printer control panel.
Resolution	Set the resolution for the file. Higher resolution images have more dots per inch (dpi), so they show more detail. Lower resolution images have fewer dots per inch and show less detail, but the file size is smaller.
Quality and File Size	Select the quality for the file. Higher-quality images require a larger file size than lower-quality images, and they take more time to send.
Color/Black	Specify whether copies are to be printed in color, black and gray, or black only (color printers only).

Table 6-6 File settings (Advanced Settings - optional)

Feature	Description
File Name Prefix	Set the default file name prefix used for files saved to a network folder.
File Name Suffix	Set the default file name suffix used for files saved to a network folder. Duplicate filename suffix default [filename]_YYYYMMDDT
File Name Preview	Enter a file name, and then click the **Update Preview** button.
File Numbering Format	Select a file name format for when the job is divided into multiple files.
Add numbering when job has just one file (ex. _1-1)	Select this setting to add numbering to a file name when the job is only one file instead of multiple files.
High Compression (smaller file)	Select this setting to compress the scanned file, which reduces the file size. However, the scanning process for a High compression file might take longer than for a Normal compression file.
PDF encryption	If the file type is PDF, then this option encrypts the output PDF file. A password must be specified as part of the encryption. The same password must be used to open the file. The user will be prompted to enter a password prior to scanning their job if one has not been set prior to pressing start.
Suppress blank pages	If the **Suppress blank pages** option is enabled, blank pages will be ignored.
Create Multiple Files	Select this setting to scan pages into separate files based on a predetermined maximum number of pages per file.

6. Click the **Advanced Settings** button to display the following settings:
   - **Signing and Encryption**
   - **Notification** (job notification)
   - **Scan Settings**

7. In the **Signing and Encryption** area, set the signing and encryption preferences.

Table 6-7 Signing and Encryption settings

Feature	Description
Signing	Select whether to sign the email with a security certificate. Select the **User editable** check box to make this setting editable at the printer control panel.
Hashing Algorithm	Select the algorithm to use for signing the certificate.
Encryption	Select whether to encrypt the email. Select the **User editable** check box to make this setting editable at the printer control panel.
Encryption Algorithm	Select the algorithm to use for encrypting the email.
Attribute for Recipient Public Key	Enter which attribute to use to retrieve the recipient's public key certificate from LDAP.
Use the recipient public key certificate to verify the recipient	Select this setting to use the recipient's public key certificate to verify the recipient.

8. In the **Notification** area, select when users will receive notifications about sent emails. The default setting is using the signed in user's email address. If the recipient email address is blank, no notification is sent.

9. In the **Scan Settings** area, set the default scanning preferences.

Table 6-8 Scan Settings

Feature	Description
Original Size	Select the page size of the original document.
Original Sides	Select whether the original document is single-sided or double-sided.
Optimize Text/Picture	Select to optimize the output of a particular type of content.
Content Orientation	Select the way the content of the original document is placed on the page: **Portrait** or **Landscape**.
Background Cleanup	Select a value to remove faint images from the background or to remove a light background color.
Darkness	Select a value to adjust the darkness of the file.
Contrast	Select a value to adjust the contrast of the file.
Sharpness	Select a value to adjust the sharpness of the file.
Image Preview	Select whether to require or make optional a displayed preview of the job or to disable a preview.
Cropping Options	Select whether or not to allow a job to be cropped and the type of cropping option.
Erase Edges	Select this setting to specify the width of edge margins to be erased, in either inches or millimeters, for the front side and back side of a job.

10. Review the selected options to verify that they are accurate, and then click **Apply** to complete the setup.

Step four: Configure the Quick Sets (optional)

Quick Sets are optional short-cut jobs that can be accessed on the main Home screen or within the Quick Sets application at the printer. Use the following procedure to configure the Quick Sets.

1. In the **Email Setup** area of the left navigation pane, click **Quick Sets**.
2. Select one of the following options:
   - Select an existing Quick Set under Quick Sets Application in the table.

     -OR-

   - Click **Add** to start the Quick Set Wizard.
3. If you selected **Add**, the **Quick Sets Setup** page opens. Complete the following information:
   - **Quick Set Name**: Enter a title for the new Quick Set.
   - **Quick Set Description**: Enter a description of the Quick Set.
   - **Quick Set Start Option**: To set how the Quick Set starts, click either **Enter application, then user presses Start** or **Start instantly when selected from the Home Screen**.
4. Define the following settings for the Quick Set: Address and Message Field Control, Signing and Encryption, Notification, Scan Settings, File Settings.
5. Click **Finish** to save the Quick Set.

Step five: Set up Send to Email to use Office 365 Outlook (optional)

Enable the printer to send an email with an Office 365 Outlook account from the control panel.

Introduction

Microsoft Office 365 Outlook is a cloud-based email system provided by Microsoft which uses Microsoft's Simple Mail Transfer Protocol (SMTP) server to send or receive emails. Complete the following to enable the printer to send an email with an Office 365 Outlook account from the control panel.

NOTE: You must have an email address account with Office 365 Outlook to configure the settings in the EWS.

Configure the outgoing email server (SMTP) to send an email from an Office 365 Outlook account

Configure the outgoing email server using the following procedure.

1. Using the EWS top navigation tabs, click **Networking**.
2. In the left navigation pane, click **TCP/IP Settings**.
3. In the **TCP/IP Settings** area, click the **Network Identification** tab.

4. If DNS is required on the network, in the **TCP/IP Domain Suffix** area, verify that the DNS suffix for the email client being used is listed. DNS suffixes have this format: *companyname.com*, *Gmail.com*, etc.

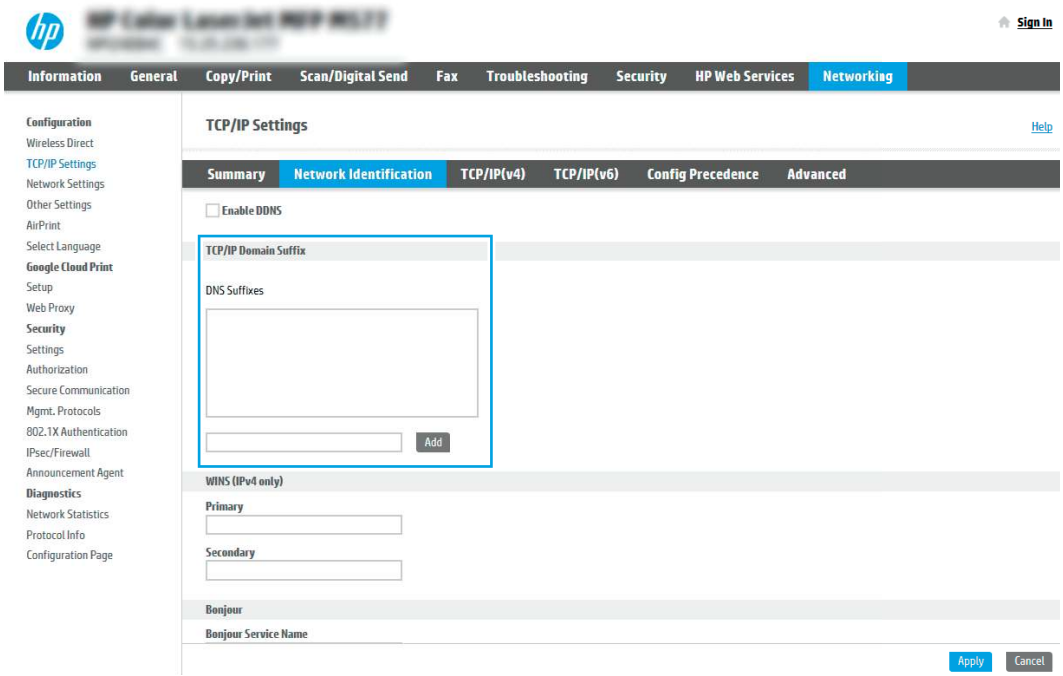

NOTE: If the Domain Name suffix is not set up, use the IP address.

5. Click **Apply**.

6. Click the **Scan/Digital Send** tab.

7. On the left navigation pane, click **Email Setup**.

8. On the Email Setup page, select the **Enable Scan to Email** check box. If this check box is not available, the feature is unavailable at the printer control panel.

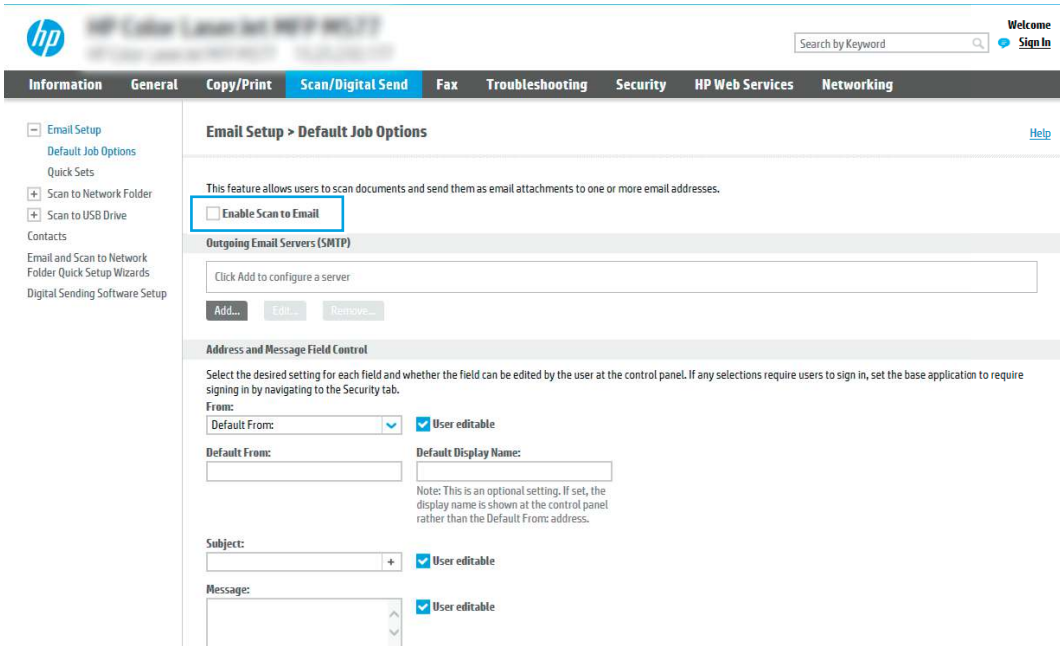

9. In the **Outgoing Email Servers (SMTP)** area, click **Add** to start the SMTP wizard.

10. In the **I know my SMTP server address or host name** field, type `smtp.onoffice.com`, and then click **Next**.

11. On the **Set the basic information necessary to connect to the server** dialog, in the **Port Number** field, type `587`.

NOTE: Some servers have problems sending or receiving emails that are larger than 5 megabytes (MB). These problems can be prevented by entering a number in **Split emails if larger than (MB).**

12. Select the **Enable SMTP SSL Protocol** check box, and then click **Next**.

13. On the **Server Authentication Requirements** dialog, complete the following information:

    a. Select **Server requires authentication**.

    b. From the drop-down list, select **Always use these credentials**.

    c. In the **Username** field, type the Office 365 Outlook email address.

    d. In the **Password** field, type the Office 365 Outlook account password, and then click **Next**.

14. On the **Server Usage** dialog, choose the printer functions that will send email through this SMTP server, and then click the **Next** button.

15. On the **Summary and Test** dialog, enter a valid email address in the **Send a test email to:** field, and then click **Test**.

16. Verify that all of the settings are correct, and then click **Finish** to complete the outgoing email server setup.

For more information, go to Microsoft's Support page.

Set up Scan to Network Folder

Set up the Scan to Folder feature to scan documents directly to network folder.

Introduction

This section explains how to enable and configure the Scan to Network Folder function. The printer has a feature that enables it to scan a document and save it to a network folder. To use this scan feature, the printer must be connected to a network; however, the feature is not available until it has been configured. There are two methods for configuring Scan to Network Folder, the **Save to Network Folder Setup Wizard** for basic setup and **Save to Network Folder Setup** for advanced setup.

Before you begin

Have the following items available before you set up the Scan to Network feature.

NOTE: To set up the Scan to Network Folder feature, the printer must have an active network connection.

Administrators need the following items before beginning the configuration process.

- Administrative access to the printer.
- The fully-qualified domain name (FQDN) (e.g., \\servername.us.companyname.net\scans) of the destination folder OR the IP address of the server (e.g., \\16.88.20.20\scans).

NOTE: The use of the term "server" in this context refers to the computer where the shared folder resides.

Step one: Access the HP Embedded Web Server (EWS)

Open the EWS to start the setup process.

NOTE: The figure in this topic shows an EWS screen for a color printer. However, the procedure below is valid for both color and mono printers.

1. From the Home screen on the printer control panel, touch the Information icon , and then touch the Ethernet icon to display the IP address or host name.
2. Open a web browser, and in the address line, type the IP address or host name exactly as it displays on the printer control panel. Press the `Enter` key on the computer keyboard. The EWS opens.

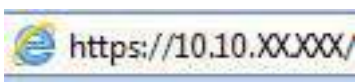

NOTE: If the web browser displays a message indicating that accessing the website might not be safe, select the option to continue to the website. Accessing this website will not harm the computer.

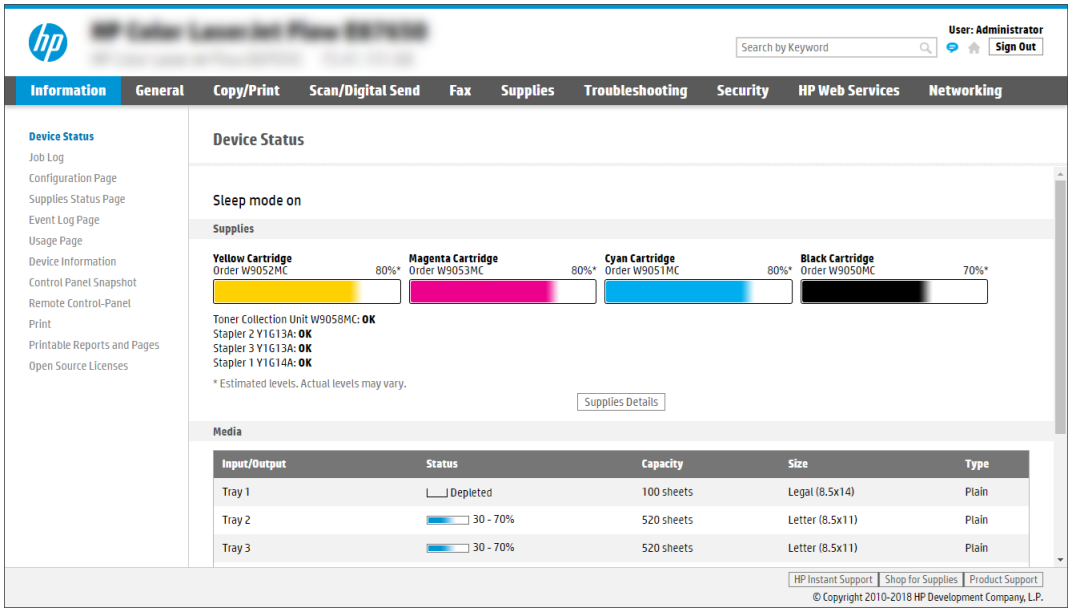

Step two: Set up Scan to Network Folder

Set up Scan to Network Folder using one of the following methods.

Method one: Use the Scan to Network Folder Wizard

Use this option for basic configuration of the Save to Network Folder feature using the Scan to Network Folder wizard.

NOTE: Before you begin: To display the printer's IP address or host name, touch the Information icon , and then touch the Network icon on the printer's control panel.

1. Using the EWS top navigation tabs, click **Scan/Digital Send** tab. The **Email and Scan to Network Folder Quick Setup Wizards** dialog opens.
2. In the left navigation pane, click **Email and Scan to Network Folder Quick Setup Wizards**.
3. Click the **Save to Network Folder Quick Set Wizard** link.
4. On the **Add or Remove a Save to Network Folder Quick Set** dialog, click **Add**.

   NOTE: Quick Sets are shortcut jobs that can be accessed on the printer Home screen or within the Quick Sets application.

   NOTE: The Save to Network Folder feature can be minimally configured without creating a quick set. However, without the Quick Set, users must enter the destination folder information at the control panel for each scan job. A quick set is required to include Save to Network Folder metadata.

5. On the **Add Folder Quick Set** dialog, complete the following information:

   a. In the **Quick Set Title** field, type a title.

      NOTE: Name the Quick Set something that users can understand quickly (e.g., "Scan and save to a folder").

   b. In the **Quick Set Description** field, type a description explaining what the Quick Set will save.

c. Click **Next**.

6. On the **Configure Destination Folder** dialog, complete the following information:

   a. In the **UNC Folder Path** field, type a folder path where the scan will go.

      The folder path can either be the fully-qualified domain name (FQDN) or the IP address of the server. Be sure that the folder path (e.g., `\scans`) follows the FQDN or IP address.

      FQDN example: `\\servername.us.companyname.net\scans`

      IP address example: `\\16.88.20.20\scans`

      NOTE: The FQDN can be more reliable than the IP address. If the server gets its IP address via DHCP, the IP address can change. However, the connection with an IP address might be faster because the printer does not need to use DNS to find the destination server.

   b. From the **Authentication Settings** drop-down, select one of the following options:

      - **Use credentials of user to connect after Sign In at the control panel**
      - **Always use these credentials**

      NOTE: If **Always use these credentials** is selected, a user name and password must be entered in the corresponding fields, and the printer's access to the folder must be verified by clicking **Verify Access**.

   c. In the **Windows Domain** field, type the Windows domain.

      TIP: To find the Windows domain in Windows 7, click **Start**, click **Control Panel**, click **System**.

      To find the Windows domain in Windows 8, click **Search**, enter `System` in the search box, and then click **System**.

      The domain is listed under **Computer name, domain, and workgroup settings**.

   d. Click **Next**.

7. On the **Configure File Scan Settings** dialog, set the default scanning preferences for the Quick Set, and then click **Next**.

8. Review the **Summary** dialog, and then click **Finish**.

Method two: Use Scan to Network Folder Setup

This option enables advanced configuration of the Save to Network Folder feature using the HP Embedded Web Server (EWS) for the printer.

NOTE: Before you begin: To display the printer's IP address or host name, touch the Information icon , and then touch the Network icon on the printer's control panel.

Step one: Begin the configuration

Use the following steps to begin Scan to Network Folder setup.

1. Click the **Scan/Digital Send** tab.

2. In the left navigation pane, click **Scan to Network Folder Setup**.

Step two: Configure the Scan to Network Folder settings

Use the following procedure to complete Scan to Network Folder setup.

Step one: Begin the configuration

Use the following steps to begin configuration.

1. On the Scan to Network Folder Setup page, select the **Enable Scan to Network Folder** check box. If this box is not selected, the feature is unavailable at the printer control panel.
2. In the Scan to Network Folder area of the left navigation pane, click **Quick Sets**. Click **Add** to open the **Quick Sets Setup** dialog.

NOTE: Quick Sets are shortcut jobs that can be accessed on the printer Home screen or within the Quick Sets application.

NOTE: The Scan to Network Folder feature can be minimally configured without creating a Quick Set. However, without the Quick Set, users must enter the destination folder information at the control panel for each scan job. A Quick Set is required to include Scan to Network Folder metadata.

Complete all of the settings in the Quick Set Setup to fully configure the Scan to Network Folder feature.

Dialog one: Set the Quick Set name, description, and options for user interaction at the control panel

Set the Quick Set details for user interaction at the printer's control panel.

Use the **Set the button location for the Quick Set and options for user interaction at the control panel** dialog to configure where the **Quick Set** button will display on the printer control panel and to configure the level of user interaction at the printer control panel.

1. In the **Quick Set Name** field, type a title.

NOTE: Name the Quick Set something that users can understand quickly (e.g., "Scan and save to a folder").

2. In the **Quick Set Description** field, type a description explaining what the Quick Set will save.
3. From the **Quick Set Start Option** list, select one of the following options:
   - Option one: **Enter application, then user presses Start**.
   - Option two: **Start instantly upon selection**.

     Select one of the following prompt options :

     - **Prompt for original sides**
     - **Prompt for additional pages**
     - **Require Preview**

     NOTE: If **Start instantly upon selection** is selected, the destination folder must be entered in the next step.
4. Click **Next**.

Dialog two: Folder Settings

Use the **Folder Settings** dialog to configure the types of folders the printer sends scanned documents to and the folder permissions.

There are two types of destination folders to select from:

- Shared folders or FTP folders
- Personal shared folders

There are two types of folder permissions to select from:

- Read and write access
- Write access only

Configure the destination folder for scanned documents

Select one of the following options to set up a destination folder.

Option 1: Configure the printer to save to a shared folder or FTP folder

To save scanned documents to a standard shared folder or an FTP folder, complete the following steps.

1. If it is not already selected, select **Save to shared folders or FTP folders**.
2. Click **Add...**. The **Add Network Folder Path** dialog opens.
3. On the **Add Network Folder Path** dialog, select one of the following options:
   - Option one: **Save to a standard shared network folder**.

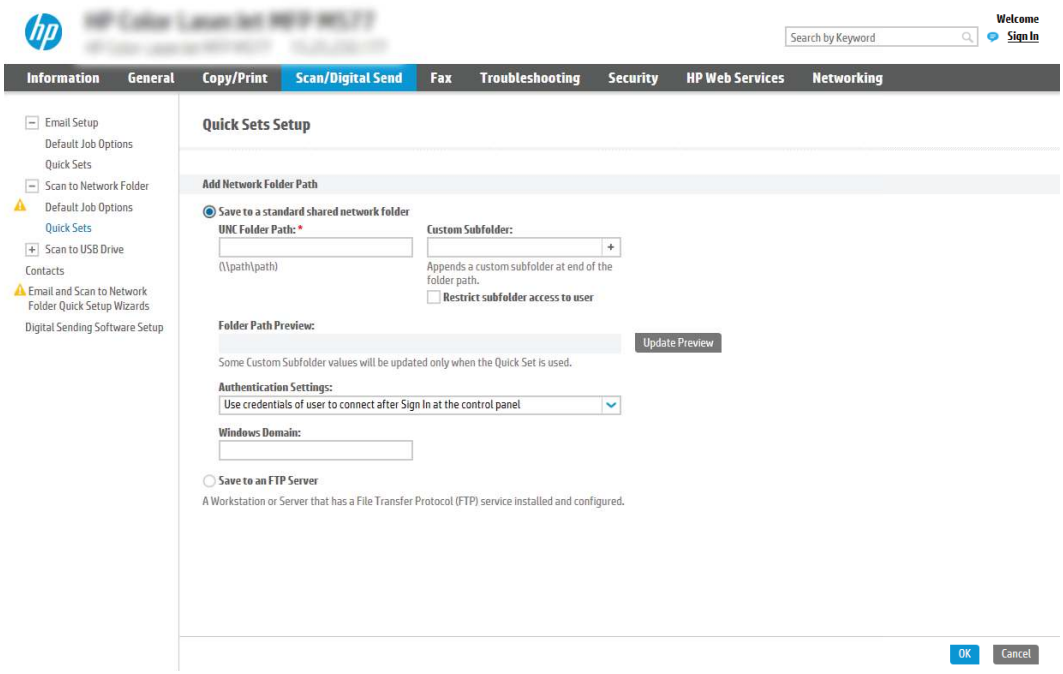

   a. If it is not already selected, select **Save to a standard shared network folder**.

   b. In the **UNC Folder Path** field, type a folder path.

The folder path can either be the fully-qualified domain name (FQDN) or the IP address of the server. Be sure that the folder path (e.g., `\scans`) follows the FQDN or IP address.

FQDN example: `\\servername.us.companyname.net\scans`

IP address example: `\\16.88.20.20\scans`

NOTE: The FQDN can be more reliable than the IP address. If the server gets its IP address via DHCP, the IP address can change. However, the connection with an IP address might be faster because the printer does not need to use DNS to find the destination server.

c. To automatically create a subfolder for scanned documents in the destination folder, select a format for the subfolder name from the **Custom Subfolder** list.

   To restrict the subfolder access to the user who creates the scan job, select **Restrict subfolder access to user**.

d. To view the complete folder path for scanned documents, click **Update Preview**.

e. From the **Authentication Settings** list, select one of the following options:

   – **Use credentials of user to connect after Sign In at the control panel**

   – **Always use these credentials**

NOTE: If **Always use these credentials** is selected, a user name and password must be entered in the corresponding fields.

f. In the **Windows Domain** field, type the Windows domain.

NOTE: To find the Windows domain in Windows 7, click **Start**, click **Control Panel**, click **System**.

   To find the Windows domain in Windows 8, click **Search**, enter `System` in the search box, and then click **System**.

   The domain is listed under **Computer name, domain, and workgroup settings**.

NOTE: If a shared folder is set to be accessed by everyone, values for a workgroup name (default is "Workgroup"), a user name, and password must be entered in the corresponding fields. However, if the folder is within a particular user's folders and not Public, the user name and password of that user must be used.

NOTE: An IP address might be necessary instead of a computer name. Many home routers do not handle computer names well, and there is no Domain Name Server (DNS). In this case, it is best to set up a static IP address on the shared PC to alleviate the problem of DHCP assigning a new IP address. On a typical home router, this is done by setting a static IP address that is on the same subnet, but outside the DHCP address range.

g. Click **OK**.

- Option two: **Save to an FTP Server**.

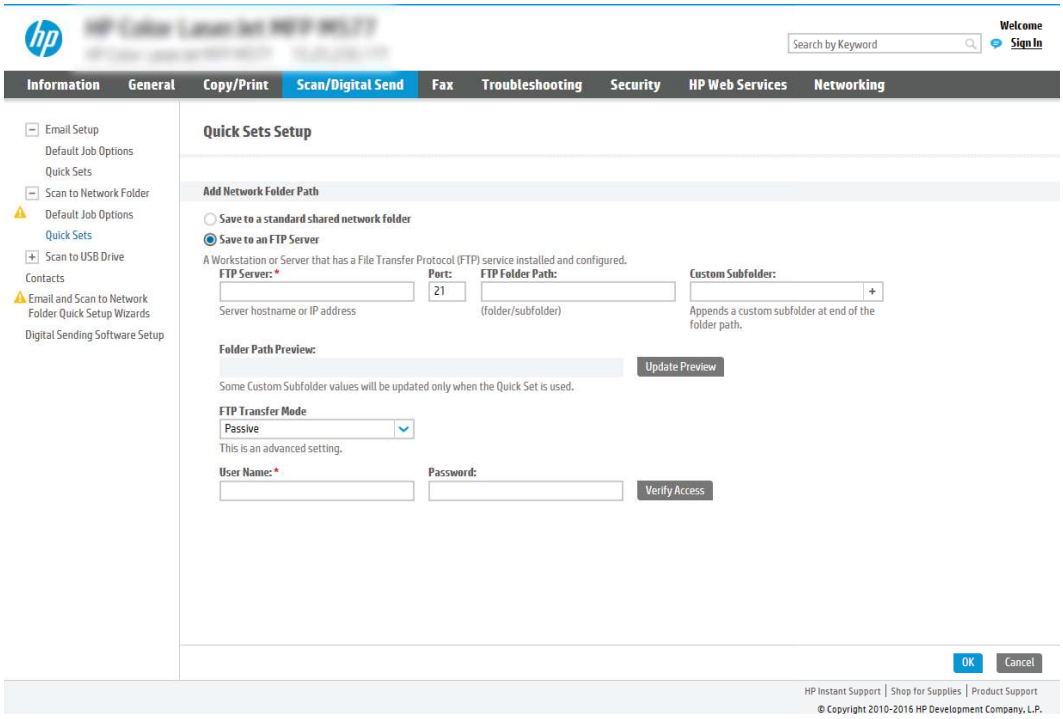

NOTE: If an FTP site is outside the firewall, a proxy server must be specified under the network settings. These settings are located in the **EWS Networking** tab, under the **Advanced** options.

a. Select **Save to an FTP Server**.

b. In the **FTP Server** field, type the FTP server name or IP address.

c. In the **Port** field, type the port number.

NOTE: In most cases, the default port number does not need to be changed.

d. To automatically create a subfolder for scanned documents in the destination folder, select a format for the subfolder name from the **Custom Subfolder** list.

e. To view the complete folder path for scanned documents, click **Update Preview**.

f. From the **FTP Transfer Mode** list, select one of the following options:

   – **Passive**

   – **Active**

g. In the **Username** field, type the user name.

h. In the **Password** field, type the password.

i. Click **Verify Access** to confirm the destination can be accessed.

j. Click **OK**.

Option 2: Configure the printer to save to a personal shared folder

To save scanned documents to a personal shared folder, complete the following steps.

NOTE: This option is used in domain environments where the administrator configures a shared folder for each user. If the Save to a personal shared folder feature is configured, users will be required to sign in at the printer control panel using Windows credentials or LDAP authentication.

1. Select **Save to a personal shared folder**.
2. In the **Retrieve the device user's home folder using this attribute** field, type the user's home folder in the Microsoft Active Directory.

   NOTE: Verify that the user knows where this home folder is located on the network.

3. To add a user name subfolder at the end of the folder path, select **Create subfolder based on user name**.

   To restrict the subfolder access to the user who creates the scan job, select **Restrict subfolder access to user**.

Select the destination folder permissions

Select one of the following options to set up destination folder permissions.

Option 1: Configure read and write access

To send scanned documents to a folder configured for read and write access, complete the following steps.

NOTE: **Send only to folders with read and write access** supports folder verification and job notification.

1. If it is not already selected, select **Send only to folders with read and write access**.
2. To require the printer to verify folder access before starting a scan job, select **Verify folder access prior to job start**.

   NOTE: Scan jobs can complete more quickly if **Verify folder access prior to job start** is not selected; however, if the folder is unavailable, the scan job will fail.

3. Click **Next**.

Option 2: Configure write access only

To send scanned documents to a folder configured for write access only, complete the following steps.

NOTE: **Allow sending to folders with write access only** does not support folder verification or job notification.

NOTE: If this option is selected, the printer cannot increment the scan filename. It sends the same filename for all scans.

Select a time-related filename prefix or suffix for the scan filename, so that each scan is saved as a unique file, and does not overwrite a previous file. This filename is determined by the information in the **File Settings** dialog in the Quick Set Wizard.

1. Select **Allow sending to folders with write access only**.
2. Click **Next**.

Dialog three: Notification Settings

Use the **Notification Settings** dialog to configure when notifications will be sent.

- On the **Notification Settings** dialog, complete one of the following tasks:

  - Option one: **Do not notify**.

    a. Select **Do not notify**.

    b. To prompt the user to review their notification settings, select **Prompt user prior to job start**, and then click **Next**.

  - Option two: **Notify when job completes**.

    a. Select **Notify when job completes**.

    b. Select the method for delivering the notification from the **Method Used to Deliver Notification** list.

    If the method of notification selected is **Email**, type the email address in the **Notification Email Address** field.

    c. To include a thumbnail of the first scanned page in the notification, select **Include Thumbnail**.

    d. To prompt the user to review their notification settings, select **Prompt user prior to job start**, and then click **Next**.

  - Option three: **Notify only if job fails**.

    a. Select **Notify only if job fails**.

    b. Select the method for delivering the notification from the **Method Used to Deliver Notification** list.

    If the method of notification selected is **Email**, type the email address in the **Notification Email Address** field.

    c. To include a thumbnail of the first scanned page in the notification, select **Include Thumbnail**.

    d. To prompt the user to review their notification settings, select **Prompt user prior to job start**, and then click **Next**.

Dialog four: Scan Settings

Complete the scan settings as follows.

On the **Scan Settings** dialog, set the default scanning preferences for the Quick Set, and then click **Next**.

Table 6-9 **Scan settings**

Feature	Description
Original Size	Select the page size of the original document.
Original Sides	Select whether the original document is single-sided or double-sided.
Optimize Text/Picture	Select to optimize for the output of a particular type of content.

Table 6-9 Scan settings (continued)

Feature	Description
Content Orientation	Select the way the content of the original document is placed on the page: **Portrait** or **Landscape**.
Background Cleanup	Select a value to remove faint images from the background or to remove a light background color.
Darkness	Select a value to adjust the darkness of the file.
Contrast	Select a value to adjust the contrast of the file.
Sharpness	Select a value to adjust the sharpness of the file.
Image Preview	Select whether to require or make optional a displayed preview of the job or to disable a preview.
Cropping Options	Select whether or not to allow a job to be cropped and the type of cropping option.
Erase Edges	Select this setting to specify the width of edge margins to be erased, in either inches or millimeters, for the front side and back side of a job.

Dialog five: File Settings

Complete the file settings as follows.

On the **File Settings** dialog, set the default file settings for the Quick Set, and then click **Next**.

Table 6-10 File settings

Feature	Description
File Name Prefix	Set the default file name prefix used for files saved to a network folder.
File Name	Default file name for the file to be saved. Select the **User editable** check box to make this setting editable at the printer control panel.
File Name Suffix	Set the default file name suffix used for files saved to a network folder.
File Name Preview	Enter a file name, and then click the **Update Preview** button.
File Numbering Format	Select a file name format for when the job is divided into multiple files.
Add numbering when job has just one file (ex. _1-1)	Select this setting to add numbering to a file name when the job is only one file instead of multiple files.
File Type	Select the file format for the saved file. Select the **User editable** check box to make this setting editable at the printer control panel.
High Compression (smaller file)	Select this setting to compress the scanned file, which reduces the file size. However, the scanning process for a High compression file might take longer than for a Normal compression file.
PDF encryption	If the file type is PDF, then this option encrypts the output PDF file. A password must be specified as part of the encryption. The same password must be used to open the file. The user will be prompted to enter a password prior to scanning their job if one has not been set prior to starting the scan.
Resolution	Set the resolution for the file. Higher resolution images have more dots per inch (dpi), so they show more detail. Lower resolution images have fewer dots per inch and show less detail, but the file size is smaller.

Table 6-10 File settings (continued)

Feature	Description
Quality and File Size	Select the quality for the file. Higher-quality images require a larger file size than lower-quality images, and they take more time to send.
Color/Black	Specify whether copies are to be printed in color, black and gray, or black only.
Suppress blank pages	If the **Suppress blank pages** option is enabled, blank pages will be ignored.
Metadata File Format	Use the drop-down list to select the file format for metadata information.
Create Multiple Files	Select this setting to scan pages into separate files based on a predetermined maximum number of pages per file.

Dialog six: Summary

On the **Summary** dialog, review the **Summary** dialog, and then click **Finish**.

Step three: Complete the configuration

Use the following steps to complete Scan to Network Folder setup.

1. In the left navigation pane, click **Scan to Network Folder**.
2. On the Scan to Network Folder page, review the selected settings, and then click **Apply** to complete the setup.

Set up Scan to SharePoint

Use Scan to SharePoint to scan documents directly to a Microsoft SharePoint site. This feature eliminates the need to scan the documents to a network folder, USB flash drive, or email message, and then manually upload the files to the SharePoint site.

Introduction

Set up the Scan to SharePoint feature, and then scan documents directly to a SharePoint site.

Scan to SharePoint supports all scanning options, including the ability to scan documents as images or use the OCR features to create text files or searchable PDFs.

The feature is disabled by default. Enable **Save to Sharepoint** in the HP Embedded Web Server (EWS).

Before you begin

Before this procedure can be completed, the destination folder that the scanned files will be saved to must exist on the SharePoint site, and write access must be enabled to the destination folder. Scan to SharePoint is disabled by default.

Step one: Access the HP Embedded Web Server (EWS)

Open the EWS to start the setup process.

NOTE: The figure in this topic shows an EWS screen for a color printer. However, the procedure below is valid for both color and mono printers.

1. From the Home screen on the printer control panel, touch the Information icon , and then touch the Ethernet icon to display the IP address or host name.

2. Open a web browser, and in the address line, type the IP address or host name exactly as it displays on the printer control panel. Press the `Enter` key on the computer keyboard. The EWS opens.

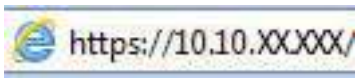

NOTE: If the web browser displays a message indicating that accessing the website might not be safe, select the option to continue to the website. Accessing this website will not harm the computer.

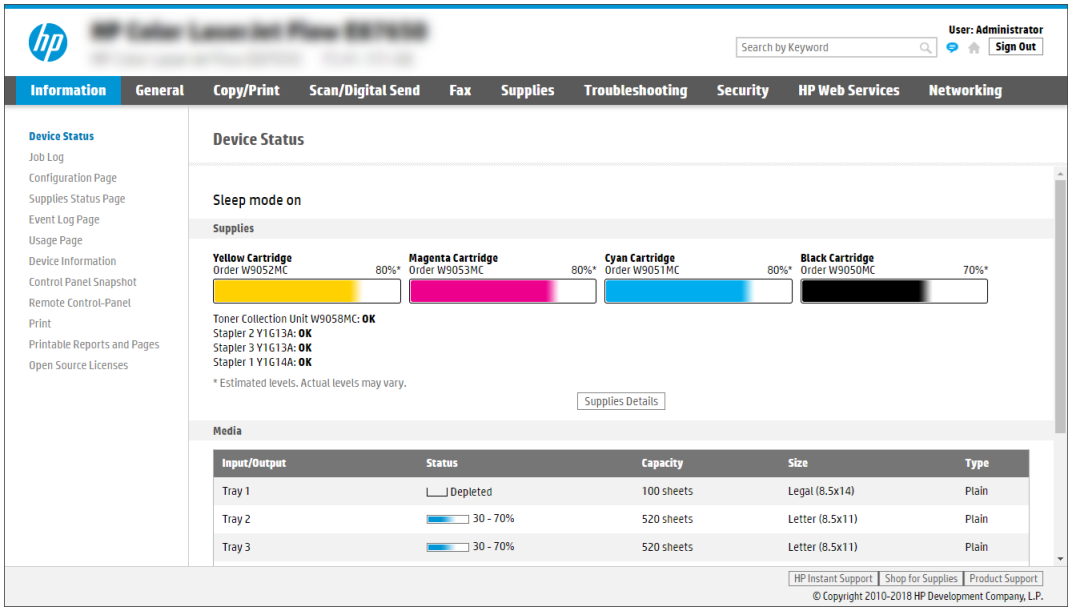

Step two: Enable Scan to SharePoint and create a Scan to SharePoint Quick Set

Follow the steps to enable the Scan to SharePoint feature and create a Scan to SharePoint Quick Set.

1. Using the top navigation tabs, click **Scan/Digital Send**.

2. In the left navigation pane, click **Scan to SharePoint®**.

NOTE: Quick Sets are shortcut jobs that can be accessed on the printer Home screen or within the **Quick Sets** application.

3. Select **Enable Scan to SharePoint®**, and then click **Apply**.

4. In the Scan to SharePoint area of the left navigation pane, click **Quick Sets**. Click **Add** to launch the Quick Set Wizard.

5. Enter a **Quick Set Name** (for example, "Scan to SharePoint") and a **Quick Set Description**.

6. Select a **Quick Set Start Option** to determine what occurs after selecting a Quick Set on the printer control panel, and then click **Next**.

7. Use the following steps to add the path to the SharePoint folder:

a. Click **Add** on the **SharePoint Destination Settings** page to open the **Add SharePoint Path** page.

b. Open another browser window, navigate to the SharePoint folder to use, and then copy the folder path for the SharePoint folder from that browser window.

c. Paste the SharePoint folder path into the **SharePoint Path:** field.

d. By default, the printer overwrites an existing file that has the same file name as the new file. Clear **Overwrite existing files** so that a new file with the same name as an existing file is given an updated time/date stamp.

e. Select an option from the **Authentication Settings** drop-down menu. Select whether it is necessary to sign in to the SharePoint site with credentials, or store the credentials within the Quick Set.

NOTE: **Use credentials of user to connect after Sign In at the control panel** is selected in the **Authentication Settings** drop-down menu, the logged-in user must have permission to write to the specified SharePoint site.

NOTE: For security purposes, the printer does not display credentials entered in the Quick Set Wizard.

f. Click **OK** to complete the SharePoint path setup, and navigate back to the SharePoint Destination Settings page.

8. Select **Verify folder access prior to job start** to ensure that the SharePoint folder specified as the destination folder is accessible each time the Quick Set is used. If this option is not selected, jobs can be saved to the SharePoint folder more quickly. However, if this option is not selected *and* the SharePoint folder is inaccessible, the job will fail.

9. Click **Next**.

10. Set a **Condition on Which to Notify** on the Notification Settings page. This setting configures the Quick Set to either not notify, or to send email messages or print a summary page if a job either completes successfully or fails. Select one of the following options from the **Condition on Which to Notify** drop-down menu:

- Select **Do not notify** for the Quick Set to not perform any notification action when a job completes successfully or fails.
- Select **Notify when job completes** to for the Quick Set to send a notification when a job completes successfully.
- Select **Notify only if job fails** to for the Quick Set to send a notification only when a job fails.

Selecting either **Notify when job completes** or **Notify only if job fails** requires the **Method Used to Deliver Notification:** to be set. Select from the following options:

- **Email**: Use this option to send an email when the selected notification condition occurs. This option requires a valid email address in the **Notification Email Address:** field.

NOTE: To use the email notification feature, first configure the email feature on the printer.

- **Print**: Use this option to print the notification when the selected notification condition occurs.

NOTE: Select **Include Thumbnail** for either notification option to include a thumbnail image of the first page of the scanned page of the job.

11. Click **Next**.

12. Select options from the Scan Settings page, and then click **Next**. For more information, see Table 6-12 Scan settings for Scan to SharePoint on page 97.

13. Select options from the **File Settings** page, and then click **Next**. For more information, see Table 6-13 File settings for Scan to SharePoint on page 98.

14. Review the summary of settings. Click **Finish** to save the Quick Set or click **Previous** to edit the settings.

Scan a file directly to a SharePoint site

Follow the steps to scan a document directly to a SharePoint site.

1. Place the document face-down on the scanner glass, or place it face-up in the document feeder and adjust the paper guides to fit the size of the document.

2. From the Home screen on the printer control panel, navigate to the Scan application, select the Scan icon, and then select Scan to SharePoint®.

   NOTE: It might be necessary to sign in to the printer to use this feature.

3. Under Quick Sets, touch Select, select a Quick Set, and then select Load.

4. Touch the File Name: text field to open a keyboard. Type the name for the file using either the on-screen keyboard or the physical keyboard, and touch the Enter button ↵.

5. Touch Options to view and configure settings for the document.

6. Touch the right pane of the screen to preview the document. In the preview screen, use the buttons on the right of the screen to adjust the preview options and to rearrange, rotate, insert, or remove pages.

   Table 6-11 **Buttons on the right side of the preview pane**

Button	Description
	Use these buttons to toggle between single-page view and thumbnail view. More options are available in thumbnail view than in single-page view.
	Use these buttons to zoom in or out on the selected page. NOTE: Select only one page at a time to use these buttons.
	Use this button to rotate the page 180 degrees. NOTE: This button is available only in the thumbnail view.

Table 6-11 Buttons on the right side of the preview pane (continued)

Button	Description
	Use this button to delete the selected pages. NOTE: This button is available only in the thumbnail view.
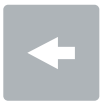 	Use these buttons to rearrange the pages within the document. Select one or more pages and move them to the left or right. NOTE: These buttons are available only in the thumbnail view.
	Use this button to add a page to the document. The printer prompts to scan additional pages.
	Use this button to clear the changes made in the preview and start over.
	Touch this button to collapse the preview screen and return to the Copy screen.

7. When the document is ready, select Send to save it to the SharePoint location.

Quick Set scan settings and options for Scan to SharePoint

Review the settings and options available in the Quick Set Wizard when adding, editing, or copying a Scan to SharePoint Quick Set.

Table 6-12 Scan settings for Scan to SharePoint

Feature	Description
Original Size	Select the page size of the original document.
Original Sides	Select whether the original document is single-sided or double-sided.
Optimize Text/Picture	Select to optimize for the output of a particular type of content.
Content Orientation	Select the way the content of the original document is placed on the page: **Portrait** or **Landscape**.
Background Cleanup	Select a value to remove faint images from the background or to remove a light background color.
Darkness	Select a value to adjust the darkness of the file.
Contrast	Select a value to adjust the contrast of the file.
Sharpness	Select a value to adjust the sharpness of the file.
Image Preview	Select whether to require or make optional a displayed preview of the job or to disable a preview.

Table 6-12 Scan settings for Scan to SharePoint (continued)

Feature	Description
Cropping Options	Select whether or not to allow a job to be cropped and the type of cropping option.
Erase Edges	Select this setting to specify the width of edge margins to be erased, in either inches or millimeters, for the front side and back side of a job.

Table 6-13 File settings for Scan to SharePoint

Feature	Description
File Name Prefix	Set the default file name prefix used for files to be saved.
File Name	Default file name for the file to be saved. Select the **User editable** check box to make this setting editable at the printer control panel.
File Name Suffix	Set the default file name suffix used for files to be saved. Duplicate filename suffix default [filename]_YYYYMMDDT
File Name Preview	Enter a file name, and then click the **Update Preview** button.
File Numbering Format	Select a file name format for when the job is divided into multiple files.
Add numbering when job has just one file (ex. _1-1)	Select this setting to add numbering to a file name when the job is only one file instead of multiple files.
File Type	Select the file format for the saved file. Select the **User editable** check box to make this setting editable at the printer control panel.
High Compression (smaller file)	Select this setting to compress the scanned file, which reduces the file size. However, the scanning process for a High compression file might take longer than for a Normal compression file.
PDF encryption	If the file type is PDF, then this option encrypts the output PDF file. A password must be specified as part of the encryption. The same password must be used to open the file. The user will be prompted to enter a password prior to scanning their job if one has not been set prior to starting the scan.
Resolution	Set the resolution for the file. Higher resolution images have more dots per inch (dpi), so they show more detail. Lower resolution images have fewer dots per inch and show less detail, but the file size is smaller.
Quality and File Size	Select the quality for the file. Higher-quality images require a larger file size than lower-quality images, and they take more time to send.
Color/Black	Specify whether copies are to be printed in color, black and gray, or black only
Suppress blank pages	If the **Suppress blank pages** option is enabled, blank pages will be ignored.
Create Multiple Files	Select this setting to scan pages into separate files based on a predetermined maximum number of pages per file.

Set up Scan to USB Drive

Enable the Scan to USB feature, which allows you to scan directly to a USB flash drive.

Introduction

The printer has a feature that enables it to scan a document and save it to a USB flash drive. The feature is not available until it has been configured through the HP Embedded Web Server (EWS).

Step one: Access the HP Embedded Web Server (EWS)

Open the EWS to start the setup process.

NOTE: The figure in this topic shows an EWS screen for a color printer. However, the procedure below is valid for both color and mono printers.

1. From the Home screen on the printer control panel, touch the Information icon , and then touch the Ethernet icon to display the IP address or host name.
2. Open a web browser, and in the address line, type the IP address or host name exactly as it displays on the printer control panel. Press the `Enter` key on the computer keyboard. The EWS opens.

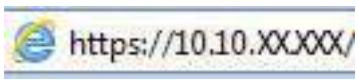

NOTE: If the web browser displays a message indicating that accessing the website might not be safe, select the option to continue to the website. Accessing this website will not harm the computer.

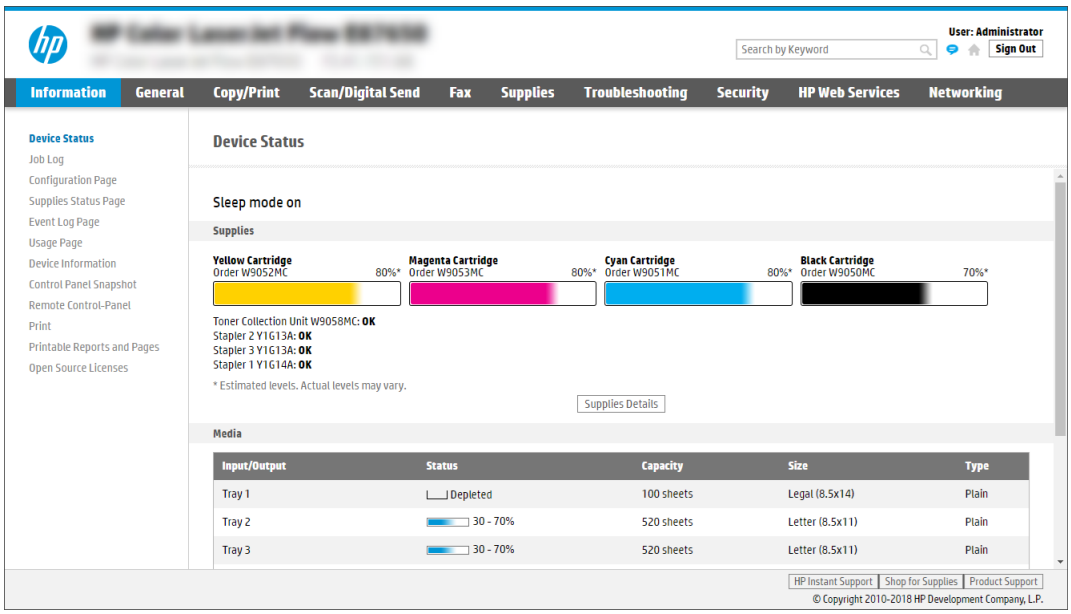

Step two: Enable Scan to USB Drive

Enable Scan to USB Drive using the following steps.

1. Select the **Security** tab.
2. Scroll to **Hardware Ports** and make sure that **Enable Host USB plug and play** is enabled.
3. Select the **Copy/Print** tab for MFP models or the **Print** tab for SFP models.

4. Select the **Enable Save to USB** check box.

5. Click **Apply** at the bottom of the page.

NOTE: Most devices ship with hard disk drives (HDDs) already installed. In some cases, additional storage devices can be added via USB. Verify whether the Save to USB feature needs to be expanded to USB and hard drive.

Step three: Configure the Quick Sets (optional)

Use the following steps to set up Quick Sets for Scan to USB Drive. Quick Sets are shortcut jobs that can be accessed on the printer Home screen or within the Quick Sets application.

1. In the **Scan to USB Drive** area of the left navigation pane, click **Quick Sets**.

2. Select one of the following options:

   - Select an existing Quick Set under **Quick Sets Application** in the table.

     -OR-

   - Click **Add** to start the Quick Set Wizard.

3. If you clicked **Add**, the Quick Sets Setup page opens. Complete the following information:

   a. **Quick Set Name**: Enter a title for the new Quick Set.

   b. **Quick Set Description**: Enter a description of the Quick Set.

   c. **Quick Set Start Option**: To set how the Quick Set starts, click either **Enter application, then user presses Start** or **Start instantly when selected from the Home Screen**.

4. Select a default location where scanned files are saved on USB storage devices inserted into the USB port on the control panel, and then click **Next**. The default location options are:

   - **Save at root directory of the USB storage device**.

   - **Create or place in this folder on the USB Storage Device** – The path to the folder on the USB storage device must be specified when using this file location option. A backslash \ must be used to separate folder\subfolder names in the path.

5. Select an option from the **Condition on Which to Notify:** drop-down list, and then click **Next**.

   This setting determines if, or how, users are notified when a Save To USB Quick Set job completes or fails. The options for the **Condition on Which to Notify:** setting are:

   - **Do not notify**

   - **Notify when job completes**

   - **Notify only if job fails**

6. Choose the **Scan Settings** for the Quick Set, and then click **Next**.

   NOTE: For more information on the available scan settings, see Default scan settings for Scan to USB Drive setup on page 101

7. Choose the **File Settings** for the Quick Set, and then click **Next**.

NOTE: For more information on the available file settings, see Default scan settings for Scan to USB Drive setup on page 101

8. Review the summary of settings, and then click **Finish** to save the Quick Set, or click **Previous** to edit the settings.

Default scan settings for Scan to USB Drive setup

Review the default settings for Scan to USB Drive setup.

Table 6-14 **Scan settings for Scan to USB Drive setup**

Feature	Description
Original Size	Select the page size of the original document.
Original Sides	Select whether the original document is single-sided or double-sided.
Optimize Text/Picture	Select to optimize for the output of a particular type of content.
Content Orientation	Select the way the content of the original document is placed on the page: **Portrait** or **Landscape**.
Background Cleanup	Select a value to remove faint images from the background or to remove a light background color.
Darkness	Select a value to adjust the darkness of the file.
Contrast	Select a value to adjust the contrast of the file.
Sharpness	Select a value to adjust the sharpness of the file.
Image Preview	Select whether to require or make optional a displayed preview of the job or to disable a preview.
Cropping Options	Select whether or not to allow a job to be cropped and the type of cropping option.
Erase Edges	Select this setting to specify the width of edge margins to be erased, in either inches or millimeters, for the front side and back side of a job.

Default file settings for Save to USB setup

Review the options for Save to USB setup.

Table 6-15 **File settings for Save to USB setup**

Option name	Description
File Name Prefix	Set the default file name prefix used for files saved to a network folder.
File Name	Default file name for the file to be saved. Select the **User editable** check box to make this setting editable at the printer control panel.
File Name Suffix	Set the default file name suffix used for files saved to a network folder. Duplicate filename suffix default [filename]_YYYYMMDDT
File Name Preview	Enter a file name, and then click the **Update Preview** button.
File Numbering Format	Select a file name format for when the job is divided into multiple files.

Table 6-15 File settings for Save to USB setup (continued)

Option name	Description
Add numbering when job has just one file (ex. _1-1)	Select this setting to add numbering to a file name when the job is only one file instead of multiple files.
File Type	Select the file format for the saved file. Select the **User editable** check box to make this setting editable at the printer control panel.
High Compression (smaller file)	Select this setting to compress the scanned file, which reduces the file size. However, the scanning process for a High compression file might take longer than for a Normal compression file.
PDF encryption	If the file type is PDF, then this option encrypts the output PDF file. A password must be specified as part of the encryption. The same password must be used to open the file. The user will be prompted to enter a password prior to scanning their job if one has not been set prior to starting the scan.
Resolution	Set the resolution for the file. Higher resolution images have more dots per inch (dpi), so they show more detail. Lower resolution images have fewer dots per inch and show less detail, but the file size is smaller.
Quality and File Size	Select the quality for the file. Higher-quality images require a larger file size than lower-quality images, and they take more time to send.
Color/Black	Specify whether copies are to be printed in color, black and gray, or black only.
Suppress blank pages	If the **Suppress blank pages** option is enabled, blank pages will be ignored.
Create Multiple Files	Select this setting to scan pages into separate files based on a predetermined maximum number of pages per file.

Scan to email

Scan a document directly to an email address or contact list. The scanned document is sent as an email message attachment.

Introduction

The printer has a feature that enables it to scan a document and send it to one or more email addresses.

Scan to email

Use the following steps to scan a document directly to an email address or contact list.

1. Place the document face-down on the scanner glass, or place it face-up in the document feeder and adjust the paper guides to fit the size of the document.
2. From the Home screen on the printer control panel, navigate to the Scan application, select the Scan icon, and then select Scan to Email.

NOTE: If prompted, type your user name and password.

3. Touch the To field to open a keyboard.

NOTE: If you are signed in to the printer, your user name or other default information might appear in the From field. If so, you might not be able to change it.

4. Specify the recipients by using one of these methods:

   - Use the keypad to enter the address in the To field.

     To send to multiple addresses, separate the addresses with a semicolon, or select the Enter button on the touchscreen keyboard after typing each address.

   - Use a contact list as follows:

     a. Select the Contacts button that is next to the To field to open the Contacts screen.

     b. Select the appropriate contact list.

     c. Select a name or names from the list of contacts to add to the recipients list, and then select Add.

5. Complete the Subject, File Name, and Message fields by touching the field and using the touchscreen keyboard to enter information. Select the Close button whenever you need to close the keyboard.

6. To load a Quick Set, select Load, select the Quick Set, and then select Load under the Quick Sets list.

NOTE: **Quick Sets** are predefined settings for various types of output, such as Text, Photograph, and High Quality. You can select a Quick Set to view the description.

7. To configure settings, such as File Type and Resolution, Original Sides, and Content Orientation, select Options in the lower left corner, and then select the settings from the Options menus. Select Done if prompted.

8. Optional Preview: Touch the right pane of the screen to preview the document. You can use the Expand and Collapse buttons on the left side of the preview pane to expand and collapse the preview screen.

   Table 6-16 **Buttons on the left side of the preview pane**

Button	Description
	Expand the preview screen.
	Collapse the preview screen.

   Use the buttons on the right of the screen to adjust the preview options and to rearrange, rotate, insert, or remove pages.

Table 6-17 **Buttons on the right side of the preview pane**

Button	Description
	Use these buttons to toggle between single-page view and thumbnail view. More options are available in thumbnail view than in single-page view.
	Use these buttons to zoom in or out on the selected page. NOTE: Select only one page at a time to use these buttons.
	Use this button to rotate the page 180 degrees. NOTE: This button is available only in the thumbnail view.
	Use this button to delete the selected pages. NOTE: This button is available only in the thumbnail view.
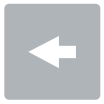	Use these buttons to rearrange the pages within the document. Select one or more pages and move them to the left or right. NOTE: These buttons are available only in the thumbnail view.
	Use this button to add a page to the document. The printer prompts to scan additional pages.
	Use this button to clear the changes made in the preview and start over.
	Touch this button to collapse the preview screen and return to the Copy screen.

9. When the document is ready, select Send to email it.

NOTE: The printer might prompt you to add the email address to the contact list.

Scan to network folder

Scan a document and save it to a folder on the network.

Introduction

The printer can scan a file and save it in a shared folder on the network.

Scan to network folder

Use this procedure to scan a document and save it to a network folder.

NOTE: You might be required to sign in to the printer to use this feature.

1. Place the document face-down on the scanner glass, or place it face-up in the document feeder and adjust the paper guides to fit the size of the document.
2. From the Home screen on the printer control panel, navigate to the Scan application, select the Scan icon, and then select Scan to Network Folder.
3. Specify a folder destination. Folder options must first be configured by the printer administrator.
   - To select a folder location that the administrator already set up, select Load under Quick Sets and Defaults, select the folder, and then select Load.
   - To specify a new folder location, touch the Folder Paths field to open a touchscreen keyboard, type the path to the folder, and then select the Enter button ↵. Enter user credentials if prompted and then select Save to save the path.

     NOTE: Use this format for the path: `\\server\folder`, where "server" is the name of the server that hosts the shared folder, and "folder" is the name of the shared folder. If the folder is nested inside other folders, complete all necessary segments of the path to reach the folder. For example: `\\server\folder\folder`

     NOTE: The Folder Paths field might have a pre-defined path, and it might not be editable. In this situation, the administrator has configured this folder for common access.
4. Touch the File Name text field to open a touchscreen keyboard, type the name for the file, and then select the Enter button ↵.
5. To configure settings, such as File Type and Resolution, Original Sides, and Content Orientation, select Options in the lower left corner, and then select the settings from the Options menus. Select Done for each setting if prompted.
6. Optional Preview: Touch the right pane of the screen to preview the document. You can use the Expand and Collapse buttons on the left side of the preview pane to expand and collapse the preview screen.

Table 6-18 **Buttons on the left side of the preview pane**

Button	Description
◀	Expand the preview screen.

Table 6-18 Buttons on the left side of the preview pane (continued)

Button	Description
	Collapse the preview screen.

Use the buttons on the right of the screen to adjust the preview options and to rearrange, rotate, insert, or remove pages.

Table 6-19 Buttons on the right side of the preview pane

Button	Description
	Use these buttons to toggle between single-page view and thumbnail view. More options are available in thumbnail view than in single-page view.
	Use these buttons to zoom in or out on the selected page. NOTE: Select only one page at a time to use these buttons.
	Use this button to rotate the page 180 degrees. NOTE: This button is available only in the thumbnail view.
	Use this button to delete the selected pages. NOTE: This button is available only in the thumbnail view.
	Use these buttons to rearrange the pages within the document. Select one or more pages and move them to the left or right. NOTE: These buttons are available only in the thumbnail view.
	Use this button to add a page to the document. The printer prompts to scan additional pages.

Table 6-19 Buttons on the right side of the preview pane (continued)

Button	Description
	Use this button to clear the changes made in the preview and start over.
	Touch this button to collapse the preview screen and return to the Copy screen.

7. When the document is ready, select Send to save the file to the network folder.

Scan to SharePoint

Scan a document directly to a SharePoint site.

Introduction

If you have a workflow-equipped printer, you can scan a document and send it to a SharePoint site. This feature eliminates the need to scan the documents to a network folder, USB flash drive, or email message, and then manually upload the files to the SharePoint site.

Scan to SharePoint supports all scanning options, including the ability to scan documents as images or use the OCR features to create text files or searchable PDFs.

NOTE: Before you can scan to SharePoint, your printer administrator or IT department must use the HP Embedded Web Server to enable the feature and set it up.

Scan to SharePoint

Use the following steps to scan a document directly to a SharePoint site.

1. Place the document face-down on the scanner glass, or place it face-up in the document feeder and adjust the paper guides to fit the size of the document.
2. From the Home screen on the printer control panel, navigate to the Scan application, select the Scan icon, and then select Scan to SharePoint®.

   NOTE: It might be necessary to sign in to the printer to use this feature.

3. Under Quick Sets, touch Select, select a Quick Set, and then select Load.
4. Select the File Name: text field to open a keyboard. Type the name for the file, and then select the enter button .
5. To configure settings, such as File Type and Resolution, Sides, and Content Orientation, select Options in the lower left corner, and then select the settings from the Options menus. Select Done if prompted.

6. Optional Preview: Touch the right pane of the screen to preview the document. You can use the Expand and Collapse buttons on the left side of the preview pane to expand and collapse the preview screen.

Table 6-20 Buttons on the left side of the preview pane

Button	Description
	Expand the preview screen.
	Collapse the preview screen.

Use the buttons on the right of the screen to adjust the preview options and to rearrange, rotate, insert, or remove pages.

Table 6-21 Buttons on the right side of the preview pane

Button	Description
	Use these buttons to toggle between single-page view and thumbnail view. More options are available in thumbnail view than in single-page view.
	Use these buttons to zoom in or out on the selected page. NOTE: Select only one page at a time to use these buttons.
	Use this button to rotate the page 180 degrees. NOTE: This button is available only in the thumbnail view.
	Use this button to delete the selected pages. NOTE: This button is available only in the thumbnail view.

Table 6-21 Buttons on the right side of the preview pane (continued)

Button	Description
	Use these buttons to rearrange the pages within the document. Select one or more pages and move them to the left or right. NOTE: These buttons are available only in the thumbnail view.
	Use this button to add a page to the document. The printer prompts to scan additional pages.
	Use this button to clear the changes made in the preview and start over.
	Touch this button to collapse the preview screen and return to the Copy screen.

7. When the document is ready, select Send to save it to the SharePoint location.

Scan to USB drive

Scan a document directly to a USB drive.

Introduction

The printer can scan a file and save it to a USB flash drive.

Scan to USB drive

Use the following steps to scan a document directly to a USB drive.

NOTE: You might be required to sign in to the printer to use this feature.

1. Place the document face-down on the scanner glass, or place it face-up in the document feeder and adjust the paper guides to fit the size of the document.
2. Insert the USB drive into the USB port near the printer control panel.
3. From the Home screen on the printer control panel, navigate to the Scan application, select the Scan icon, and then select Scan to USB Drive.
4. Select the USB drive under Destination, and then select the save location (either the root of the USB drive or an existing folder).
5. Touch the File Name text field to open a touchscreen keyboard, type the name for the file, and then select the Enter button .

6. To configure settings, such as File Type and Resolution, Original Sides, and Content Orientation, select Options in the lower left corner, and then select the settings from the Options menus. Select Done if prompted.

7. Optional Preview: Touch the right pane of the screen to preview the document. You can use the Expand and Collapse buttons on the left side of the preview pane to expand and collapse the preview screen.

Table 6-22 Buttons on the left side of the preview pane

Button	Description
	Expand the preview screen.
	Collapse the preview screen.

Use the buttons on the right of the screen to adjust the preview options and to rearrange, rotate, insert, or remove pages.

Table 6-23 Buttons on the right side of the preview pane

Button	Description
	Use these buttons to toggle between single-page view and thumbnail view. More options are available in thumbnail view than in single-page view.
	Use these buttons to zoom in or out on the selected page. NOTE: Select only one page at a time to use these buttons.
	Use this button to rotate the page 180 degrees. NOTE: This button is available only in the thumbnail view.
	Use this button to delete the selected pages. NOTE: This button is available only in the thumbnail view.

Table 6-23 Buttons on the right side of the preview pane (continued)

Button	Description
	Use these buttons to rearrange the pages within the document. Select one or more pages and move them to the left or right. NOTE: These buttons are available only in the thumbnail view.
	Use this button to add a page to the document. The printer prompts to scan additional pages.
	Use this button to clear the changes made in the preview and start over.
	Touch this button to collapse the preview screen and return to the Copy screen.

8. When the document is ready, select Save to save the file to the USB drive.

Use HP JetAdvantage business solutions

HP JetAdvantage solutions are workflow and printing solutions that are easy to use, and both network- and cloud-based. HP JetAdvantage solutions are designed to help businesses of all types, including healthcare, financial services, manufacturing, and public sector, manage a fleet of printers and scanners.

HP JetAdvantage Solutions include:

- HP JetAdvantage Security solutions
- HP JetAdvantage Management solutions
- HP JetAdvantage Workflow solutions
- HP JetAdvantage Mobile Printing solutions

For more information about HP JetAdvantage business workflow and printing solutions, go to www.hp.com/go/PrintSolutions.

Additional scan tasks

Locate information on the Web for performing common scan tasks.

Go to www.hp.com/support/ljM634MFP, www.hp.com/support/ljM635MFP, or www.hp.com/support/ljM636MFP.

Instructions are available for performing specific scan tasks, such as the following:

- Copy or scan pages from books or other bound documents
- Send a scanned document to a folder in the printer memory
- Copy or scan both sides of an identification card
- Copy or scan a document into a booklet format

7 Fax

Configure the fax features, and send and receive faxes using the printer.

The following information is correct at the time of publication. For current information, see www.hp.com/support/ljM634MFP, www.hp.com/support/ljM635MFP, or www.hp.com/support/ljM636MFP.

For more information:

HP's all-inclusive help for the printer includes the following information:

- Install and configure
- Learn and use
- Solve problems
- Download software and firmware updates
- Join support forums
- Find warranty and regulatory information

Set up fax

Set up the fax features for the printer.

Introduction

This information applies to fax and Flow models, or to other printers when an optional analog fax accessory has been installed. Before continuing, connect the printer to a phone line (for analog fax) or to an Internet or network fax service.

Set up fax by using the printer control panel

Configure the fax features using the control panel.

1. From the Home screen on the printer control panel, navigate to the Settings application, and then select the Settings icon.
2. Open the following menus:
   a. Fax
   b. Internal Fax Modem Setup

   NOTE: If the Internal Fax Modem Setup menu does not appear in the menu listing, LAN or Internet fax might be enabled. When LAN or Internet fax is enabled, the analog fax accessory is disabled and the Internal Fax Modem Setup menu does not display. Only one fax feature, either LAN fax, analog fax, or Internet fax, can be enabled at a time. To use analog fax when LAN fax is enabled, use the HP Embedded Web Server to disable LAN fax.
3. Select the location from the list on the right side of the screen, and then select Next.

4. Touch the Company Name text field, and use the keypad to type the company name.
5. Touch the Fax Number text field, and use the keypad to type the sending fax number. Select Next.
6. Verify that the date and time settings are correct. Make changes as necessary, and then select Next.
7. If a dialing prefix is required for sending faxes, touch the Dialing Prefix text field, and use the keypad to enter the number.
8. Review all the information on the left pane, and then select Finish to complete the fax setup.

Change fax configurations

Change or update fax settings.

NOTE: The settings configured using the control panel override any settings made in the HP Embedded Web Server.

Fax dialing settings

Use the following steps to change the fax dialing settings.

1. From the Home screen on the printer control panel, navigate to the Settings application, and then select the Settings icon.
2. Open the following menus:
   a. Fax
   b. Fax Send Settings
   c. Fax Dialing Settings
3. Configure any of the following settings, and then select Done.

Table 7-1 Fax dialing settings

Menu item	Description
Redial on Error	The Redial on Error feature sets the number of times a fax number will be redialed when an error occurs during a fax transmission.
Redial on No Answer	The Redial on No Answer setting selects the number of times the fax accessory redials if the number dialed does not answer. The number of retries is either 0 to 1 (used in the U.S.) or 0 to 2, depending on the location setting. The interval between retries is set by the Redial Interval setting.
Redial on Busy	The Redial on Busy setting selects the number of times (0 through 9) the fax accessory redials a number when the number is busy. The interval between retries is set by the Redial Interval setting.
Redial Interval	The Redial Interval setting selects the number of minutes between retries if the number dialed is busy or not answering, or if an error occurs. NOTE: You might observe a redial message on the control panel when both the Redial on Busy and Redial on No Answer settings are set to off. This occurs when the fax accessory dials a number, establishes a connection, and then loses the connection. As a result of this error condition, the fax accessory performs three automatic redial attempts regardless of the redial settings. During this redial operation, a message displays on the control panel to indicate that a redial is in progress.

Table 7-1 Fax dialing settings (continued)

Menu item	Description
Fax Send Speed	The Fax Send Speed setting sets the modem bit rate (measured in bits per second) of the Analog Fax modem while sending a fax. • Fast (v.34 - 33.6k) • Medium (v.17 - 14.4k) • Slow (v.29 - 9.6k)
Line Monitor Volume	Use the Line Monitor Volume setting to control the printer's dialing volume level when sending faxes.
Dialing Mode	The Dialing Mode setting sets the type of dialing that is used: either tone (touch-tone phones) or pulse (rotary-dial phones).
Dialing Prefix	The Dialing Prefix setting allows you to enter a prefix number (such as a "9" to access an outside line) when dialing. This prefix number is automatically added to all phone numbers when dialed.
Detect Dial Tone	The Detect Dial Tone setting determines whether the fax checks for a dial tone before sending a fax.

General fax send settings

Use the following steps to change the fax send settings.

1. From the Home screen on the printer control panel, navigate to the Settings application, and then select the Settings icon.
2. Open the following menus:
   a. Fax
   b. Fax Send Settings
   c. General Fax Send Settings
3. Configure any of the following settings, and then select Done.

Table 7-2 Fax send settings

Menu item	Description
Fax Number Confirmation	When the Fax Number Confirmation feature is enabled, the fax number must be entered twice to ensure that it was entered correctly. The feature is disabled by default.
PC Fax Send	Use the PC Fax Send feature to send faxes from a PC. This feature is enabled by default.

Table 7-2 Fax send settings (continued)

Menu item	Description
Error Correction Mode	Normally, the fax accessory monitors the signals on the telephone line while it is sending or receiving a fax. If the fax accessory detects an error during the transmission and the Error Correction Mode setting is on, the fax accessory can request that the error portion of the fax be sent again. The Error Correction Mode feature is enabled by default. You should turn it off only if you are having trouble sending or receiving a fax and if you are willing to accept the errors in the transmission and a probable quality reduction in the image. Turning off the setting might be useful when you are trying to send a fax overseas or receive one from overseas, or if you are using a satellite telephone connection. NOTE: Some VoIP providers might suggest turning off the Error Correction Mode setting. However, this is not usually necessary.
Fax Header	Use the Fax Header feature to control whether the header is appended to the top, and content is shifted down, or if the header is overlaid on top of the previous header.

Fax receive settings

Use the following steps to change the fax receive settings.

1. From the Home screen on the printer control panel, navigate to the Settings application, and then select the Settings icon.
2. Open the following menus:
   a. Fax
   b. Fax Receive Settings
   c. Fax Receive Setup
3. Configure any of the following settings, and then select Done.

Table 7-3 Fax receive settings

Menu item	Description
Receive Mode	The Receive Mode setting determines how the fax accessory receives fax jobs. Select one of the following options: • Automatic • TAM • Fax/Tel • Manual
Rings to Answer	The Rings to Answer setting determines the number of times the phone rings before the call is answered by the fax accessory. NOTE: The default range for the available options for the Rings to Answer setting is location-specific. The range of possible Rings to Answer options is limited by location. If the fax accessory is not answering, and the Rings to Answer setting is **1**, try increasing it to **2**.
Ring Volume	The Ring Volume setting allows you to adjust the ringer volume.

Table 7-3 Fax receive settings (continued)

Menu item	Description
Fax Receive Speed	Touch the Fax Receive Speed drop-down menu and select one of the following options: • Fast (v.34 - 33.6k) • Medium (v.17 - 14.4k) • Slow (v.29 - 9.6k)
Extension Phone	This setting allows you use a separate telephone in conjunction with the fax functions.
Allow Reprinting	This setting allows you to reprint received faxes.
Receive to PC	This setting allows you to receive faxes directly to your computer.
Fax Polling	This setting allows you to enable or disable the fax polling function.
Fax/Tel Ring Time	This setting determines the number of times the phone rings before the fax/tel mode initiates.

Send a fax

Use the following steps to send a fax from the printer.

1. Place the document face-down on the scanner glass, or place it face-up in the document feeder and adjust the paper guides to fit the size of the document.
2. From the Home screen on the printer control panel, navigate to the Fax application, and then select the Fax icon. You might be prompted to type a user name and password.
3. Specify the recipients using one of these methods:
   - Use the keypad to enter the recipient or recipients.

     Touch the Fax Recipients text field, and then use the keypad to enter the fax number. To send to multiple fax numbers, separate the numbers with a semicolon, or select the Enter button on the touchscreen keyboard after typing each number.
   - Use a contact list as follows:
     a. Select the Contacts button that is next to the Fax Recipients field to open the Contacts screen.
     b. Select the appropriate contact list.
     c. Select a name or names from the list of contacts to add to the recipients list, and then select Add.
4. To load a Quick Set, select Load, select the Quick Set, and then select Load under the Quick Sets list.

NOTE: **Quick Sets** are predefined settings for various types of output, such as Text, Photograph, and High Quality. You can select a Quick Set to view the description.

5. To configure settings, such as Resolution, Sides, and Content Orientation, select Options in the lower left corner, and then select the settings from the Options menus. Select Done if prompted.

6. Optional Preview: Touch the right pane of the screen to preview the document. You can use the Expand and Collapse buttons on the left side of the preview pane to expand and collapse the preview screen.

Table 7-4 Buttons on the left side of the preview pane

Button	Description
	Expand the preview screen.
	Collapse the preview screen.

Use the buttons on the right of the screen to adjust the preview options and to rearrange, rotate, insert, or remove pages.

Table 7-5 Buttons on the right side of the preview pane

Button	Description
	Use these buttons to toggle between single-page view and thumbnail view. More options are available in thumbnail view than in single-page view.
	Use these buttons to zoom in or out on the selected page. NOTE: Select only one page at a time to use these buttons.
	Use this button to rotate the page 180 degrees. NOTE: This button is available only in the thumbnail view.
	Use this button to delete the selected pages. NOTE: This button is available only in the thumbnail view.

Table 7-5 Buttons on the right side of the preview pane (continued)

Button	Description
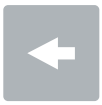	Use these buttons to rearrange the pages within the document. Select one or more pages and move them to the left or right. NOTE: These buttons are available only in the thumbnail view.
	Use this button to add a page to the document. The printer prompts to scan additional pages.
	Use this button to clear the changes made in the preview and start over.
	Touch this button to collapse the preview screen and return to the Copy screen.

7. When the document is ready, select Send to send the fax.

Create a fax printing schedule

Faxes print automatically upon receipt, but they can also be stored and printed on a schedule that you determine. After you create the schedule, you can enable or disable the schedule as needed.

1. From the Home screen on the printer control panel, navigate to the Settings application, and then select the Settings icon.
2. Open the following menus:
   a. Fax
   b. Fax Receive Settings
   c. Fax Printing Schedule
3. Under Incoming Fax Options, select Use Schedule.
4. Select New Event.
5. Select an option under Event Type.
   - Begin Printing
   - Begin Storing
6. Choose a time and the day. You can select multiple days.
7. Select Save. To add another event, repeat steps 4 – 6.
8. Select Done to enable the fax printing schedule.

Block incoming faxes

Use the fax block list setting to create a list of blocked phone numbers. When a fax is received from a blocked phone number, the fax is not printed and is immediately deleted from memory.

Create a list of blocked fax numbers

Use the following steps to create the list of fax numbers to block.

1. From the Home screen on the printer control panel, navigate to the Settings application, and then select the Settings icon.
2. Open the following menus:
   a. Fax
   b. Fax Receive Settings
   c. Blocked Fax Numbers
3. Use one of the following options to add a number to the list:
   - Select Add Last Sender.
   - Select the New Fax Number field, type the number on the keypad that appears, and then select the Enter button . To add additional numbers, type the number and select the Enter button .
4. Select Done.

Delete numbers from the list of blocked fax numbers

Use the following steps to remove numbers from the list of blocked fax numbers.

1. From the Home screen on the printer control panel, navigate to the Settings application, and then select the Settings icon.
2. Open the following menus:
   a. Fax
   b. Fax Receive Settings
   c. Blocked Fax Numbers
3. Select one or more existing fax numbers in the list, or select Select All if you want to remove all the numbers.
4. Select the Trash button , and then select Delete on the confirmation prompt.

Additional fax tasks

Locate information on the Web for performing common fax tasks.

Go to www.hp.com/support/ljM634MFP, www.hp.com/support/ljM635MFP, or www.hp.com/support/ljM636MFP.

Instructions are available for fax tasks, such as the following:

- Create and manage fax speed dial lists
- Configure fax billing codes
- Use a fax printing schedule
- Block incoming faxes
- Fax archiving and forwarding

8 Manage the printer

Utilize management tools, configure security and energy-conservation settings, and manage firmware updates for the printer.

The following information is correct at the time of publication. For current information, see www.hp.com/support/ljM634MFP, www.hp.com/support/ljM635MFP, or www.hp.com/support/ljM636MFP.

For more information:

HP's all-inclusive help for the printer includes the following information:

- Install and configure
- Learn and use
- Solve problems
- Download software and firmware updates
- Join support forums
- Find warranty and regulatory information

Advanced configuration with the HP Embedded Web Server (EWS)

Use the HP Embedded Web Server to manage advanced printing functions.

Introduction

Use the HP Embedded Web Server to manage printing functions from a computer instead of the printer control panel.

- View printer status information
- Determine the remaining life for all supplies and order new ones
- View and change tray configurations
- View and change the printer control-panel menu configuration
- View and print internal pages
- Receive notification of printer and supplies events
- View and change network configuration

The HP Embedded Web Server works when the printer is connected to an IP-based network. The HP Embedded Web Server does not support IPX-based printer connections. Internet access is not needed to open and use the HP Embedded Web Server.

When the printer is connected to the network, the HP Embedded Web Server is automatically available.

NOTE: The HP Embedded Web Server is not accessible beyond the network firewall.

How to access the HP Embedded Web Server (EWS)

Use the following steps to open the Embedded Web Server.

1. From the Home screen on the printer control panel, touch the Information icon , and then touch the Ethernet icon to display the IP address or host name.
2. Open a web browser, and in the address line, type the IP address or host name exactly as it displays on the printer control panel. Press the `Enter` key on the computer keyboard. The EWS web page opens.

NOTE: If the web browser displays a message indicating that accessing the website might not be safe, select the option to continue to the website. Accessing this website will not harm the computer.

To use the HP Embedded Web Server, the browser must meet the following requirements:

Windows® 7

- Internet Explorer (version 8.x or greater)
- Google Chrome (version 34.x or greater)
- Firefox (version 20.x or greater)

Windows® 8 or greater

- Internet Explorer (version 9.x or greater)
- Google Chrome (version 34.x or greater)
- Firefox (version 20.x or greater)

Windows 10 or greater

- Microsoft Edge (version 93 or greater)
- Internet Explorer (version 9.x or greater)
- Google Chrome (version 34.x or greater)
- Firefox (version 20.x or greater)

macOS

- Safari (version 5.x or greater)
- Google Chrome (version 34.x or greater)

Linux

- Google Chrome (version 34.x or greater)
- Firefox (version 20.x or greater)

HP Embedded Web Server features

Learn about the HP Embedded Web Server (EWS) features available on each tab.

Figure 8-1 EWS Tabs

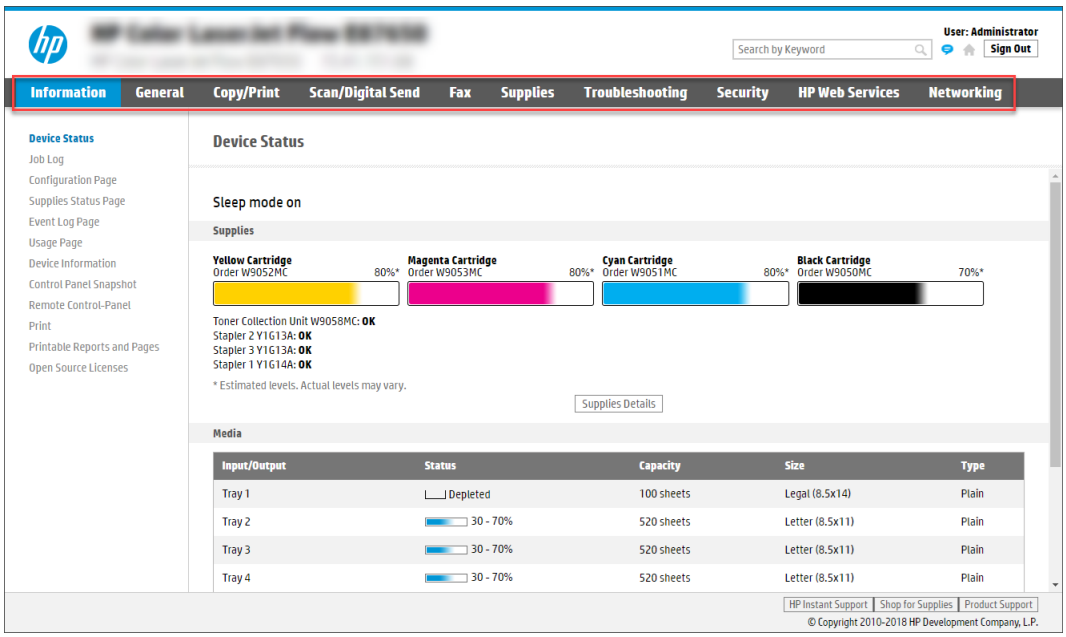

NOTE: **Copy/Print**, **Scan/Digital Send**, and **Fax** tabs only appear for multi-function printers (MFPs). A **Print** tab appears for single-function printers (SFPs).

Information tab

Refer to the table for settings in the **Information** tab.

Table 8-1 HP Embedded Web Server Information tab

Menu	Description
Device Status	Shows the printer status and shows the estimated life remaining of HP supplies. The page also shows the type and size of paper set for each tray. To change the default settings, click the **Change Settings** link.
Job Log	Provides a list of the jobs that have been processed.
Configuration Page	Shows the information found on the configuration page.
Supplies Status Page	Shows the status of the supplies for the printer.
Event Log Page	Shows a list of all printer events and errors. Use the **HP Instant Support** link (in the **Other Links** area on all HP Embedded Web Server pages) to connect to a set of dynamic web pages that help solve problems. These pages also show additional services available for the printer.
Usage Page	Shows a summary of the number of pages the printer has printed, grouped by size, type, and paper print path.
Device Information	Shows the printer network name, address, and model information. To customize these entries, click the **Device Information** menu on the **General** tab.

Table 8-1 HP Embedded Web Server Information tab (continued)

Menu	Description
Control Panel Snapshot	Shows an image of the current screen on the control panel display.
Remote Control-Panel	Provides a way to troubleshoot or manage the printer from a browser window on a desktop or laptop.
Print	Allows the user to send a print-ready file to the printer to be printed.
Printable Reports and Pages	Lists the internal reports and pages for the printer. Select one or more items to print.
Open Source Licenses	Shows a summary of the licenses for open source software programs that can be used with the printer.

General tab

Refer to the table for settings in the **General** tab.

Table 8-2 HP Embedded Web Server General tab

Menu	Description
Control Panel Customization	Reorder, show, or hide features on the control-panel display. Change the default display language and keyboard layouts.
Quick Sets	Configure jobs that are available in the **Quick Sets** area of the Home screen on the printer control panel.
Alerts	Set up email alerts for various printer and supplies events.
Control Panel Settings App	Shows the Settings app options that are available on the printer control panel.
General Settings	Configure how the printer recovers from jams and other general printer settings.
AutoSend	Configure the printer to send automated emails regarding printer configuration and supplies to specific email addresses.
Edit Other Links	Add or customize a link to another website. This link displays in the footer area on all HP Embedded Web Server pages.
Ordering Information	Enter information about ordering replacement toner cartridges. This information displays on the supplies status page.
Device Information	Name the printer and assign an asset number to it. Enter the name of the primary contact who will receive information about the printer.
Language	Set the language in which to display the HP Embedded Web Server information.
Firmware Upgrade	Download and install printer firmware upgrade files.
Date/Time Settings	Set the date and time or synchronize with a network time server.
Energy Settings	Set or edit a wake time, sleep time, and sleep delay for the printer. Set a different schedule for each day of the week and for holidays. Set which interactions with the printer cause it to wake from sleep mode.
Back up and Restore	Create a backup file that contains printer and user data. If necessary, use this file to restore data to the printer.
Reset Factory Settings	Restore printer settings to the factory defaults.
Solution Installer	Install or remove third-party software packages that extend or modify the functionality of the printer.

Table 8-2 HP Embedded Web Server General tab (continued)

Menu	Description
Job Statistics Settings	Provides connection information about third-party job-statistics services, or enables local serverless device job accounting.
Quota Settings	Provides connection information about third-party job-quota services, or enables local device quota service.

Other Links list

Configure which links display in the footer of the HP Embedded Web Server by using the **Edit Other Links** menu on the **General** tab.

NOTE: The following are the default links.

Table 8-3 HP Embedded Web Server Other Links list

Menu	Description
HP Instant Support	Connect to the HP website to find solutions to printer problems.
Shop for Supplies	Connect to the HP website for information on purchasing original HP supplies, such as cartridges and paper.
Product Support	Connect to the support site for the printer to search for help on various topics.

Copy/Print tab

Refer to the table for settings in the **Copy/Print** tab.

Table 8-4 HP Embedded Web Server Copy/Print tab

Menu	Description
Print from USB Drive Settings	Enable or disable the Print from USB Drive menu on the control panel.
Manage Stored Jobs	Enable or disable the ability to store jobs in the printer memory. Configure job-storage options.
Default Print Options	Configure the default options for print jobs.
Restrict Color (Color printers only)	Permit or restrict color printing and copying. Specify permissions for individual users or for jobs that are sent from specific software programs.
PCL and PostScript Settings	Adjust the PCL and PostScript settings for all print jobs, including copy jobs and received faxes.
Print Quality	Configure the print quality settings, including color adjustment, image registration, and allowed paper types.
Copy Settings	Configure the default options and Quick Sets for copy jobs. NOTE: If job-specific copy setting options are not set from the control panel at the start of a job, the default settings will be used for the job.

Table 8-4 HP Embedded Web Server Copy/Print tab (continued)

Menu	Description
Expert Copy	Enable or disable Expert Copy and set the initial copy view. The Expert Copy feature is available only on some HP MFPs with larger control panels, and is available in FutureSmart 4 firmware 24.7.3 release or later.
Manage Trays	Configure settings for paper trays.
Manage Stapler/Stacker	Configure settings for the stapler/stacker for printers that have this feature.

Scan/Digital Send tab

Refer to the table for settings in the **Scan/Digital Send** tab.

Table 8-5 HP Embedded Web Server Scan/Digital Send tab

Menu	Description
Email Setup	Configure the default email settings for digital sending, including the following: • Settings for the outgoing mail (SMTP) server • Settings for Email Quick Sets jobs • Default message settings, such as the "From" address and the subject line • Settings for digital signatures and encryption • Settings for email notifications • Default scan settings for email jobs • Default file settings for email jobs
Scan to Network Folder	Configure the network folder settings for digital sending, including the following: • Settings for Quick Sets jobs saved in a network folder • Settings for notifications • Default scan settings for jobs saved in a network folder • Default file settings for jobs saved in a network folder
Scan to SharePoint®	Configure the SharePoint settings for digital sending, including the following: • Settings for Quick Sets jobs saved in a document library on the SharePoint site • Default settings for jobs saved in a document library on the SharePoint site
Scan to USB Drive	Configure the USB settings for digital sending, including the following: • Settings for Quick Sets jobs saved on a USB flash drive • Settings for notifications • Default scan settings for jobs saved on a USB flash drive • Default file settings for jobs saved on a USB flash drive

Table 8-5 HP Embedded Web Server Scan/Digital Send tab (continued)

Menu	Description
Contacts	Manage contacts, including the following: • Add email addresses into the printer one at a time. • Import a large list of frequently-used email addresses on to the printer all at once, rather than adding them one at a time. • Export contacts from the printer into a .CSV file on the computer to use as a data backup, or import the records onto another HP printer. • Edit email addresses that have already been saved in the printer.
Preferences	Manage general scanning settings.
Email and Scan to Network Folder Quick Setup Wizards	Configure the printer to send scanned images as email attachments. Configure the printer to save scanned images to network-folder Quick Sets. Quick Sets provide easy access to files saved on the network.
Digital Sending Software Setup	Configure settings related to using optional Digital Sending software.

Fax tab

Refer to the table for settings in the **Fax** tab.

Table 8-6 HP Embedded Web Server Fax tab

Menu	Description
Fax Send Setup	Configure settings for sending faxes, including the following: • Default settings for outgoing faxes • Settings for fax Quick Sets jobs • Settings for notifications • Default setting for sending faxes using the internal fax modem • Settings for using a LAN fax service • Settings for using an Internet fax service
Fax Speed Dials	Manage speed dials, including the following: • Import .CSV files containing email addresses, fax numbers, or user records, so that they can be accessed on this printer. • Export email, fax, or user records from the printer into a file on the computer to use as a data backup, or import the records onto another HP printer.
Fax Receive Setup	Configure default print options for incoming faxes, and set up a fax printing schedule.
Fax Archive and Forwarding	Enable or disable fax archiving and fax forwarding, and configure basic settings for each: • Fax archiving is a method to send a copy of all incoming and outgoing faxes to an email address, a network folder, or an FTP server. • Fax forwarding is a method to forward incoming faxes to a different fax device.
Fax Activity Log	Contains a list of the faxes that have been sent from or received by this printer.

Supplies tab

Refer to the table for settings in the **Supplies** tab.

Table 8-7 **HP Embedded Web Server Supplies tab**

Menu	Description
Manage Supplies	Configure how the printer reacts when supplies reach a Very Low state.

Troubleshooting tab

Refer to the table for settings in the **Troubleshooting** tab.

Table 8-8 **HP Embedded Web Server Troubleshooting tab**

Menu	Description
General Troubleshooting	Use the following options as appropriate: • **Reports and Tests** area: Select and print several types of reports and tests. Some reports can be viewed in the Embedded Web Server by clicking the **View** button. • **Fax Tools** area: Configure settings for fax troubleshooting. (MFP and Digital Sender products with HP analog fax accessory only) • **OXPd Troubleshooting** area: Enable or disable the **Allow a Non-Secure Connection for Web Services** option • **Auto Recovery** area: Enable or disable the **Enable Auto Recovery** option, which allows the printer to auto recover from errors that might require the power to be turned off and on (for example, a 49 error).
Online Help	Link to HP cloud-based online help to assist in troubleshooting printing issues.
Diagnostic Data NOTE: This item is available only if an administrator password is set from the **Security** tab.	Export printer information to a file that can be useful for HP technical support to use for detailed problem analysis.
Calibration/Cleaning (Color LaserJet printers only)	Enable the automatic cleaning feature, create and print the cleaning page, and select an option to calibrate the printer immediately.
Reset Factory Settings	Restore printer settings to factory defaults.
Firmware Upgrade	Download and install printer firmware upgrade files.

Security tab

Refer to the table for settings in the **Security** tab.

Table 8-9 HP Embedded Web Server Security tab

Menu	Description
General Security	Settings for general security, including the following: • Configure an administrator password to restrict access to certain features on the printer. • Set a custom device Service Access Code. • Set PJL password for processing PJL commands. • Set file system access and firmware upgrade security. • Enable or disable the Host USB port on the control panel or the USB connectivity port on the formatter for printing directly from a computer. • View the status of all security settings.
Account Policy	Enable administrator account settings.
Access Control	Configure access to printer functions for specific individuals or groups, and select the method individuals use to sign in to the printer.
Protect Stored Data	Configure and manage the internal storage for the printer. Configure settings for jobs that are stored on the printer internal storage.
Manage Remote Apps	Manage or whitelist remote apps by importing or deleting certificates that allow devices to use this product.
Certificate Management	Install and manage security certificates for access to the printer and the network.
Email Domain Restriction	If email functionality is enabled, administrators can limit the email addresses to which the printer can send messages.
Web Service Security	Allow resources on this printer to be accessed by web pages from different domains. If no sites are added to the list, then all sites are trusted.
Self Test	Verify that the security functions are running according to expected system parameters.

HP Web Services tab

Use the **HP Web Services** tab to configure and enable HP Web Services for this printer. It is necessary to Enable HP Web Services to use the HP ePrint feature.

Table 8-10 HP Embedded Web Server HP Web Services tab

Menu	Description
Web Services Setup	Connect this printer to HP Connected on the web by enabling HP Web Services.
Web Proxy	Configure a proxy server if there are issues enabling HP Web Services or connecting the printer to the Internet.
HP JetAdvantage	Access solutions that extend the capabilities of the printer
Smart Cloud Print	Enable Smart Cloud Print, which allows access to web-based apps that extend the capabilities of the printer.

Networking tab

Use the **Networking** tab to configure and secure network settings for the printer when it is connected to an IP-based network. This tab does not display if the printer is connected to other types of networks.

Table 8-11 HP Embedded Web Server Networking tab > Configuration settings

Menu	Description
Wireless Station	Configure the initial wireless settings. NOTE: The configuration options available depend on the print server model.
Wi-Fi Direct	Configure Wi-Fi Direct settings for printers that include embedded Wi-Fi Direct Print and NFC printing or that have a wireless accessory installed. NOTE: The configuration options available depend on the print server model.
TCP/IP Settings	Configure TCP/IP settings for IPv4 and IPv6 networks. NOTE: The configuration options available depend on the print server model.
Network Settings	Configure IPX/SPX, AppleTalk, DLC/LLC, and SNMP settings, depending on the print server model.
Other Settings	Configure general printing protocols and services supported by the print server. The available options depend on the print server model, but can include firmware update, LPD queues, USB settings, support information, and refresh rate.
AirPrint	Enable, set up, or disable network printing from Apple-supported printers.
Select Language	Change the language displayed by the HP Embedded Web Server. This page displays if the web pages support multiple languages. Optionally, select supported languages through language-preference settings in the browser.
Select Location	Select a country/region for the printer.

Table 8-12 HP Embedded Web Server Networking tab > Google Cloud Print settings

Menu	Description
Setup	Set up Google Cloud Print options.
Web Proxy	Configure proxy settings.

Table 8-13 HP Embedded Web Server Networking tab > Security settings

Menu	Description
Settings	View and restore current security settings to factory-default values. Configure security settings using the Security Configuration Wizard. NOTE: Do not use the Security Configuration Wizard to configure security settings if using network-management applications, such as HP Web Jetadmin.
Authorization	Control configuration management and use of this printer, including limiting host access to this printer through an Access Control List (ACL) (for selected print servers on IPv4 networks only).
Secure Communication	Configure Transport Layer Security (TLS) protocol and encryption options.

Table 8-13 HP Embedded Web Server Networking tab > Security settings (continued)

Menu	Description
Mgmt. Protocols	Configure and manage security protocols for this printer, including the following: • Set the security management level for the HP Embedded Web Server, and control traffic over HTTP and HTTPS. • Configure the SNMP (Simple Network Management Protocol) operation. Enable or disable the SNMP v1/v2c or SNMP v3 agents on the print server. • Control access through protocols that may not be secure, such as printing protocols, print services, discovery protocols, name resolution services, and configuration-management protocols.
802.1X Authentication	Configure 802.1X authentication settings on the Jetdirect print server as required for client authentication on the network, and reset the 802.1X authentication settings to factory-default values. CAUTION: When changing the 802.1X authentication settings; the printer might lose its connection. To reconnect, it might be necessary to reset the print server to a factory-default state and reinstall the printer.
IPsec/Firewall	View or configure a Firewall policy or an IPsec/Firewall policy.
Announcement Agent	Enable or disable the HP Device Announcement Agent, set the configuration server, and configure mutual authentication using certificates.

Table 8-14 HP Embedded Web Server Networking tab > Diagnostics settings

Menu	Description
Network Statistics	Display network statistics that are collected and stored on the HP Jetdirect print server.
Protocol Info	View a list of network-configuration settings on the HP Jetdirect print server for each protocol.
Configuration Page	View the HP Jetdirect configuration page, which contains status and configuration information.

Configure IP network settings

Use the EWS to configure the printer network settings.

Printer sharing disclaimer

Review the following disclaimer.

HP does not support peer-to-peer networking, as the feature is a function of Microsoft operating systems and not of the HP printer drivers. Go to Microsoft at www.microsoft.com.

View or change network settings

Use the HP Embedded Web Server to view or change IP configuration settings.

1. Open the HP Embedded Web Server (EWS):

a. From the Home screen on the printer control panel, touch the Information icon , and then touch the Ethernet icon to display the IP address or host name.

b. Open a web browser, and in the address line, type the IP address or host name exactly as it displays on the printer control panel. Press the `Enter` key on the computer keyboard. The EWS opens.

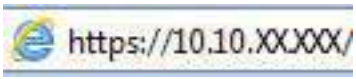

NOTE: If the web browser displays a message indicating that accessing the website might not be safe, select the option to continue to the website. Accessing this website will not harm the computer.

2. Click the **Networking** tab to obtain network information. Change settings as needed.

Rename the printer on a network

To rename the printer on a network so that it can be uniquely identified, use the HP Embedded Web Server.

1. Open the HP Embedded Web Server (EWS):

   a. From the Home screen on the printer control panel, touch the Information icon , and then touch the Ethernet icon to display the IP address or host name.

   b. Open a web browser, and in the address line, type the IP address or host name exactly as it displays on the printer control panel. Press the `Enter` key on the computer keyboard. The EWS opens.

   NOTE: If the web browser displays a message indicating that accessing the website might not be safe, select the option to continue to the website. Accessing this website will not harm the computer.

2. Open the **General** tab.

3. On the Device Information page, the default printer name is in the **Device Name** field. You can change this name to uniquely identify this printer.

NOTE: Completing the other fields on this page is optional.

4. Click the **Apply** button to save the changes.

Manually configure IPv4 TCP/IP parameters from the control panel

Use the control-panel Settings menus to manually set an IPv4 address, subnet mask, and default gateway.

1. From the Home screen on the printer control panel, navigate to the Settings application, and then select the Settings icon.

2. Open the following menus:

a. Networking

b. Ethernet

c. TCP/IP

d. IPV 4 Settings

e. Config Method

3. Select the Manual option, and then touch the Save button.

4. Open the Manual Settings menu.

5. Touch the IP Address, Subnet Mask, or Default Gateway option.

6. Touch the first field to open a keypad. Enter the correct digits for the field, and then touch the OK button.

   Repeat the process for each field, and then touch the Save button.

Manually configure IPv6 TCP/IP parameters from the control panel

Use the control-panel Settings menus to manually set an IPv6 address.

1. From the Home screen on the printer control panel, navigate to the Settings application, and then select the Settings icon.

2. To enable manual configuration, open the following menus:

   a. Networking

   b. Ethernet

   c. TCP/IP

   d. IPV6 Settings

3. Select Enable, and then select On.

4. Select the Enable Manual Settings option, and then touch the Done button.

5. To configure the address, open the Address menu, and then touch the field to open a keypad.

6. Use the keypad to enter the address, and then touch the OK button.

7. Touch Save.

Link speed and duplex settings

Use the following steps to make changes to link speed and duplex settings.

NOTE: This information applies only to Ethernet networks. It does not apply to wireless networks.

The link speed and communication mode of the print server must match the network hub. For most situations, leave the printer in automatic mode. Incorrect changes to the link speed and duplex settings

might prevent the printer from communicating with other network devices. To make changes, use the printer control panel.

NOTE: The printer setting must match the setting for the network device (a network hub, switch, gateway, router, or computer).

NOTE: Making changes to these settings causes the printer to turn off and then on. Make changes only when the printer is idle.

1. From the Home screen on the printer control panel, navigate to the Settings application, and then select the Settings icon.
2. Open the following menus:
   a. Networking
   b. Ethernet
   c. Link Speed
3. Select one of the following options:
   - Auto: The print server automatically configures itself for the highest link speed and communication mode allowed on the network.
   - 10T Half: 10 megabytes per second (Mbps), half-duplex operation
   - 10T Full: 10 Mbps, full-duplex operation
   - 10T Auto: 10 Mbps, automatic-duplex operation
   - 100TX Half: 100 Mbps, half-duplex operation
   - 100TX Full: 100 Mbps, full-duplex operation
   - 100TX Auto: 100 Mbps, automatic-duplex operation
   - 1000T Full: 1000 Mbps, full-duplex operation
4. Touch the Save button. The printer turns off and then on.

Printer security features

Restrict who has access to configuration settings, secure data, and prevent access to valuable hardware components.

Introduction

The printer includes several security features to restrict who has access to configuration settings, to secure data, and to prevent access to valuable hardware components.

Security statements

Review this important security statement.

The printer supports security standards and recommended protocols that help you keep the printer secure, protect critical information on your network, and simplify the way you monitor and maintain the printer.

Assign an administrator password

Assign an administrator password for access to the printer and the HP Embedded Web Server so that unauthorized users cannot change the printer settings.

Use the HP Embedded Web Server (EWS) to set the password

Use the following steps to set a password for the printer.

1. Open the HP Embedded Web Server (EWS):

   a. From the Home screen on the printer control panel, touch the Information icon , and then touch the Ethernet icon to display the IP address or host name.

   b. Open a web browser, and in the address line, type the IP address or host name exactly as it displays on the printer control panel. Press the `Enter` key on the computer keyboard. The EWS opens.

   NOTE: If the web browser displays a message indicating that accessing the website might not be safe, select the option to continue to the website. Accessing this website will not harm the computer.

2. Click the **Security** tab.

3. Open the **General Security** menu.

4. In the area labeled **Set the Local Administrator Password**, enter the name to associate with the password in the **Username** field.

5. Enter the password in the **New Password** field, and then enter it again in the **Verify Password** field.

NOTE: To change an existing password, first enter the existing password in the **Old Password** field.

6. Click the **Apply** button.

IMPORTANT: Make note of the password and store it in a safe place. The administrator password cannot be recovered. If the administrator password is lost or forgotten, contact HP Support for the assistance required to completely reset the printer.

Click here to contact HP Support about resetting the printer password.

Provide user access credentials at the printer control panel

Use the following steps to sign into the control panel.

Some features on the printer control panel can be secured so that unauthorized people cannot use them. When a feature is secured, the printer prompts you to sign in before you can use it. You can also sign in without waiting for a prompt by selecting Sign In from the printer control panel.

Typically, the credentials for signing in to the printer are the same as for signing in to the network. Consult the network administrator for this printer if you have questions about which credentials to use.

1. From the Home screen on the printer control panel, select Sign In.

2. Follow the prompts to enter the credentials.

NOTE: To maintain security for the printer, select Sign Out when you have finished using the printer.

IP Security

IP Security (IPsec) is a set of protocols that control IP-based network traffic to and from the printer. IPsec provides host-to-host authentication, data integrity, and encryption of network communications.

For printers that are connected to the network and have an HP Jetdirect print server, you can configure IPsec by using the **Networking** tab in the HP Embedded Web Server.

Encryption support: HP High Performance Secure Hard Disks

The hard disk provides hardware-based encryption so you can securely store sensitive data without impacting printer performance. This hard disk uses the latest Advanced Encryption Standard (AES) and has versatile time-saving features and robust functionality.

Use the **Security** menu in the HP Embedded Web Server to configure the disk.

Lock the formatter

The formatter has a slot that you can use to attach a security cable.

Locking the formatter prevents someone from removing valuable components from it.

Encryption support: HP High Performance Secure Hard Disks

The hard disk provides hardware-based encryption so you can securely store sensitive data without impacting printer performance. This hard disk uses the latest Advanced Encryption Standard (AES) and has versatile time-saving features and robust functionality.

Use the **Security** menu in the HP Embedded Web Server to configure the disk.

Energy-conservation settings

Learn about the energy-conservation settings that are available for the printer.

Print with EconoMode

This printer has an EconoMode option for printing drafts of documents. Using EconoMode can use less toner. However, using EconoMode can also reduce print quality.

HP does not recommend the full-time use of EconoMode. If EconoMode is used full-time, the toner supply might outlast the mechanical parts in the toner cartridge. If print quality begins to degrade and is no longer acceptable, consider replacing the toner cartridge.

NOTE: If this option is not available in the print driver, set it using the printer control panel.

Configure EconoMode from the printer control panel:

1. From the printer control panel, open the Settings menu.
2. Open the following menus:
   a. Copy/Print or Print

b. Default Print Options

c. Quality Level

3. Select EconoMode to enable the feature.

Set the sleep timer and configure the printer to use 1 watt or less of power

The sleep settings affect how much power the printer uses, the wake/sleep time, how quickly the printer enters sleep mode, and how quickly the printer wakes up from sleep mode.

To configure the printer to use 1 watt or less of power while in sleep mode, enter times for both the Sleep after Inactivity and Auto Off after sleep settings.

NOTE: HP does not recommend using deep sleep settings if you have Security Solutions installed. In some situations, the printer does not wake from deep sleep. For additional information, contact your HP representative.

1. From the Home screen on the printer control panel, navigate to the Settings application, and then select the Settings icon.

2. Open the following menus:

   a. General

   b. Energy Settings

   c. Sleep Settings

3. Select Sleep after Inactivity to specify the number of minutes the printer is inactive before it enters sleep mode. Enter the appropriate time period.

4. Select Auto Off after sleep to put the printer into a deeper power save mode after a period of sleep. Enter the appropriate time period.

   NOTE: By default, the printer will wake from Auto Off in response to any activity other than USB or Wi-Fi. For greater energy settings, you can set it to wake only to the power button by selecting Shut down (wake on power button only).

5. Select Done to save the settings.

Set the sleep schedule

Use the Sleep Schedule feature to configure the printer to automatically wake or go into Sleep mode at specific times on specific days of the week.

1. From the Home screen on the printer control panel, navigate to the Settings application, and then select the Settings icon.

2. Open the following menus:

   a. General

   b. Energy Settings

   c. Sleep Schedule

3. Select the New Event button, and then select the type of event to schedule: Wake Event or Sleep Event.

4. For a wake or sleep event, configure the time and the days of the week for the event. Select Save to save the setting.

HP Web Jetadmin

HP Web Jetadmin is an award-winning, industry-leading tool for efficiently managing a wide variety of networked HP products, including printers, multifunction printers, and digital senders. This single solution allows you to remotely install, monitor, maintain, troubleshoot, and secure your printing and imaging environment – ultimately increasing business productivity by helping you save time, control costs, and protect your investment.

HP Web Jetadmin upgrades are periodically made available to provide support for specific product features. Go to www.hp.com/go/webjetadmin for more information.

Software and firmware updates

HP regularly updates features that are available in the printer firmware. To take advantage of the most current features, update the printer firmware.

Download the most recent firmware update file from the web:

Go to www.hp.com/support/ljM634MFP, www.hp.com/support/ljM635MFP, or www.hp.com/support/ljM636MFP. Click **Software, Drivers and Firmware**.

9 Solve problems

Troubleshoot problems with the printer. Locate additional resources for help and technical support.

The following information is correct at the time of publication. For current information, see www.hp.com/support/ljM634MFP, www.hp.com/support/ljM635MFP, or www.hp.com/support/ljM636MFP.

For more information:

HP's all-inclusive help for the printer includes the following information:

- Install and configure
- Learn and use
- Solve problems
- Download software and firmware updates
- Join support forums
- Find warranty and regulatory information

Customer support

Find support contact options for your HP printer.

Table 9-1 Customer support options

Support option	Location
Get telephone support for your country/region. Have the printer name, serial number, date of purchase, and problem description ready.	Country/region phone numbers are on the flyer that was in the box with the printer or at support.hp.com.
Get 24-hour Internet support, and download software utilities and drivers.	www.hp.com/support/ljM634MFP, www.hp.com/support/ljM635MFP, or www.hp.com/support/ljM636MFP
Order additional HP service or maintenance agreements.	www.hp.com/go/carepack
Register the printer.	www.register.hp.com

Control panel help system

The printer has a built-in Help system that explains how to use each screen. To open the Help system, touch the Help button ? in the upper-right corner of the screen.

For some screens, the Help opens to a global menu where you can search for specific topics. You can browse through the menu structure by touching the buttons in the menu.

Some Help screens include animations that show specific procedures, such as clearing paper jams.

If the printer alerts of an error or warning, touch the Help button ? to open a message that describes the problem. The message also contains instructions to help solve the problem.

Reset factory settings

Resetting the printer settings to the factory-set defaults can help resolve problems.

Introduction

Use one of the following methods to reset the printer settings to the original settings from the factory.

Method one: Reset factory settings from the printer control panel

Use the printer control panel to restore the settings to their original values.

1. From the Home screen on the printer control panel, navigate to the Settings application, and then select the Settings icon.
2. Open the following menus:
   a. General
   b. Reset Factory Settings
3. Select Reset.

   A verification message advises that completing the reset function might result in loss of data.
4. Select Reset to complete the process.

NOTE: The printer restarts automatically after the reset operation completes.

Method two: Reset factory settings from the HP Embedded Web Server (network-connected printers only)

Use the HP EWS to reset the printer settings to the original settings.

1. On the printer control panel, select the Information button , and then select the Network icon to display the IP address or host name.
2. Open the **General** tab.
3. On the left side of the screen, click **Reset Factory Settings**.
4. Click the **Reset** button.

NOTE: The printer restarts automatically after the reset operation completes.

A "Cartridge is low" or "Cartridge is very low" message displays on the printer control panel or EWS

Review the possible solutions to this issue.

Cartridge is low: The printer indicates when a toner cartridge level is low. Actual toner cartridge life remaining may vary. Consider having a replacement available to install when print quality is no longer acceptable. The toner cartridge does not need to be replaced now.

Cartridge is very low: The printer indicates when the toner cartridge level is very low. Actual toner cartridge life remaining may vary. Consider having a replacement available to install when print quality is no longer acceptable. The toner cartridge does not need to be replaced now unless the print quality is no longer acceptable.

HP's Premium Protection Warranty expires near the end of useable cartridge life. Check the Supplies Status Page or the HP Embedded Web Server (EWS) for the status.

Change the "Very Low" settings

You can change the way the printer reacts when supplies reach the Very Low state. You do not have to re-establish these settings when you install a new cartridge.

Change the "Very Low" settings at the control panel

Change the setting at the printer control panel.

1. From the Home screen on the printer control panel, navigate to the Settings application, and then select the Settings icon.
2. Open the following menus:
   a. Manage Supplies
   b. Very Low Behavior
   c. Black Cartridge or Color Cartridges
3. Select one of the following options:
   - Select the Stop option to set the printer to stop printing when the cartridge reaches the **Very Low** threshold.

- Select the Prompt to continue option to set the printer to stop printing when the cartridge reaches the **Very Low** threshold. You can acknowledge the prompt or replace the cartridge to resume printing.
- Select the Continue option to set the printer to alert you that the cartridge is very low, and to continue printing beyond the **Very Low** setting without interaction. This can result in unsatisfactory print quality.

For printers with fax capability

When the printer is set to the Stop or Prompt to continue option, there is some risk that faxes will not print when the printer resumes printing. This can occur if the printer has received more faxes than the memory can hold while the printer is waiting.

The printer can print faxes without interruption when it passes the Very Low threshold if you select the Continue option for the cartridge, but print quality might degrade.

Order supplies

Order supplies and paper for your HP printer.

Table 9-2 **Ordering options**

Ordering option	Ordering information
Order supplies and paper	www.hp.com
Order through service or support providers	Contact an HP-authorized service or support provider.
Order using the HP Embedded Web Server (EWS)	To access, in a supported web browser on your computer, enter the printer IP address or host name in the address/URL field. The EWS contains a link to the HP website, which provides options for purchasing Original HP supplies.

Printer does not pick up paper or misfeeds

Use this information if the printer is not picking up paper from the tray or is picking up multiple sheets of paper at one time.

Introduction

The following solutions can help solve problems if the printer is not picking up paper from the tray or is picking up multiple sheets of paper at one time. Either of these situations can result in paper jams.

The printer does not pick up paper

If the printer does not pick up paper from the tray, try these solutions:

1. Open the printer and remove any jammed sheets of paper. Verify that no torn remnants of paper remain inside the printer.
2. Load the tray with the correct size of paper for the job.
3. Make sure the paper size and type are set correctly on the printer control panel.

4. Make sure the paper guides in the tray are adjusted correctly for the size of paper. Adjust the guides to the appropriate indentation in the tray. The arrow on the tray guide should line up exactly with the marking on the tray.

NOTE: Do not adjust the paper guides tightly against the paper stack. Adjust them to the indentations or markings in the tray.

The following images show examples of the paper-size indentations in the trays for various printers. Most HP printers have markings similar to these.

Figure 9-1 Size markings for Tray 1 or the multipurpose tray

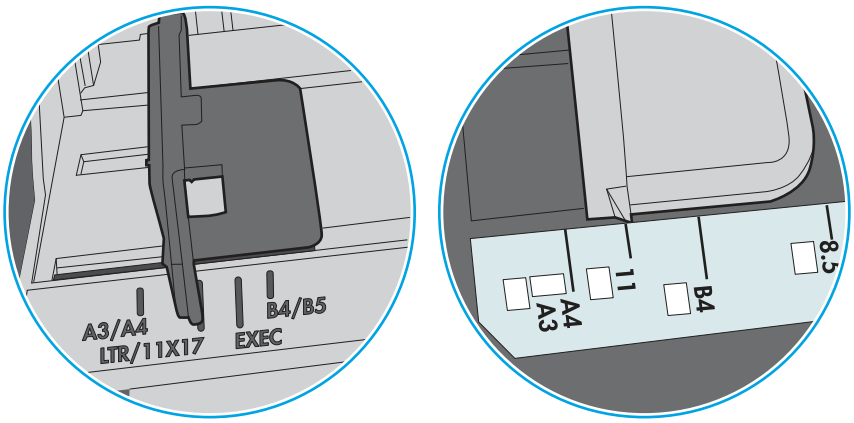

Figure 9-2 Size markings for cassette trays

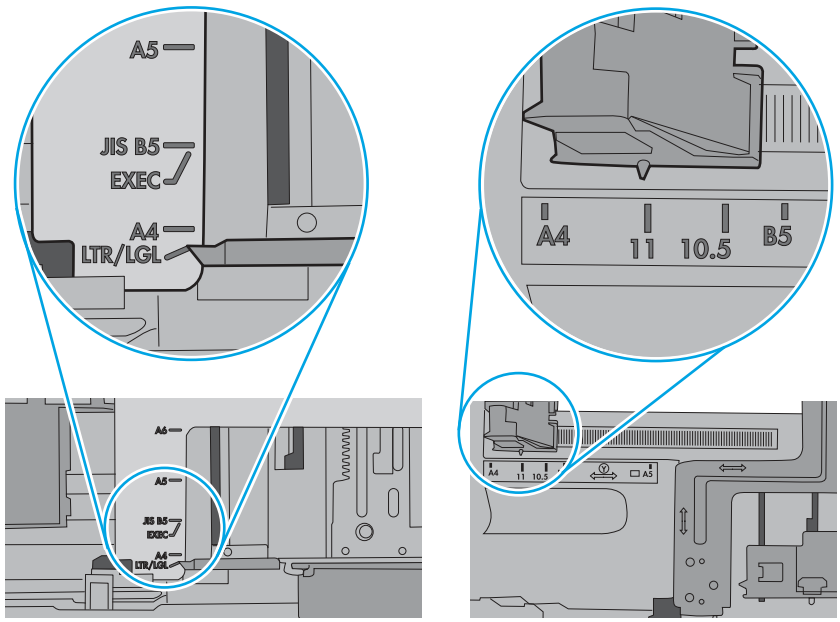

5. Verify that the humidity in the room is within specifications for this printer and that paper is being stored in unopened packages. Most reams of paper are sold in moisture-proof wrapping to keep paper dry.

   In high-humidity environments, paper at the top of the stack in the tray can absorb moisture, and it might have a wavy or uneven appearance. If this happens, remove the top 5 to 10 sheets of paper from the stack.

   In low-humidity environments, excess static electricity can cause sheets of paper to stick together. If this happens, remove the paper from the tray, and flex the stack by holding it at each end and bringing the ends up to form a U shape. Then, rotate the ends down to reverse the U shape. Next, hold each side of the stack of paper and repeat this process. This process releases individual sheets without introducing static electricity. Straighten the paper stack against a table before returning it to the tray.

   Figure 9-3 Technique for flexing the paper stack

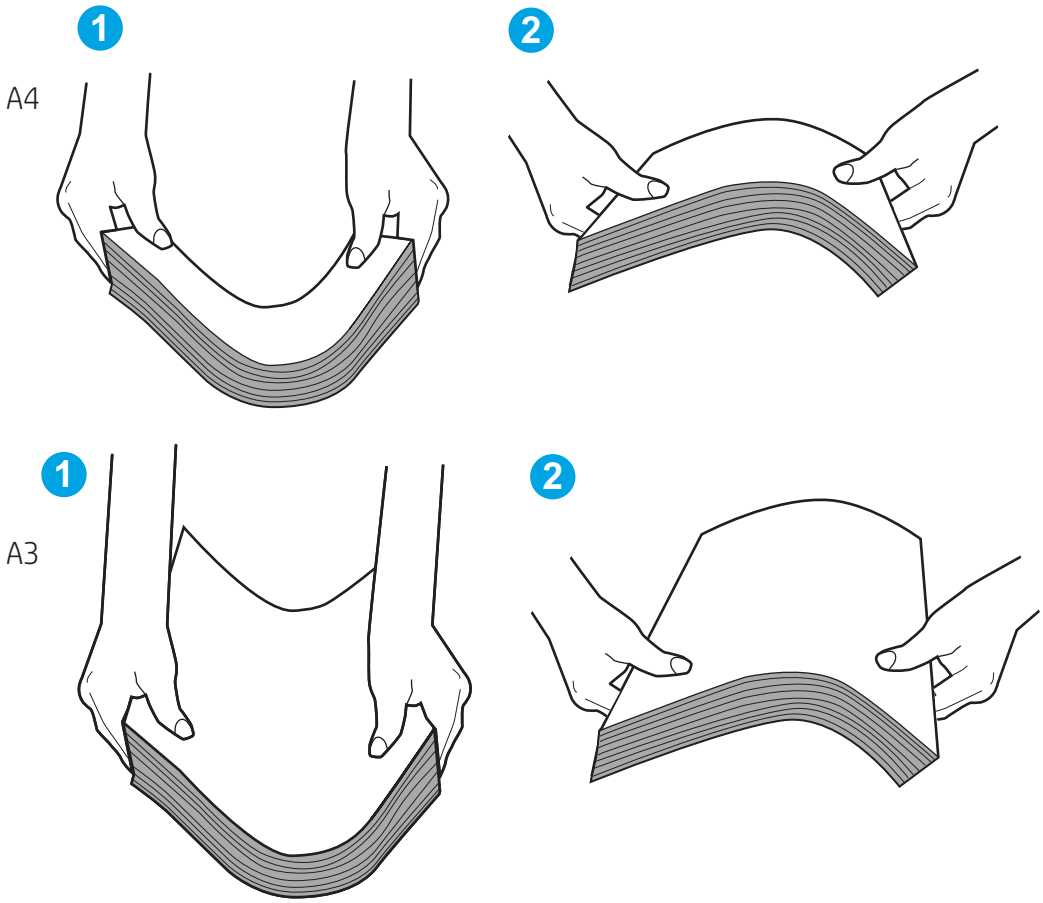

6. Check the printer control panel to see if it is displaying a prompt to feed the paper manually. Load paper, and continue.

7. The rollers above the tray might be contaminated. Clean the rollers with a lint-free cloth dampened with warm water. Use distilled water, if it is available.

⚠ **CAUTION:** Do not spray water directly onto the printer. Instead, spray water on the cloth or dab the cloth in water and wring it out before cleaning the rollers.

   The following image shows examples of the roller location for various printers.

Figure 9-4 **Roller locations for Tray 1 or the multipurpose tray**

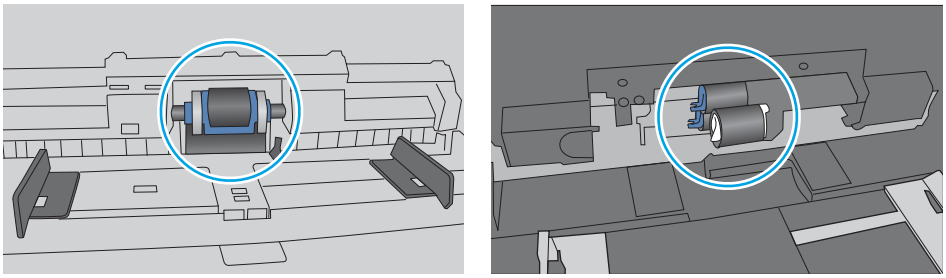

The printer picks up multiple sheets of paper

If the printer picks up multiple sheets of paper from the tray, try these solutions:

1. Remove the stack of paper from the tray and flex it, rotate it 180 degrees, and flip it over. *Do not fan the paper.* Return the stack of paper to the tray.

NOTE: Fanning the paper introduces static electricity. Instead of fanning the paper, flex the stack by holding it at each end and bringing the ends up to form a U shape. Then, rotate the ends down to reverse the U shape. Next, hold each side of the stack of paper and repeat this process. This process releases individual sheets without introducing static electricity. Straighten the paper stack against a table before returning it to the tray.

Figure 9-5 Technique for flexing the paper stack

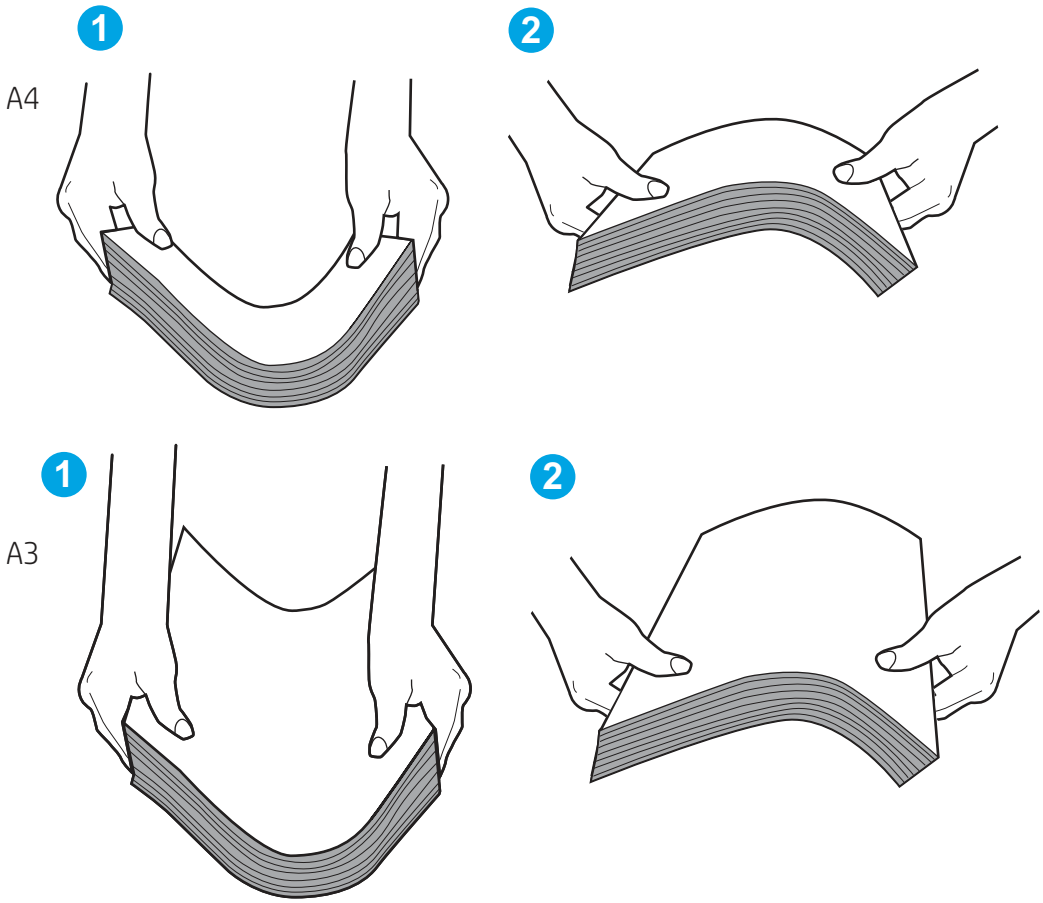

2. Use only paper that meets HP specifications for this printer.

3. Verify that the humidity in the room is within specifications for this printer, and that paper is being stored in unopened packages. Most reams of paper are sold in moisture-proof wrapping to keep paper dry.

   In high-humidity environments, paper at the top of the stack in the tray can absorb moisture, and it might have a wavy or uneven appearance. If this happens, remove the top 5 to 10 sheets of paper from the stack.

   In low-humidity environments, excess static electricity can cause sheets of paper to stick together. If this happens, remove the paper from the tray and flex the stack as described above.

4. Use paper that is not wrinkled, folded, or damaged. If necessary, use paper from a different package.

5. Make sure the tray is not overfilled by checking the stack-height markings inside the tray. If it is overfilled, remove the entire stack of paper from the tray, straighten the stack, and then return some of the paper to the tray.

   The following examples show the stack-height markings in the trays for various printers. Most HP printers have markings similar to these. Also make sure that all sheets of paper are below the tabs near the stack-height marks. These tabs help hold the paper in the correct position as it enters the printer.

Figure 9-6 Stack-height markings

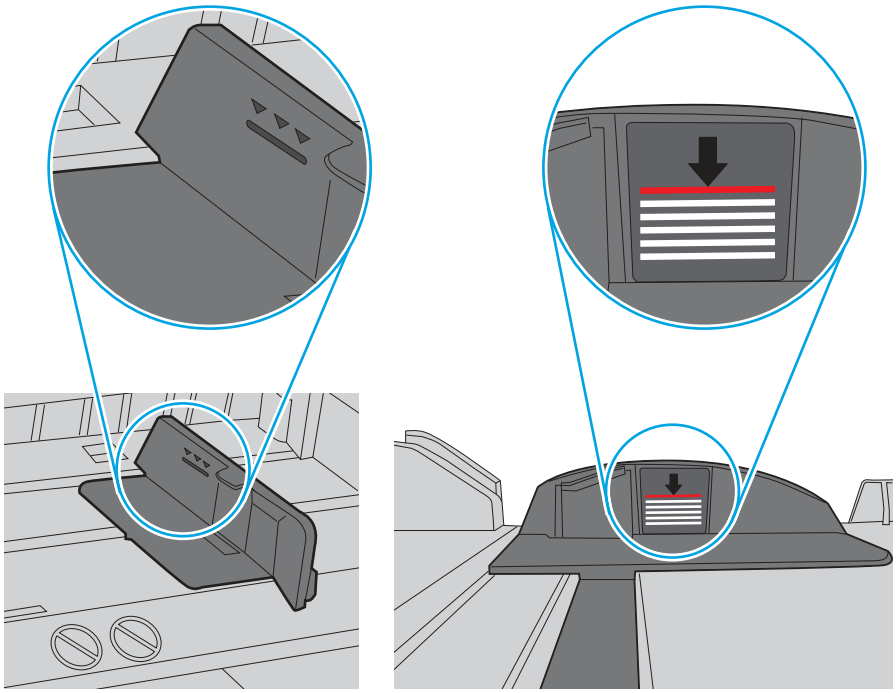

Figure 9-7 Tab for the paper stack

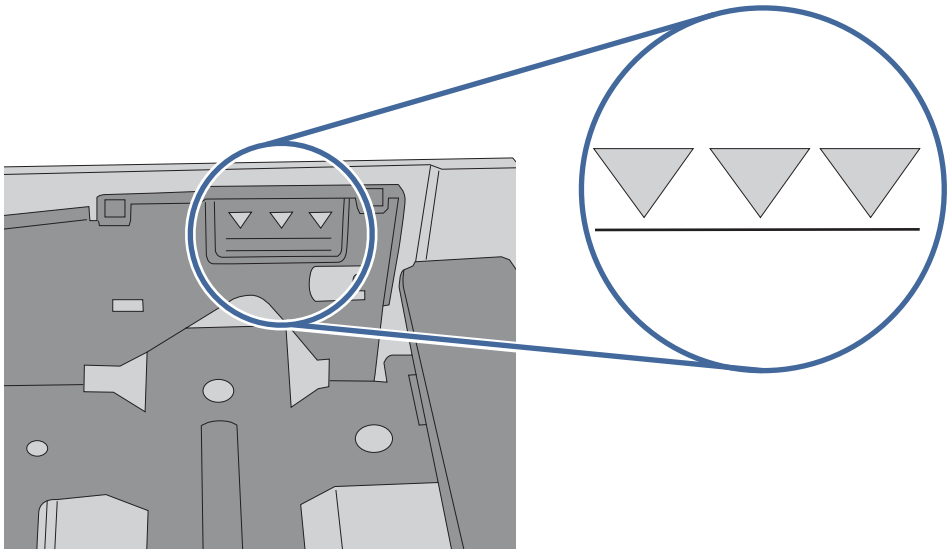

6. Make sure the paper guides in the tray are adjusted correctly for the size of paper. Adjust the guides to the appropriate indentation in the tray. The arrow on the tray guide should line up exactly with the marking on the tray.

NOTE: Do not adjust the paper guides tightly against the paper stack. Adjust them to the indentations or markings in the tray.

The following images show examples of the paper-size indentations in the trays for various printers. Most HP printers have markings similar to these.

Figure 9-8 Size markings for Tray 1 or the multipurpose tray

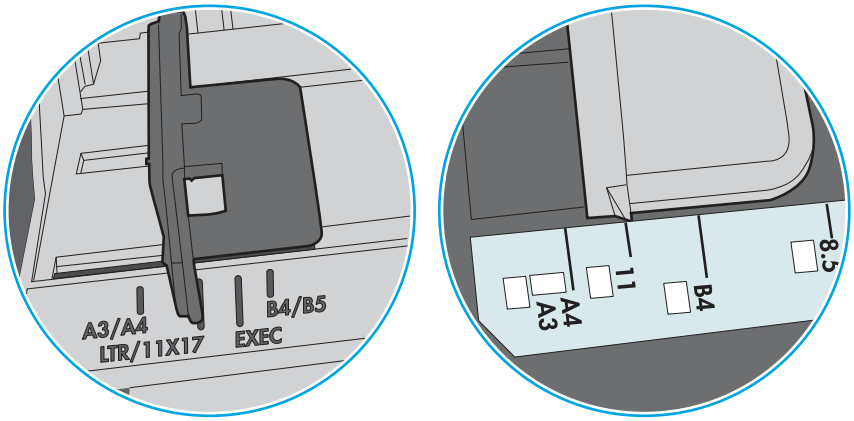

Figure 9-9 Size markings for cassette trays

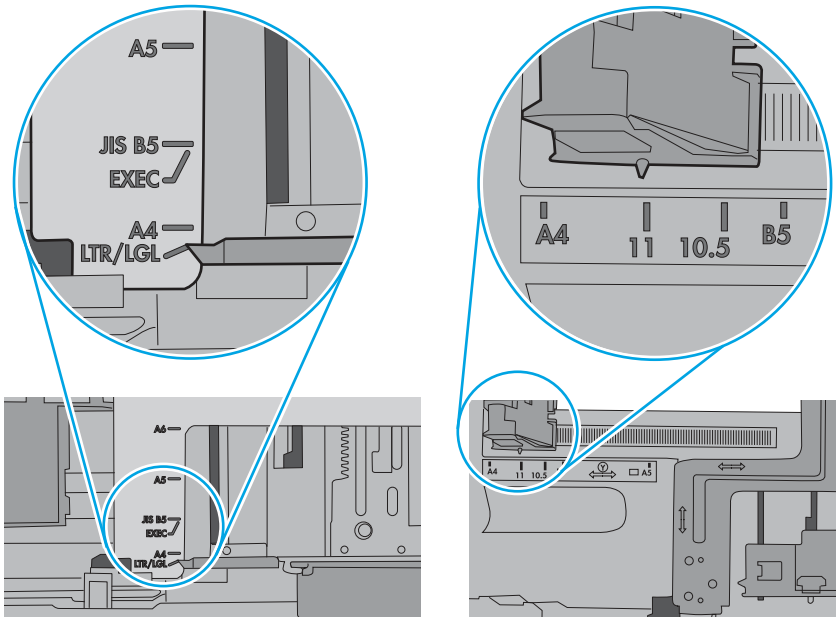

7. Make sure the printing environment is within recommended specifications.

The document feeder jams, skews, or picks up multiple sheets of paper

If the document feeder jams, skews, or picks up multiple sheets of paper, try these solutions.

NOTE: This information applies to MFP printers only.

- The original might have something on it, such as staples or self-adhesive notes, that must be removed.
- Check that all rollers are in place and that the roller-access cover inside the document feeder is closed.
- Make sure that the top document-feeder cover is closed.
- The pages might not be placed correctly. Straighten the pages and adjust the paper guides to center the stack.
- The paper guides must be touching the sides of the paper stack to work correctly. Make sure that the paper stack is straight and the guides are against the paper stack.
- The document feeder input tray or output bin might contain more than the maximum number of pages. Make sure the paper stack fits below the guides in the input tray, and remove pages from the output bin.
- Verify that there are no pieces of paper, staples, paper clips, or other debris in the paper path.
- Clean the document-feeder rollers and the separation pad. Use compressed air or a clean, lint-free cloth moistened with warm water. If misfeeds still occur, replace the rollers.
- From the Home screen on the printer control panel, scroll to and touch the Supplies button. Check the status of the document-feeder kit, and replace it if necessary.

Clear paper jams

Use the following procedures to clear paper jams.

Introduction

The following information includes instructions for clearing paper jams from the printer.

Paper jam locations

Learn about the paper jam locations.

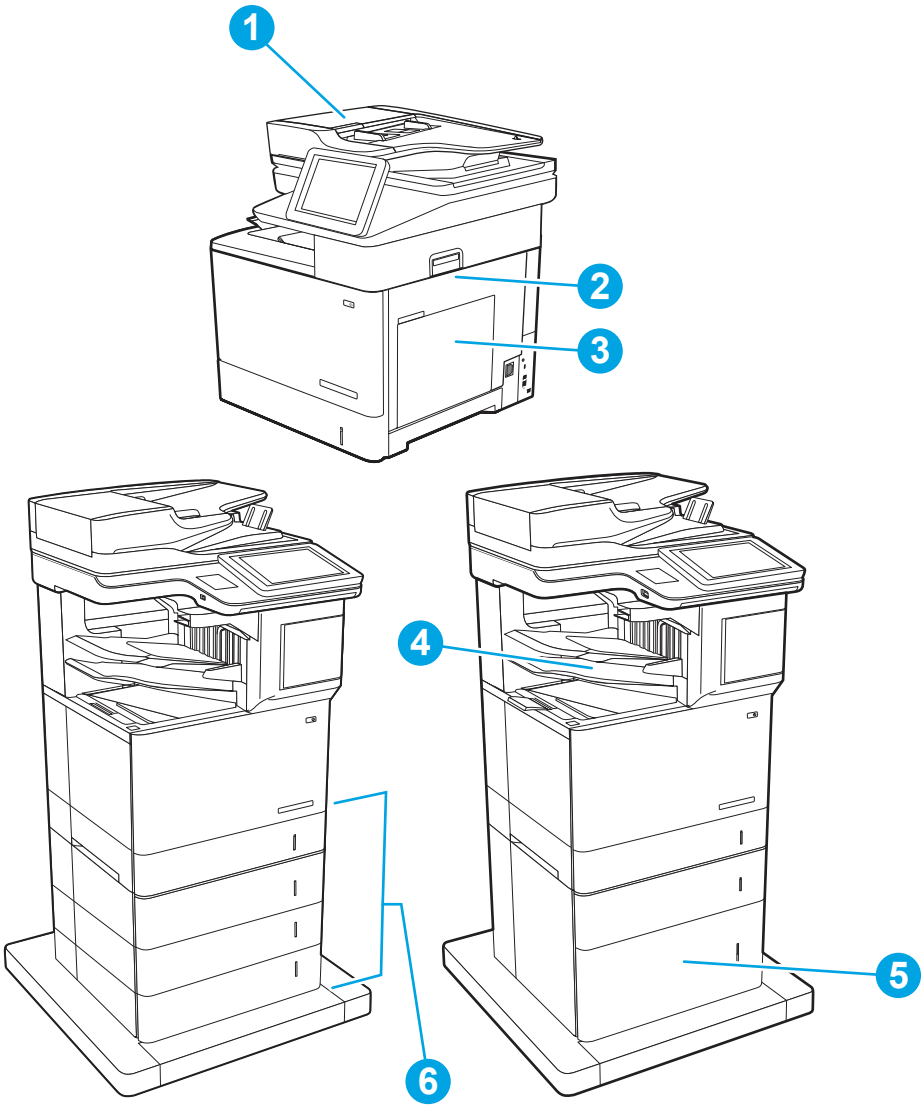

Number	Description
1	Document feeder
2	Duplexer and fuser
3	Tray 1
4	Output bin, HP Stapling Mailbox
5	2,000-sheet HCI feeder
6	Trays 2-5
Not shown	Envelope feeder

Auto-navigation for clearing paper jams

Learn about printer jam clearing auto-navigation.

The auto-navigation feature assists in clearing jams by providing step-by-step instructions on the control panel.

When you complete a step, the printer displays instructions for the next step until you have completed all steps in the procedure.

Experiencing frequent or recurring paper jams?

To reduce the number of paper jams, try these solutions.

1. Use only paper that meets HP specifications for this printer.
2. Use paper that is not wrinkled, folded, or damaged. If necessary, use paper from a different package.
3. Use paper that has not previously been printed or copied on.
4. Make sure the tray is not overfilled. If it is, remove the entire stack of paper from the tray, straighten the stack, and then return some of the paper to the tray.
5. Make sure the paper guides in the tray are adjusted correctly for the size of paper. Adjust the guides so they are touching the paper stack without bending it.
6. Make sure that the tray is fully inserted in the printer.
7. If you are printing on heavy, embossed, or perforated paper, use the manual feed feature and feed sheets one at a time.
8. Open the Trays menu on the printer control panel. Verify that the tray is configured correctly for the paper type and size.
9. Make sure the printing environment is within recommended specifications.

31.13.yz Clear paper jams in the document feeder

Follow these troubleshooting steps in the order presented.

Recommended action for customers

Use the following procedure to check for paper in all possible jam locations related to the document feeder. When a jam occurs, the control panel might display a message and an animation that assists in clearing the jam.

- **31.13.yz Jam in Document Feeder**

1. Lift the document-feeder latch.

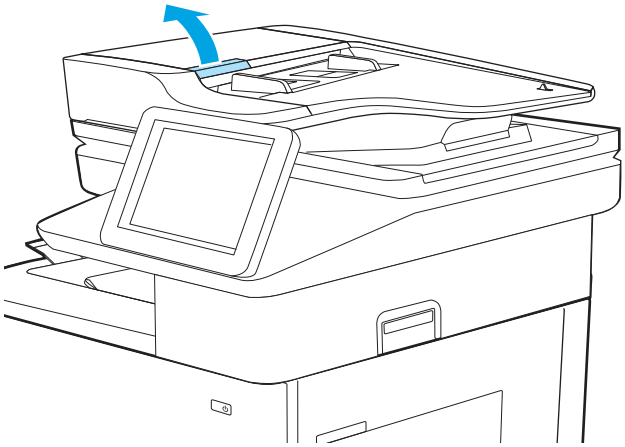

2. Open the document-feeder cover.

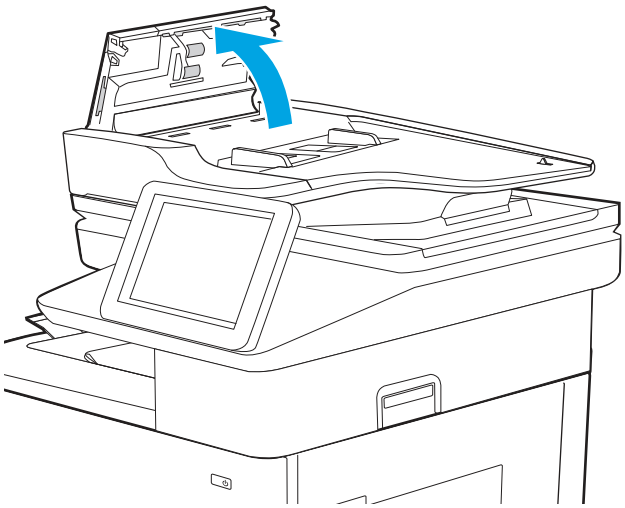

3. Gently remove any jammed paper.

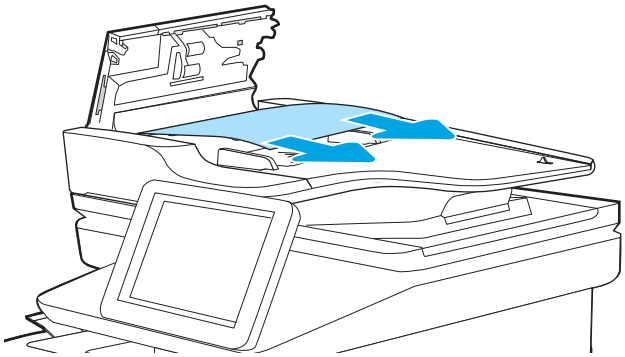

4. . Close the document-feeder cover.

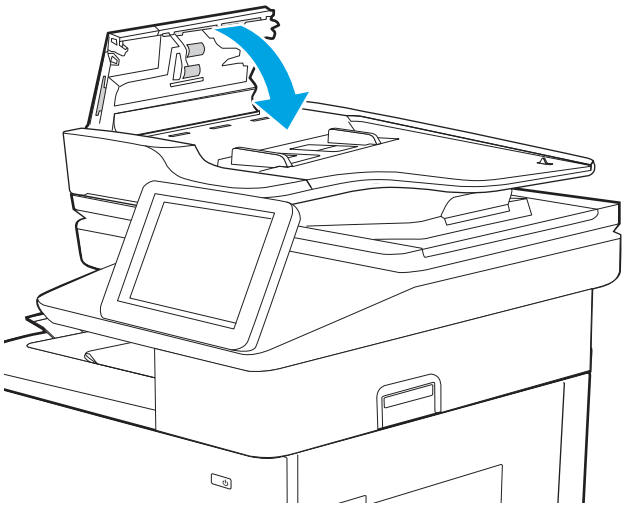

5. . If the error persists, ensure that the paper meets the document feeder (ADF) specifications for the printer.

   This document outlines the supported weights and sizes of the ADF including best practices:

   [HP LaserJet and PageWide Array Enterprise and Managed 500 and 600 - Use the automatic document feeder (ADF)]

6. . Ensure that the input tray is not overloaded and that the tray guides are set to the correct size. Make sure that the paper stack is correctly aligned at the center of the input tray when paper is loaded in the tray. The correct position of the loaded paper is parallel with the direction of travel into the document feeder paper path.

   NOTE: To avoid jams, remove all staples, paper clips, or tape from original documents.

   NOTE: Original documents that are printed on heavy, glossy paper can jam more frequently than originals that are printed on plain paper.

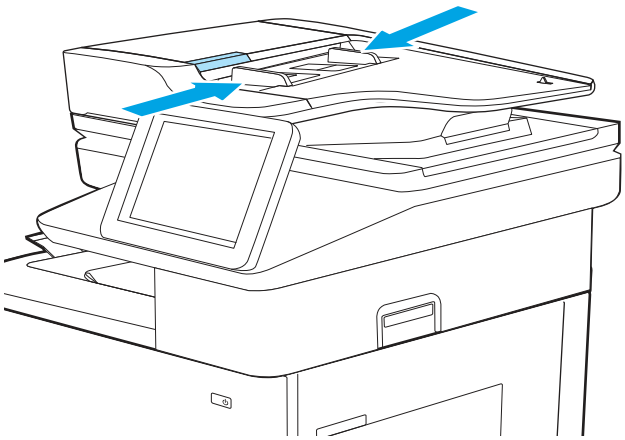

7. . Check the Document Feeder Kit consumable status.

   a. Navigate to and select **Supplies** on the control panel.

   b. Select **Document Feeder Kit**.

   c. See if the **Document Feeder Kit** status is **OK**, **Low**, or **Very Low**.

   d. Recommend that the customer replace the Document Feeder Kit if the status is **Low** or **Very Low**.

Part number: J8J95A/HP 300 ADF Roller Replacement Kit.

To order parts, go to https://parts.hp.com/hpparts/

8. Check and clean the Document Feeder Kit rollers and separation pad by removing any visible lint or dust from each of the feed rollers and the separation pad using a clean lint-free cloth moistened with warm water. View the How to Clean the Pick Rollers in HP LaserJet and PageWide Printers for detailed instructions.

NOTE: Lift up the roller assembly to access and clean the second roller

9. If necessary, replace the Document Feeder Kit rollers and separation pad.

   Part number: J8J95A/HP 300 ADF Roller Replacement Kit

   To order parts, go to https://parts.hp.com/hpparts/

10. If the error persists, contact your HP-authorized service or support provider, or contact customer support at www.hp.com/go/contactHP.

13.B2.D1 jam error in tray 1

Follow these troubleshooting steps in the order presented.

Recommended action for customers

Use the following procedure to check for paper in all possible jam locations related to Tray 1. When a jam occurs, the control panel displays control panel might display a message and an animation that assists in clearing the jam.

- **13.B2.D1 Jam in right door**

1. If jammed paper is visible in Tray 1, clear the jam by gently pulling the paper straight out.

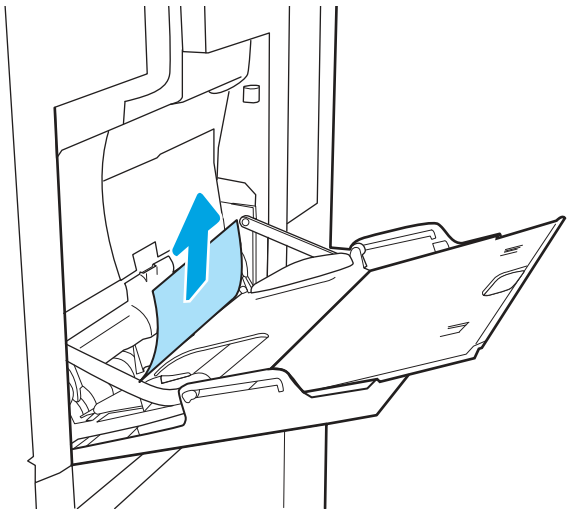

2. If you cannot remove the paper, or if no jammed paper is visible in Tray 1, close Tray 1 and open the right door.

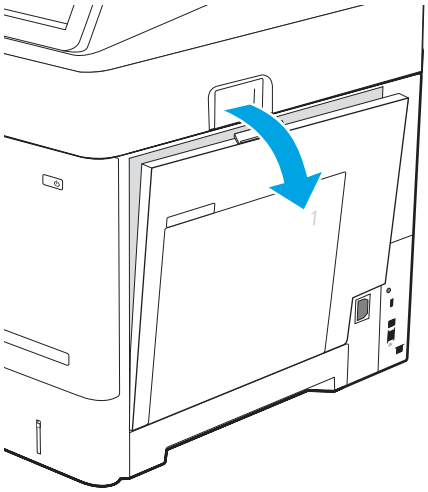

3. Gently pull out any jammed paper.

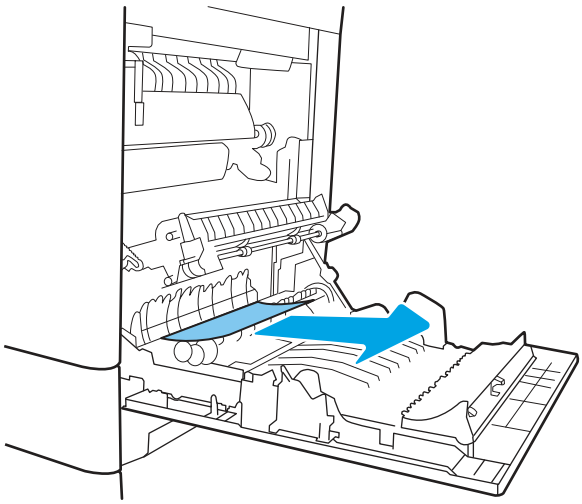

4. If the paper is further through the printer, remove it by gently pulling it out from the upper section.

⚠ CAUTION: Do not touch the rollers on the transfer roller. Contaminants can affect print quality.

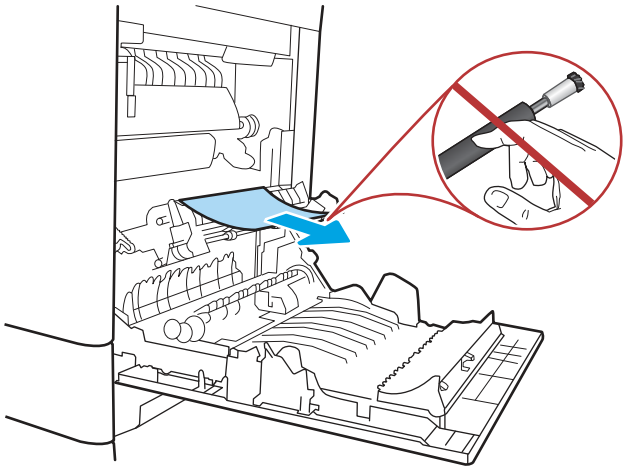

5. Close the right door.

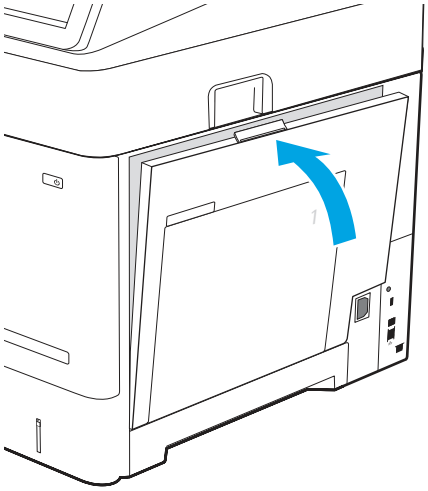

6. If the error persists, ensure the type and quality of the paper being used meets the HP specifications for the printer.
7. Ensure that the paper guides are set to the correct paper size and the paper is loaded into tray 1 correctly without overfilling the tray.

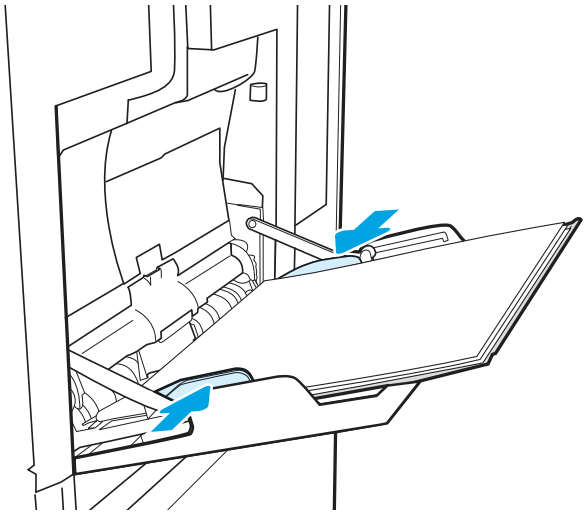

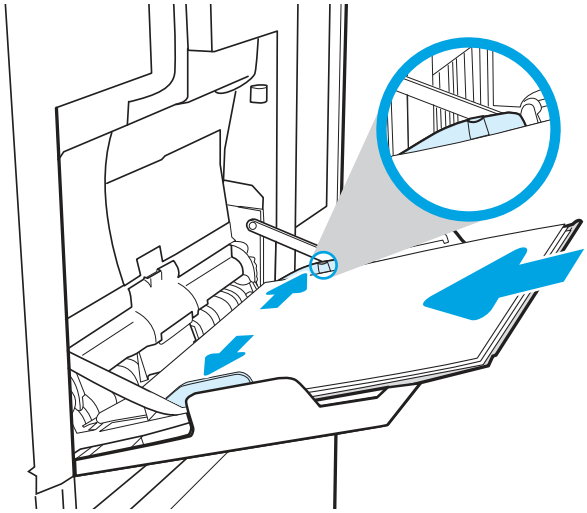

8. . Clean the pickup roller with a dampened lint free cloth as needed.

   a. Remove the tray 1 pickup roller cover. Release two tabs (callout 1) then remove the cover (callout 2).

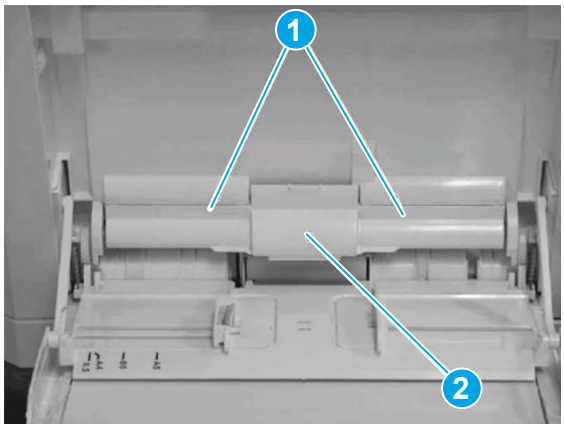

   b. Clean the pickup roller with a dampened lint free cloth as needed.

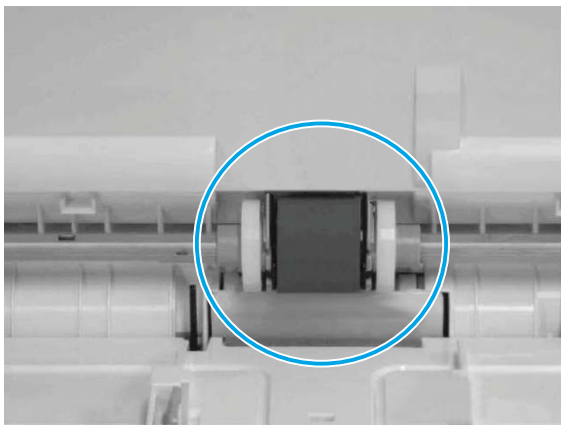

c. Replace the pickup roller cover and test tray 1.

9. If the error persists, contact your HP-authorized service or support provider, or contact customer support at www.hp.com/go/contactHP.

13.B2.D2 jam error in tray 2

Follow these troubleshooting steps in the order presented.

Recommended action for customers

Use the following procedure to check for paper in all possible jam locations related to Tray 2. When a jam occurs, the control panel might display a message and an animation that assists in clearing the jam.

- **13.B2.D2 Jam in right door**. This message appears if there is an issue when pulling paper from tray 2.

1. Pull the tray completely out of the printer by pulling and lifting it up slightly.

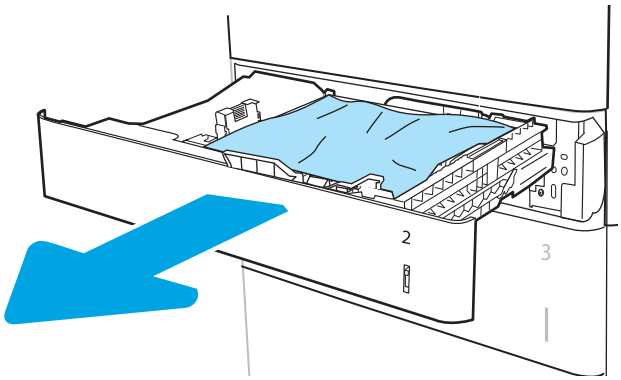

2. Ensure that the protective orange plastic shipping locks are removed, if present.
3. Remove any jammed or damaged sheets of paper. Verify that the tray is not overfilled and that the paper guides are adjusted correctly.

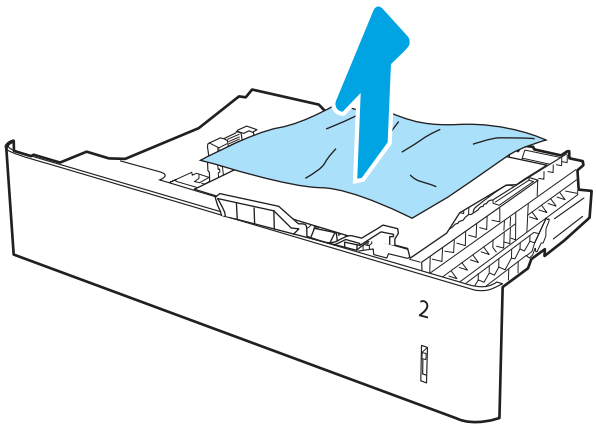

4. Gently remove any paper from the feed rollers inside the printer. First pull the paper to the left to release it, and then pull it forward to remove it.

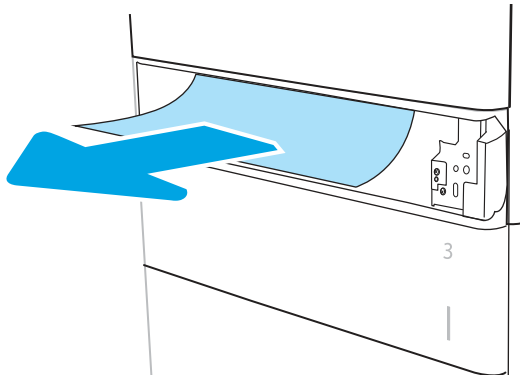

5. Install and close the tray.

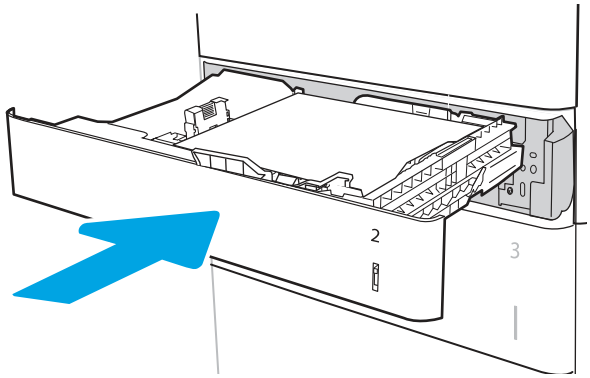

6. Open the right door.

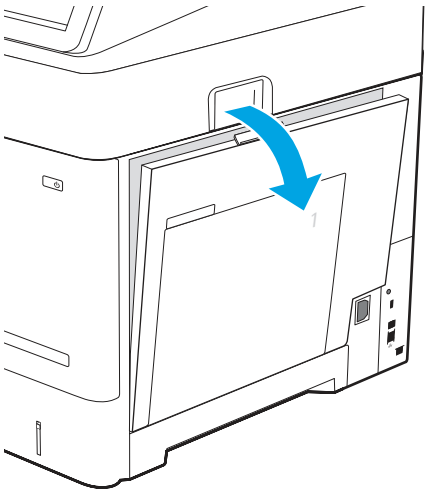

7. Look for and clear any paper present or obstructions in the paper path. Grasp the jammed paper with both hands and pull it straight out to remove it out of the printer.

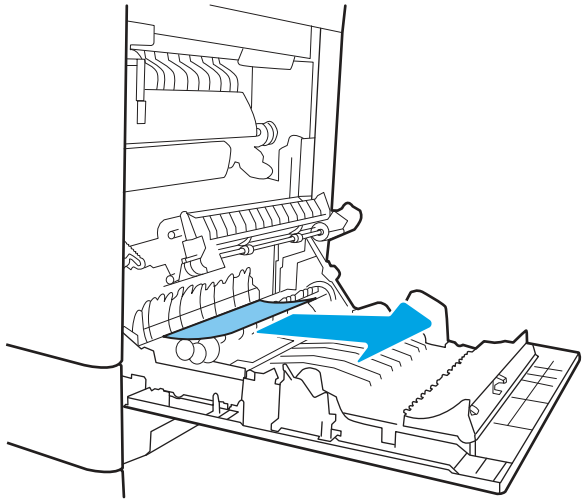

⚠ **CAUTION:** Do not touch the rollers on the transfer roller. Contaminants can affect print quality.

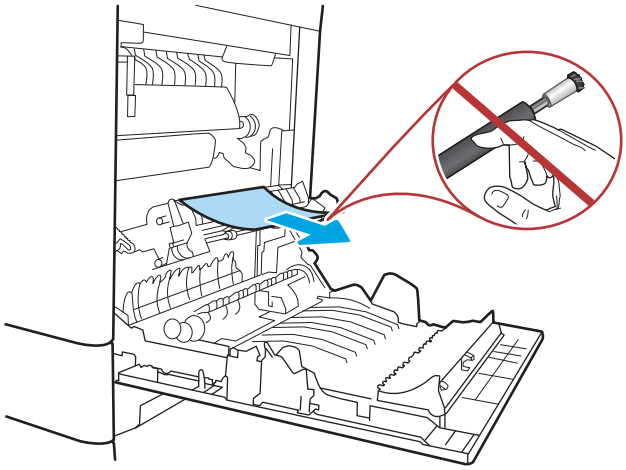

8. Close the right door to allow the printer to attempt to clear the jam message.

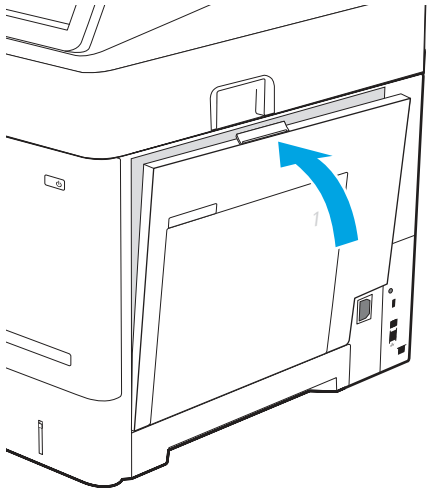

9. . If the error persists, ensure the type and quality of the paper being used meets the HP specifications for the printer.

NOTE: For supported sizes and types view Supported paper sizes and types c05495229.

10. . Ensure that the tray width and length guides are set to the correct paper size for the paper being installed into the tray.

Figure 9-10 Adjust guides

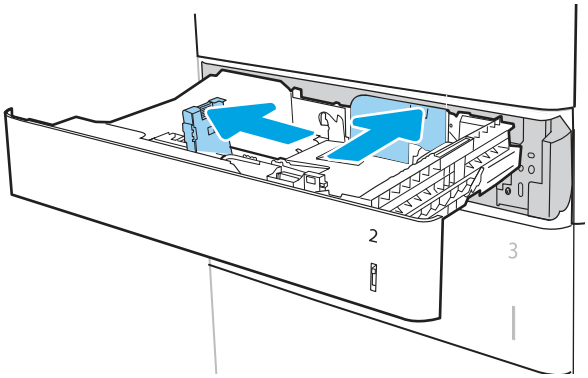

Figure 9-11 Ensure tray size matches paper

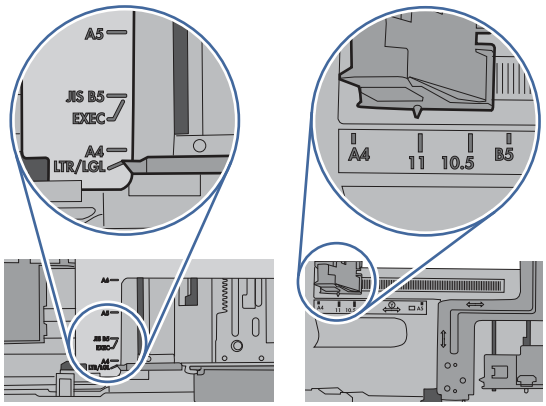

11. . Ensure the paper is not filled above the fill mark (line below 3 triangles). Remove any excess media.

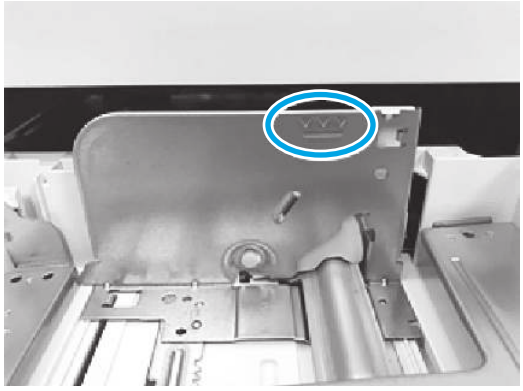

12. . If the error persists, clean or replace the tray roller kit.

Tray 2 roller assembly part number: J8J70-67906

To order parts, go to https://parts.hp.com/hpparts/

13. If the error persists, contact your HP-authorized service or support provider, or contact customer support at www.hp.com/go/contactHP.

13.A3 jam error in tray 3

Follow these troubleshooting steps in the order presented.

Recommended action for customers

Use the following procedure to check for paper in all possible jam locations related to the 550-sheet trays. When a jam occurs, the control panel might display a message and an animation that assists in clearing the jam.

- **13.A3.A3 Jam in tray 3**
- **13.A3.D3 Jam in tray 3**

1. Pull the tray completely out of the printer by pulling and lifting it up slightly.

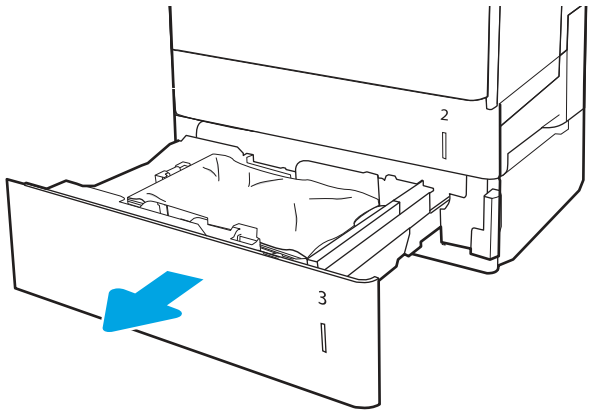

2. Remove any jammed or damaged sheets of paper. Verify that the tray is not overfilled and that the paper guides are adjusted correctly.

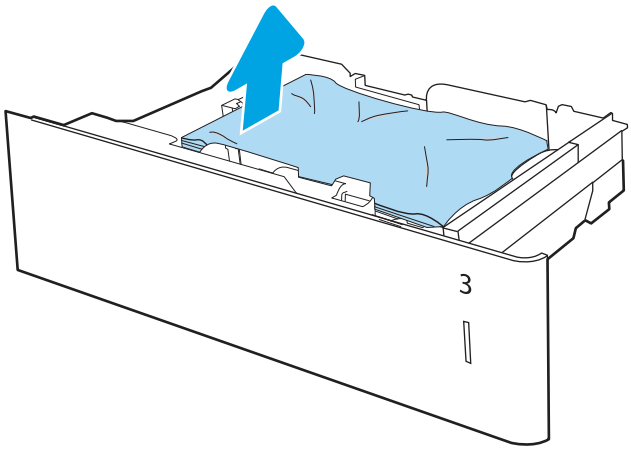

3. Remove any paper from the feed rollers inside the printer. First pull the paper to the left to release it, and then pull it forward to remove it.

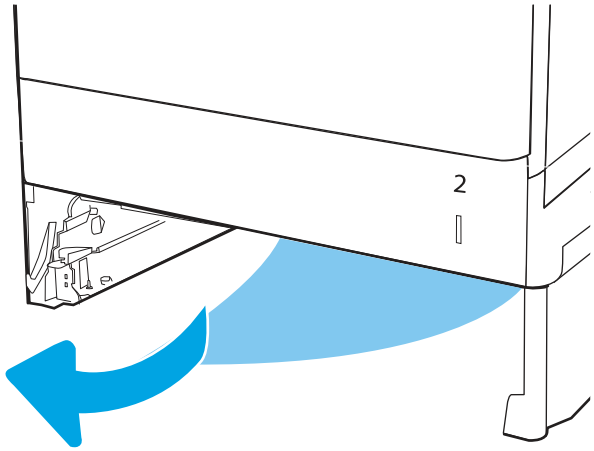

4. Install and close the tray.

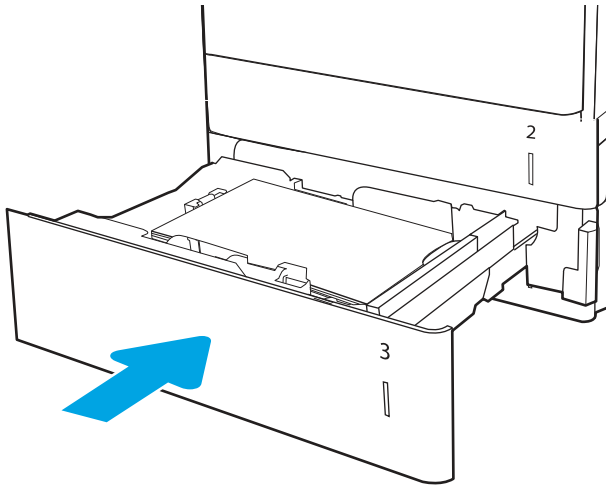

5. Open the lower-right door.

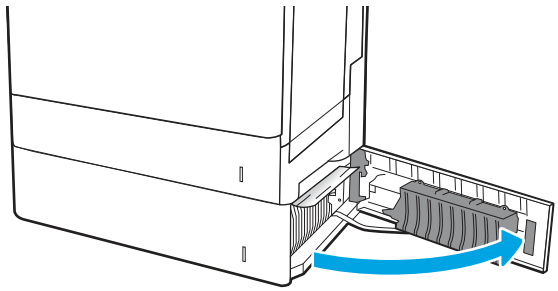

6. Gently pull out any jammed paper.

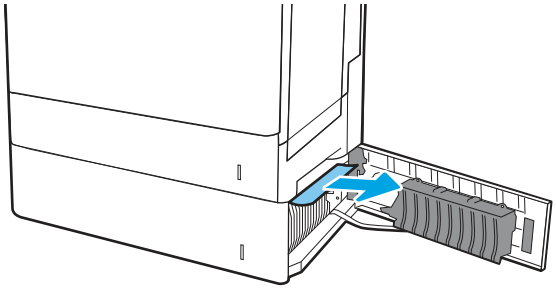

7. Close the lower-right door.

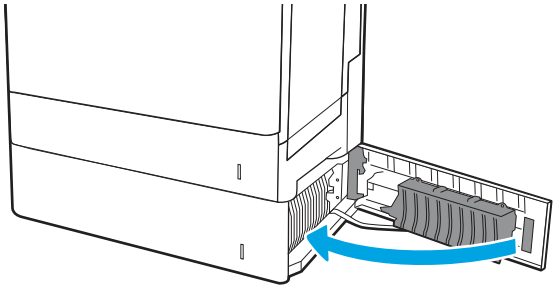

8. Open the right door.

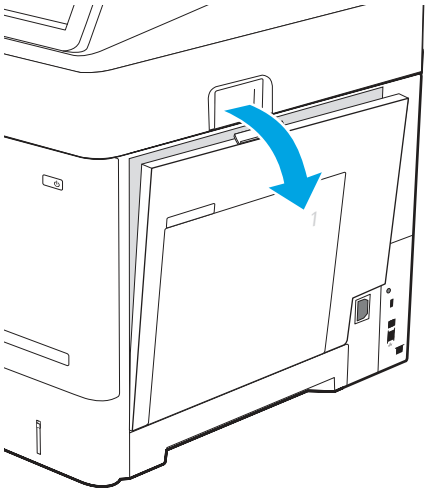

9. . Look for and clear any paper present or obstructions in the paper path. Grasp the jammed paper with both hands and pull it straight out to remove it out of the printer.

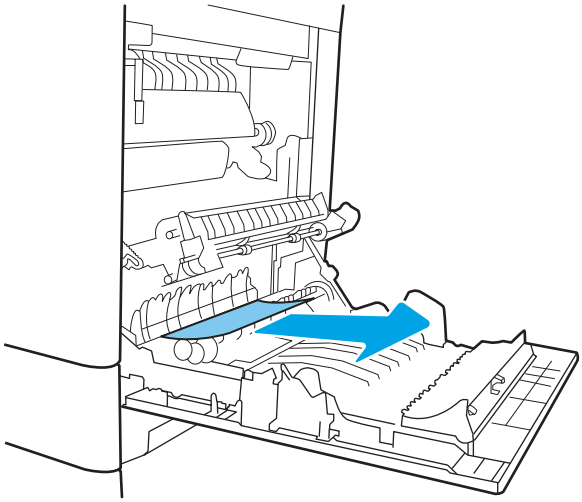

10. . Close the right door to allow the printer to attempt to clear the jam message.

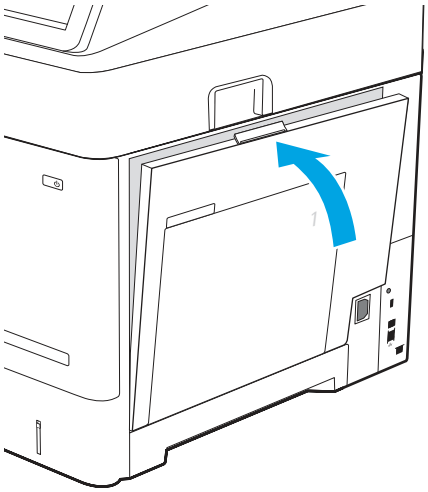

11. . If the error persists, ensure the type and quality of the paper being used meets the HP specifications for the printer.

NOTE: For supported sizes and types view Supported paper sizes and types c05495229.

12. . Ensure that the tray width and length guides are set to the correct paper size for the paper being installed into the tray.

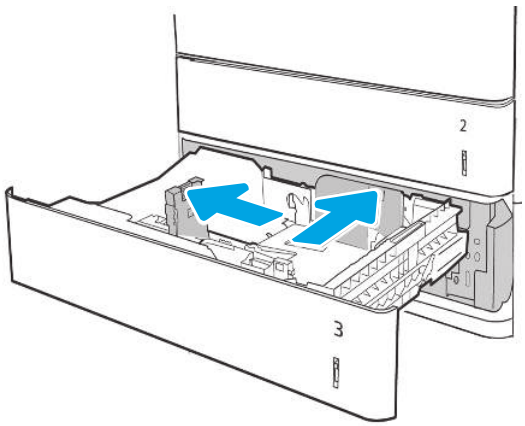

Adjust the tray guides

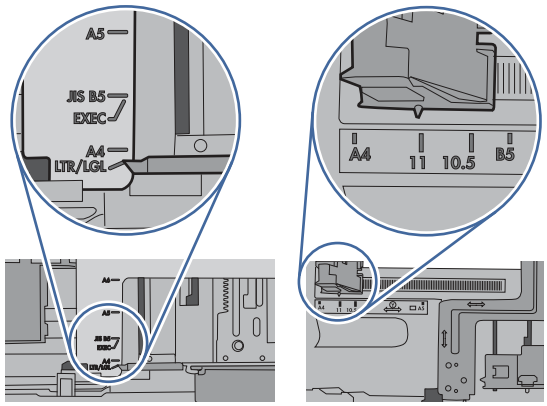

13. Ensure the paper is not filled above the fill mark (line below 3 triangles). Remove any excess media.

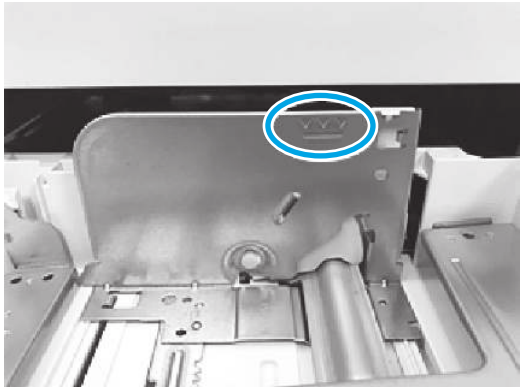

14. Clean or replace the pickup, feed, and separation rollers as needed.

NOTE: Clean the rollers with a dampened lint free cloth or paper.

Roller kit part number: J8J70-67906

To order parts, go to https://parts.hp.com/hpparts/

15. If the error persists, contact your HP-authorized service or support provider, or contact customer support at www.hp.com/go/contactHP.

13.A4 jam error in tray 4

Follow these troubleshooting steps in the order presented.

Recommended action for customers

Use the following procedure to check for paper in all possible jam locations related to the 550-sheet trays. When a jam occurs, the control panel might display a message and an animation that assists in clearing the jam.

- **13.A4.A4 Jam in tray 4**

- **13.A4.D4 Jam in tray 4**

1. Pull the tray completely out of the printer by pulling and lifting it up slightly.

NOTE: For trays in the 3x550 sheet feeder all trays are identical. Image shows tray 3.

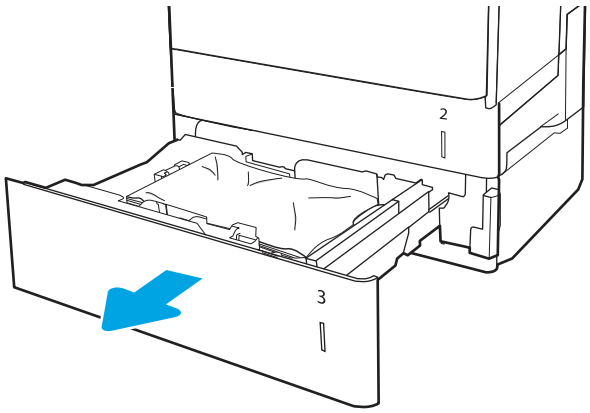

2. Remove any jammed or damaged sheets of paper. Verify that the tray is not overfilled and that the paper guides are adjusted correctly.

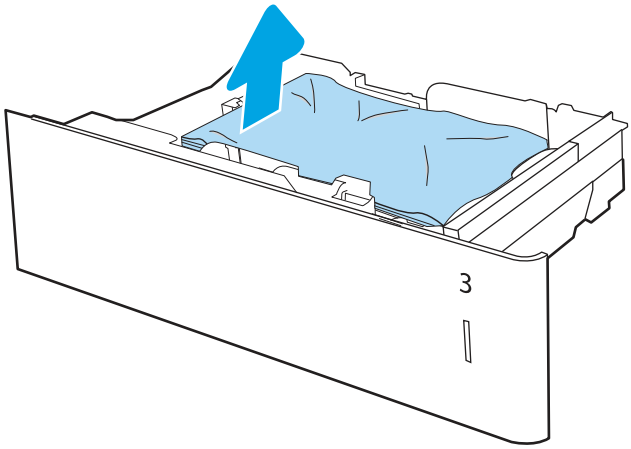

3. Remove any paper from the feed rollers inside the printer. First pull the paper to the left to release it, and then pull it forward to remove it.

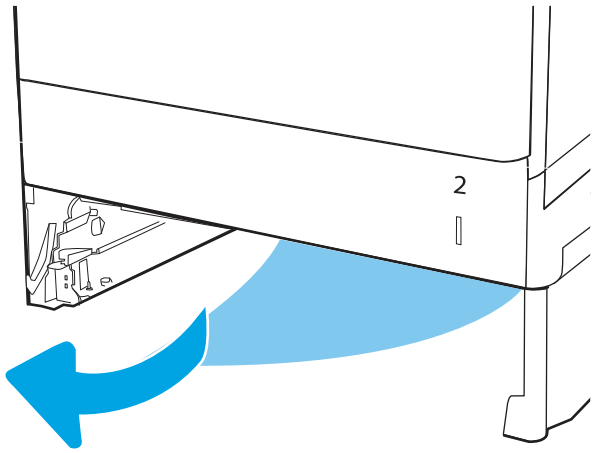

4. Install and close the tray.

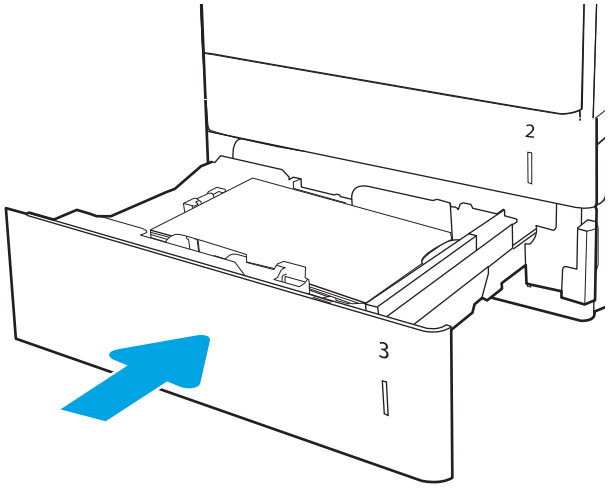

5. Open the lower-right door.

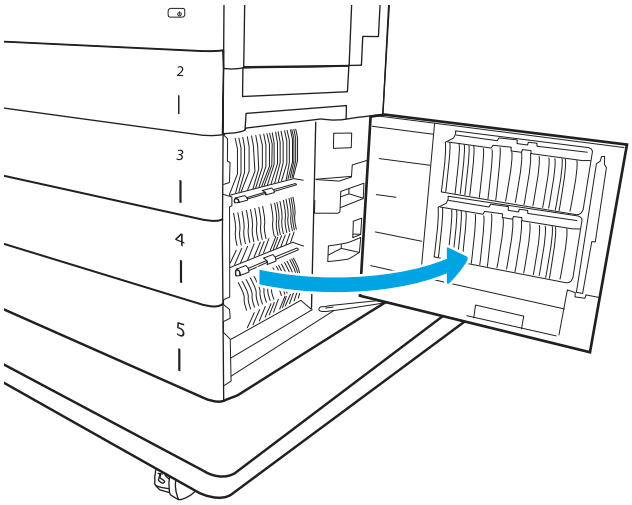

6. Gently pull out any jammed paper from the specified tray.

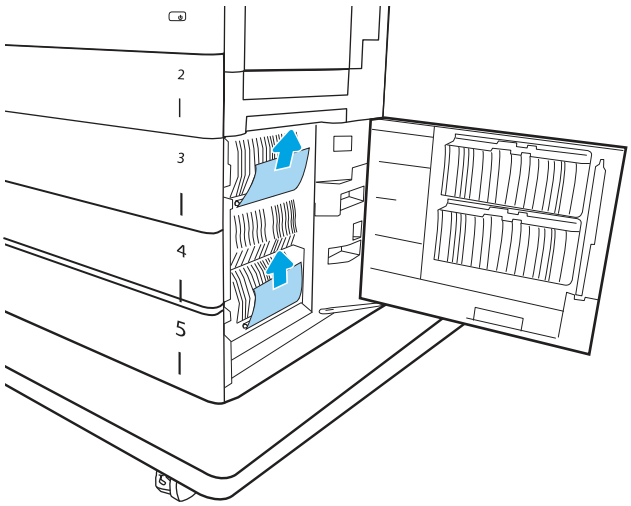

7. Close the lower-right door.

8. . Open the right door.

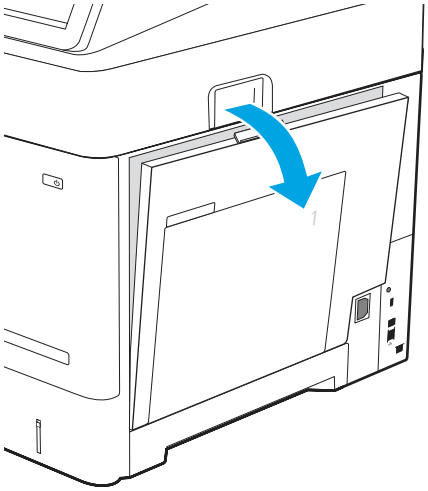

9. . Look for and clear any paper present or obstructions in the paper path. Grasp the jammed paper with both hands and pull it straight out to remove it out of the printer.

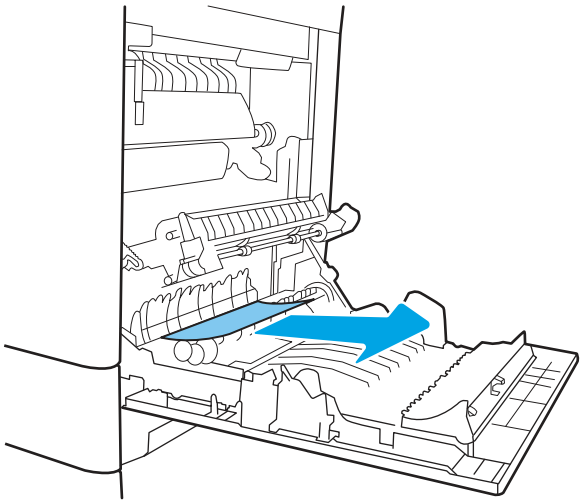

10. . Close the right door to allow the printer to attempt to clear the jam message.

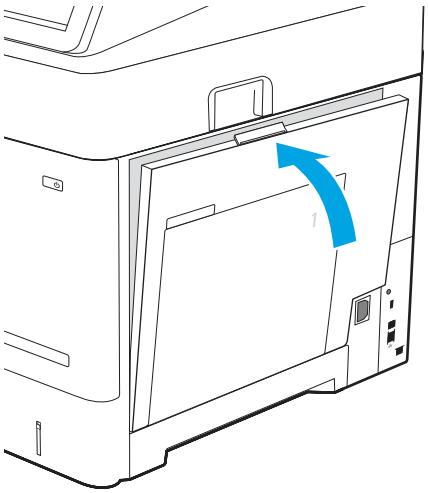

11. . If the error persists, ensure the type and quality of the paper being used meets the HP specifications for the printer.

NOTE: For supported sizes and types view Supported paper sizes and types c05495229.

12. . Ensure that the tray width and length guides are set to the correct paper size for the paper being installed into the tray.

NOTE: For trays in the 3x550 sheet feeder all trays are identical. Image shows tray 3.

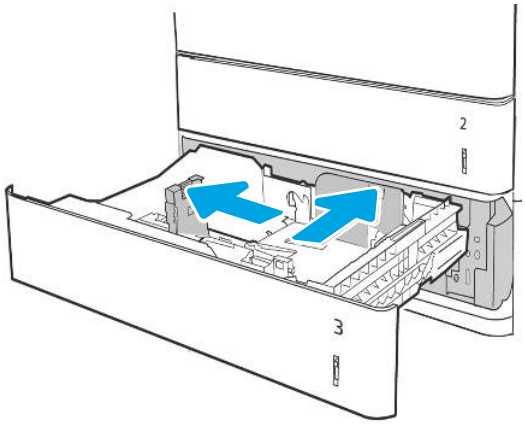

Adjust the tray guides.

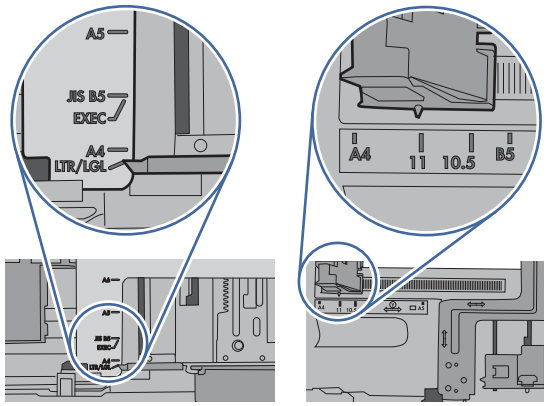

13. . Ensure the paper is not filled above the fill mark (line below 3 triangles). Remove any excess media.

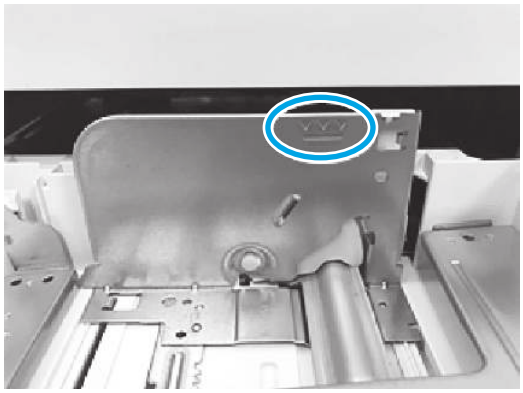

14. . Clean or replace the pickup, feed, and separation rollers as needed.

NOTE: Clean the rollers with a dampened lint free cloth or paper.

Roller kit part number: J8J70-67906

To order parts, go to https://parts.hp.com/hpparts/

15. If the error persists, contact your HP-authorized service or support provider, or contact customer support at www.hp.com/go/contactHP.

13.A4 jam error in high-capacity input (HCI) tray 4

Follow these troubleshooting steps in the order presented.

Recommended action for customers

Use the following procedure to check for paper in all possible jam locations related to the 2,000-sheet high-capacity tray. When a jam occurs, the control panel might display a message and an animation that assists in clearing the jam.

- **13.A4.A4 Jam in tray 4**
- **13.A4.D4 Jam in tray 4**

1. Open the high-capacity input tray.

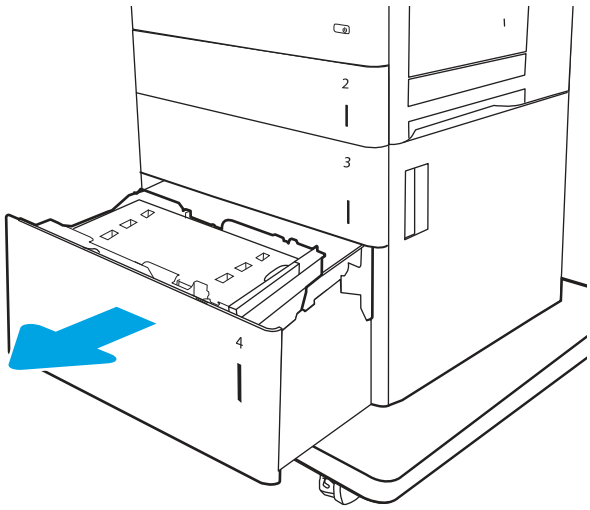

2. Remove any jammed or damaged sheets of paper. Verify that the tray is not overfilled and that the paper guides are adjusted correctly.

3. Remove the paper from the tray.

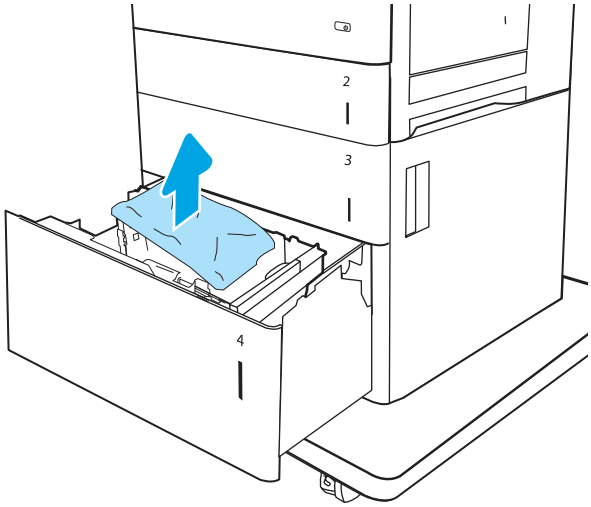

4. Press the release latch on both sides of the tray to release it.

IMPORTANT: There is a release latch on BOTH sides of the tray.

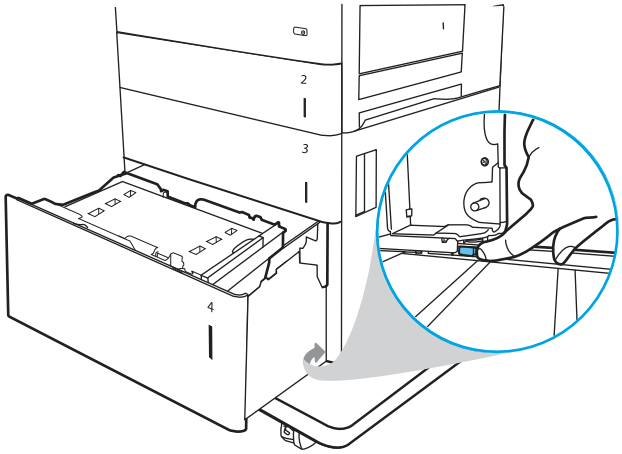

5. Lift the tray up and then pull it straight out to remove it.

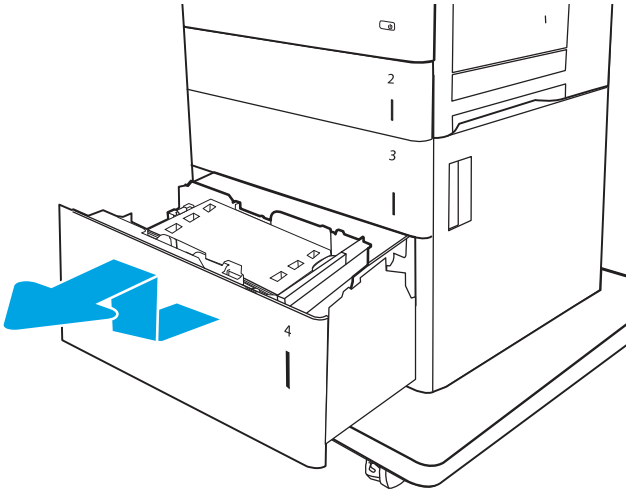

6. . If jammed paper is in the feed area, pull it down to remove it. First pull the paper to the left to release it, and then pull it forward to remove it.

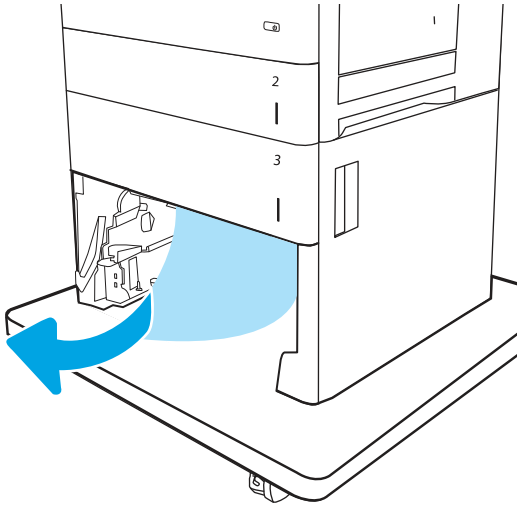

7. . Ensure the tray guides are set to the correct paper size loaded into the tray.

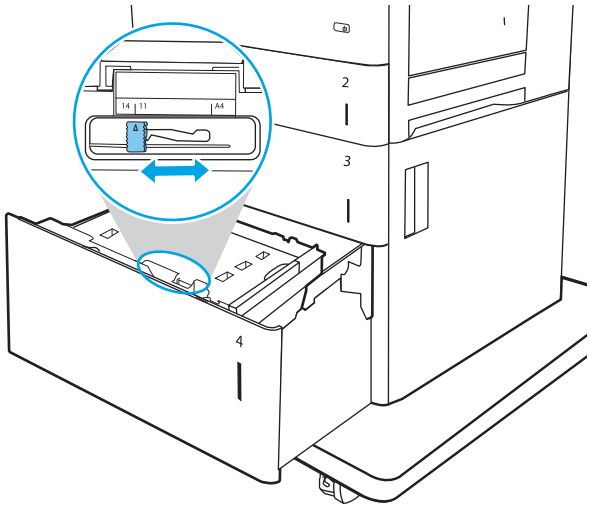

8. . Install the tray, and then load full reams of paper into the tray. Verify that the tray is not overfilled and that the paper guides are adjusted correctly.

NOTE: The tray holds 2,500 sheets of paper. For best results, load full reams of paper. Avoid dividing reams into smaller sections.

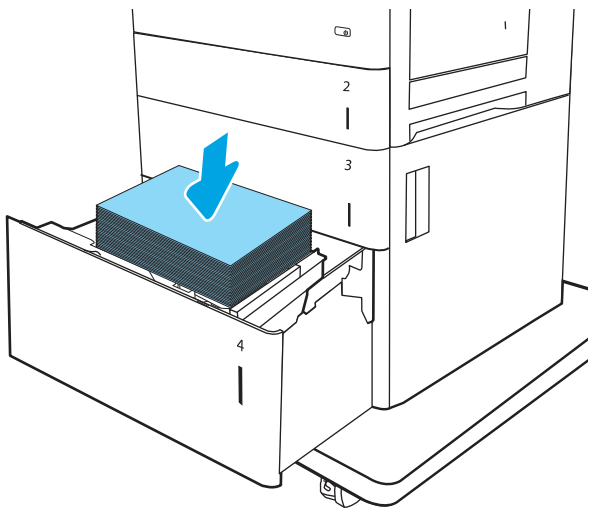

9. . Close the tray.

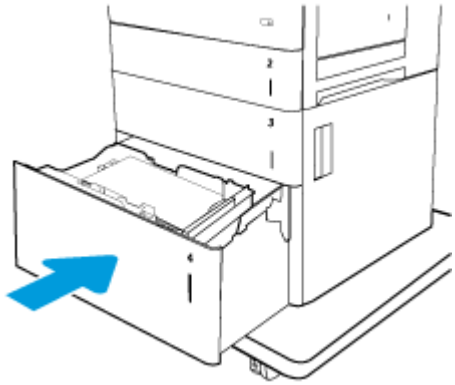

10. . Open the lower-right door.

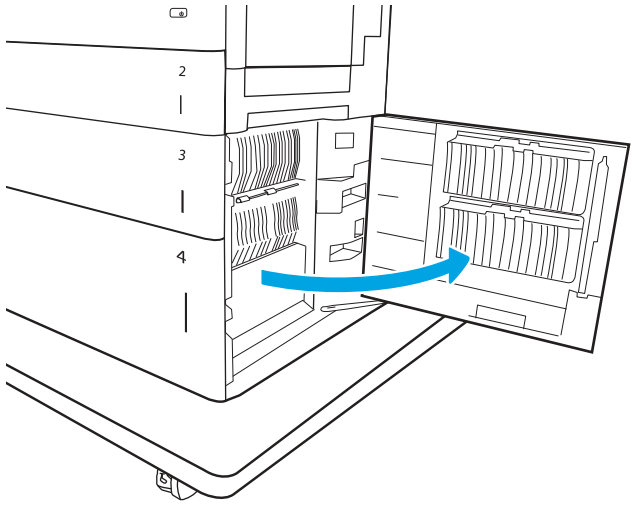

11. . Remove any jammed paper.

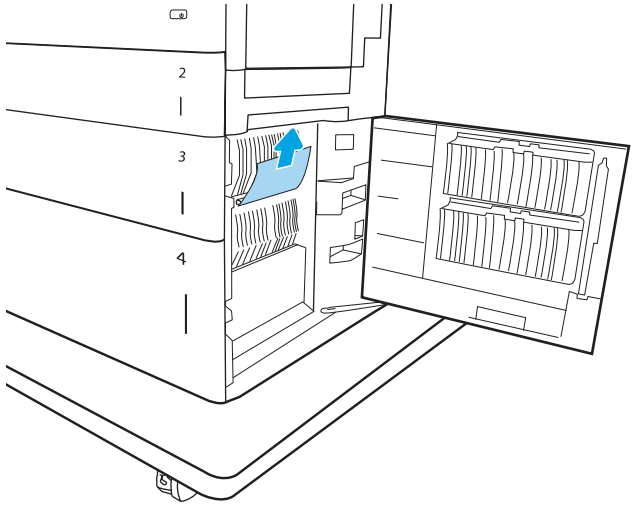

12. Close the lower-right door.

NOTE: If, after clearing the jam, the printer control panel displays a message that there is no paper in the tray or the tray is overfilled, remove the tray and look behind it for any remaining paper.

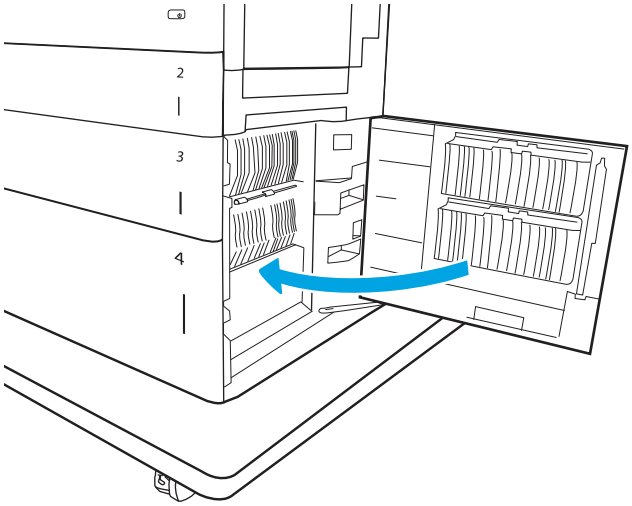

13. Clean or replace the pickup, feed, and separation rollers as needed.

NOTE: Clean the rollers with a dampened lint free cloth or paper.

Roller kit part number: J8J70-67906

To order parts, go to https://parts.hp.com/hpparts/

14. If the error persists, contact your HP-authorized service or support provider, or contact customer support at www.hp.com/go/contactHP.

13.A5 jam error in tray 5

Follow these troubleshooting steps in the order presented.

Recommended action for customers

Use the following procedure to check for paper in all possible jam locations related to the 550-sheet trays. When a jam occurs, the control panel might display a message and an animation that assists in clearing the jam.

- **13.A5.A5 Jam in tray 5**
- **13.A5.D5 Jam in tray 5**

1. Pull the tray completely out of the printer by pulling and lifting it up slightly.

NOTE: For trays in the 3x550 sheet feeder all trays are identical. Image shows tray 3.

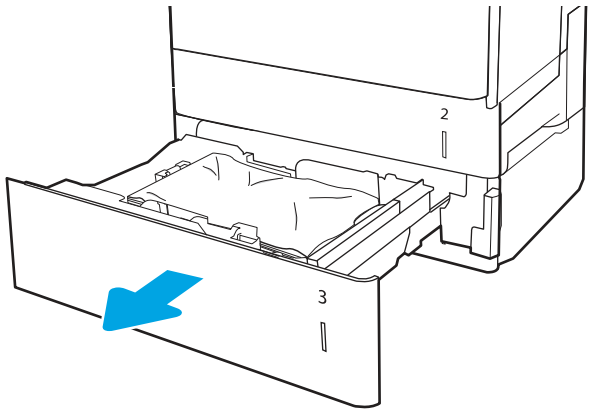

2. Remove any jammed or damaged sheets of paper. Verify that the tray is not overfilled and that the paper guides are adjusted correctly.

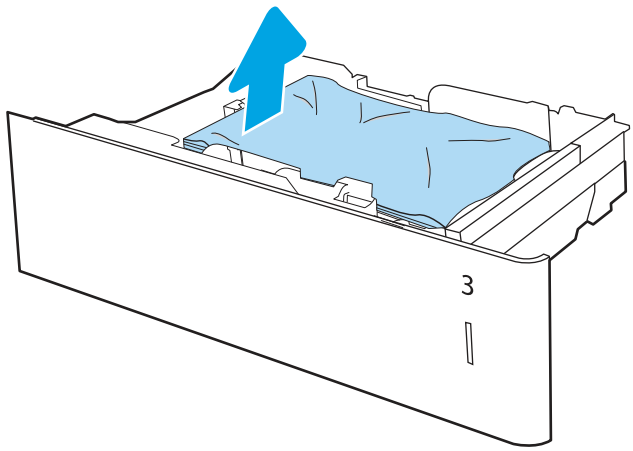

3. Remove any paper from the feed rollers inside the printer. First pull the paper to the left to release it, and then pull it forward to remove it.

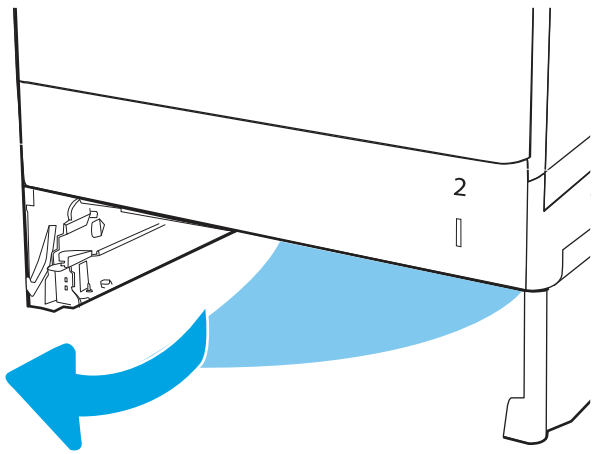

4. Install and close the tray.

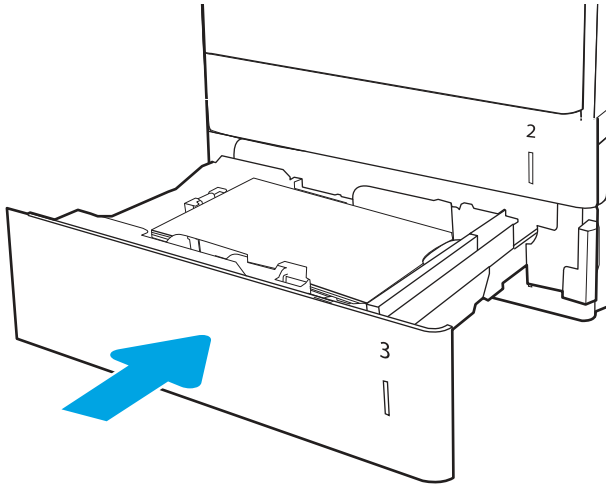

5. Open the lower-right door.

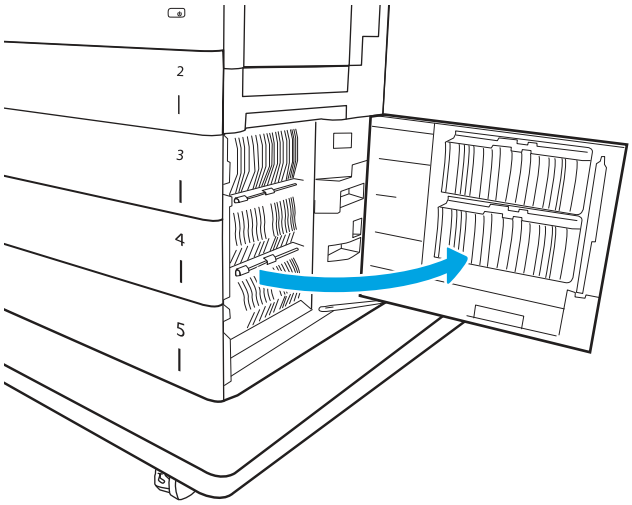

6. Gently pull out any jammed paper from the specified tray.

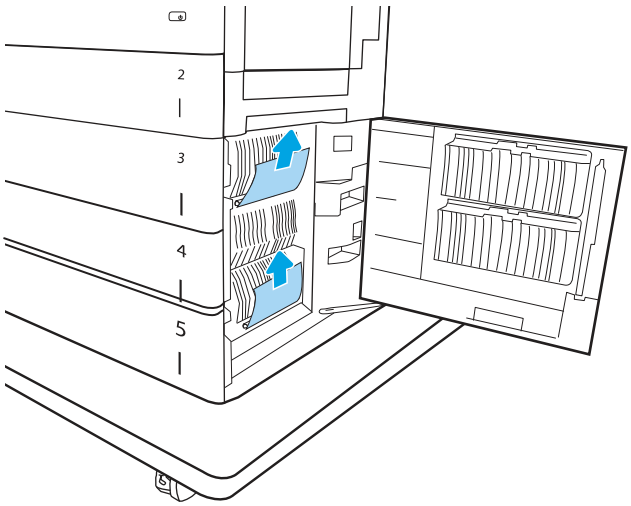

7. Close the lower-right door.

8. . Open the right door.

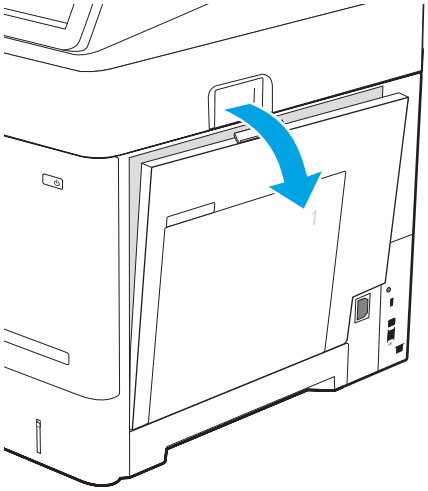

9. . Look for and clear any paper present or obstructions in the paper path. Grasp the jammed paper with both hands and pull it straight out to remove it out of the printer.

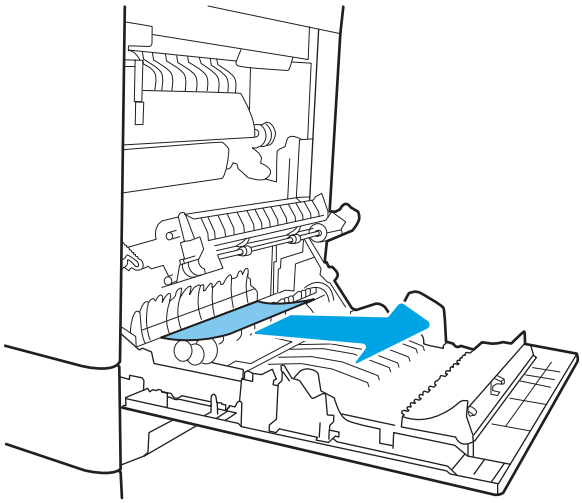

10. . Close the right door to allow the printer to attempt to clear the jam message.

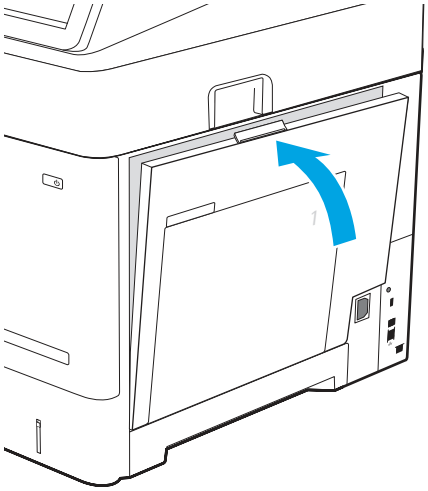

11. . If the error persists, ensure the type and quality of the paper being used meets the HP specifications for the printer.

NOTE: For supported sizes and types view Supported paper sizes and types c05495229.

12. . Ensure that the tray width and length guides are set to the correct paper size for the paper being installed into the tray.

NOTE: For trays in the 3x550 sheet feeder all trays are identical. Image shows tray 3.

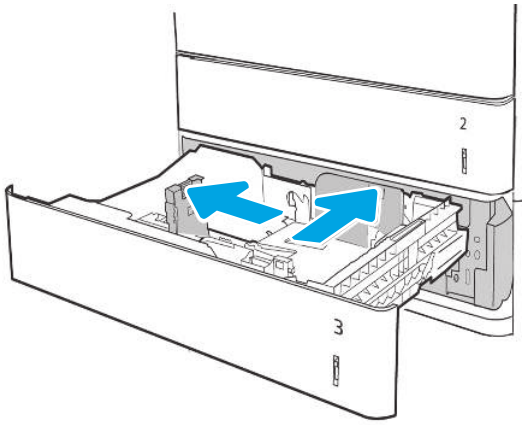

Adjust the tray guides.

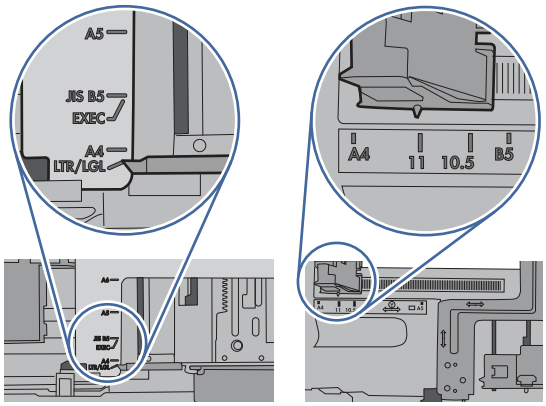

13. . Ensure the paper is not filled above the fill mark (line below 3 triangles). Remove any excess media.

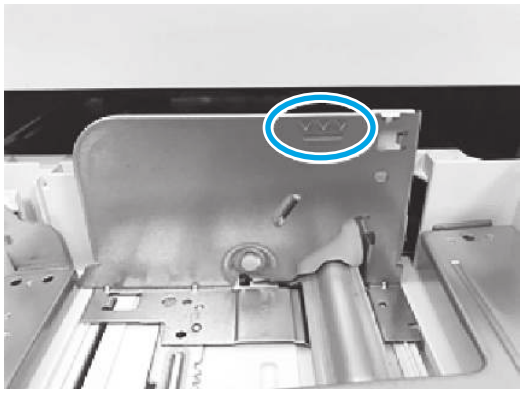

14. . Clean or replace the pickup, feed, and separation rollers as needed.

NOTE: Clean the rollers with a dampened lint free cloth or paper.

Roller kit part number: J8J70-67906

To order parts, go to https://parts.hp.com/hpparts/

15. . If the error persists, contact your HP-authorized service or support provider, or contact customer support at www.hp.com/go/contactHP.

13.B2 jam error in right door

Follow these troubleshooting steps in the order presented.

Recommended action for customers

Use the following procedure to check for paper in the lower-right door. When a jam occurs, the control panel might display a message and an animation that assists in clearing the jam.

- **13.B2.yz Jam in right door.**

  y = A or D

  z = Tray that paper was printing from.

- **13.B2.FF Jam in right door**

1. . Open the right door.

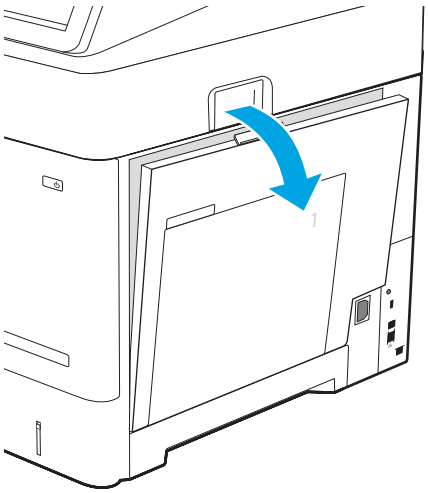

2. Gently remove any jammed paper.

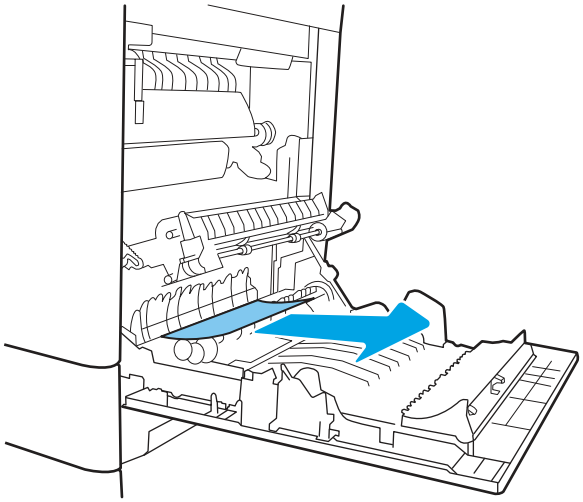

⚠ **CAUTION:** Do not touch the rollers on the transfer roller. Contaminants can affect print quality.

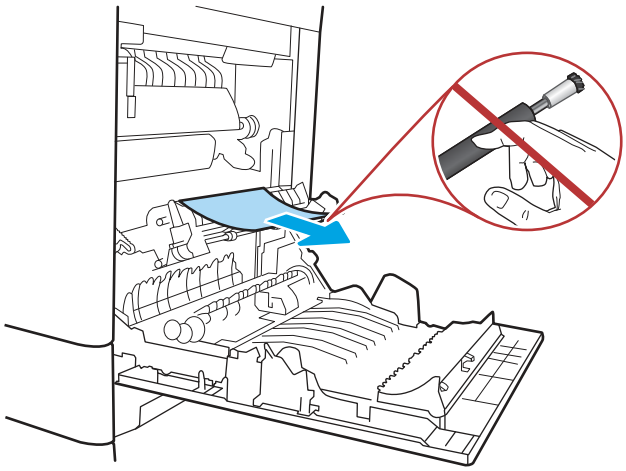

3. Close the lower-right door.

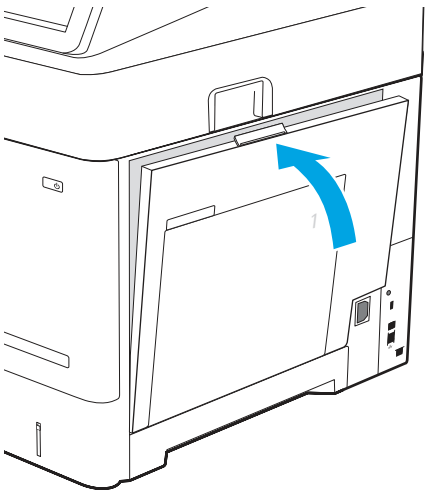

4. Ensure that the tray width and length guides are set to the correct paper size being installed into the tray and that the tray is not over filled above the fill mark or over the tab on the tray.

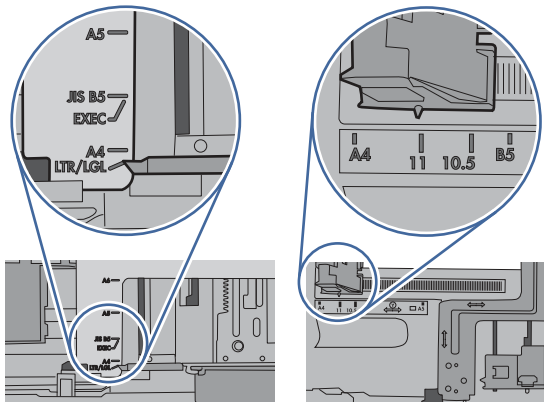

Adjust the tray guides.

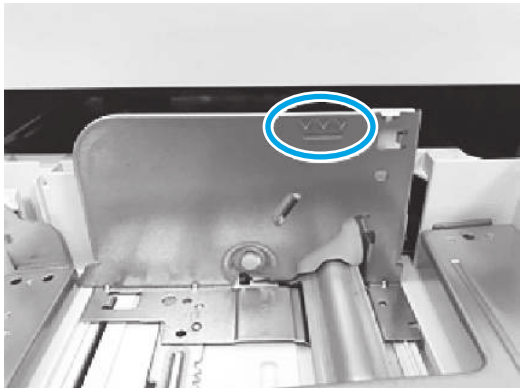

Do not overfill the tray.

5. If the error persists, ensure the type and quality of the paper being used meets the HP specifications for the printer.

NOTE: For supported sizes and types view Supported paper sizes and types c05495229.

6. If the error persists, contact your HP-authorized service or support provider, or contact customer support at www.hp.com/go/contactHP.

13.B4 jam error in right door (fuser)

Follow these troubleshooting steps in the order presented.

Recommended action for customers

Use the following procedure to check for paper in all possible jam locations inside the right door. When a jam occurs, the control panel might display a message and an animation that assists in clearing the jam.

- **13.B4.yz Jam in right door.**

  y = A or D

  z = Tray that paper was printing from.

- **13.B4.FF Jam in right door**

⚠ CAUTION: The fuser can be hot while the printer is in use. Wait for the fuser to cool before handling it.

1. Open the right door.

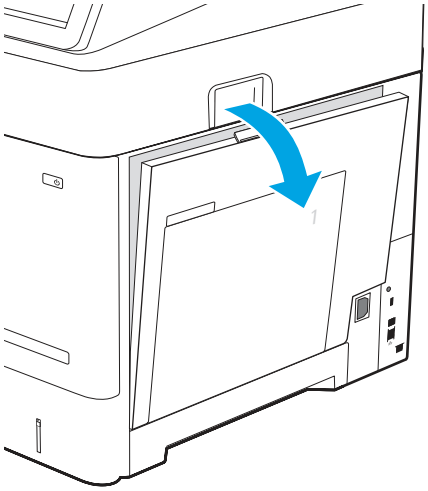

2. Gently remove any jammed paper.

⚠ CAUTION: Do not touch the rollers on the transfer roller. Contaminants can affect print quality.

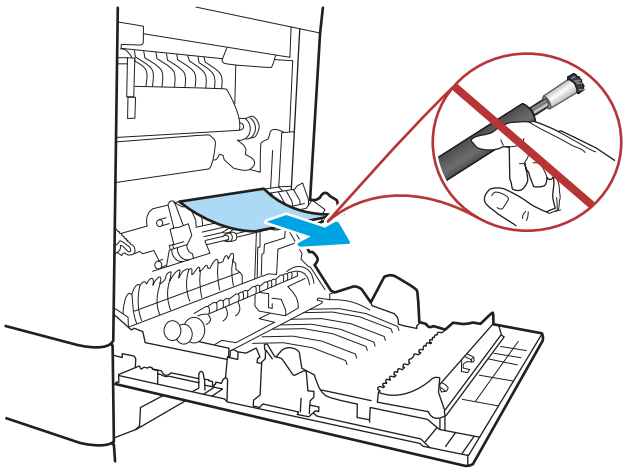

3. Close the lower-right door.

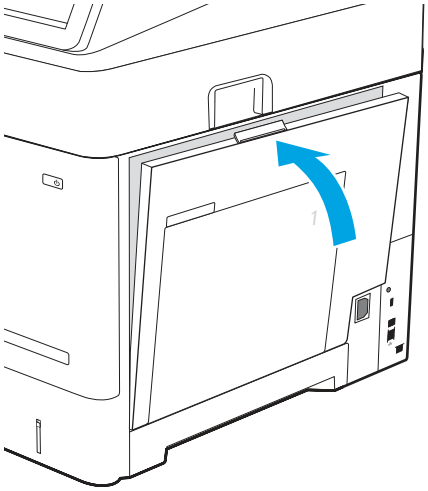

4. If the error persists, ensure the type and quality of the paper being used meets the HP specifications for the printer.

NOTE: For supported sizes and types view Supported paper sizes and types c05495229.

5. If the error persists, contact your HP-authorized service or support provider, or contact customer support at www.hp.com/go/contactHP.

13.B9 jam error in right door (fuser)

Follow these troubleshooting steps in the order presented.

Recommended action for customers

Use the following procedure to check for paper in all possible jam locations inside the right door. When a jam occurs, the control panel might display a message and an animation that assists in clearing the jam.

- **13.B9.yz Jam in right door**
- **13.FF.yz Jam in right door**

CAUTION: The fuser can be hot while the printer is in use. Wait for the fuser to cool before handling it.

1. Open the right door.

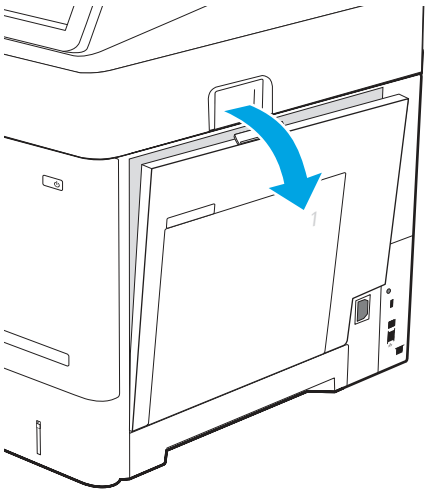

2. If paper is visible entering the bottom of the fuser, gently pull downward to remove it.

⚠ CAUTION: The fuser can be hot while the printer is in use. Wait for the fuser to cool before handling it.

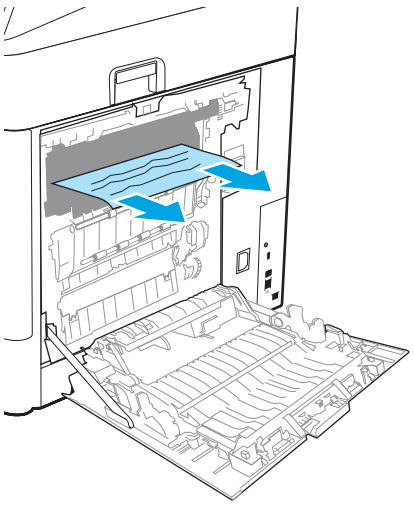

3. If paper is jammed as it enters the output bin, gently pull the paper downward to remove it.

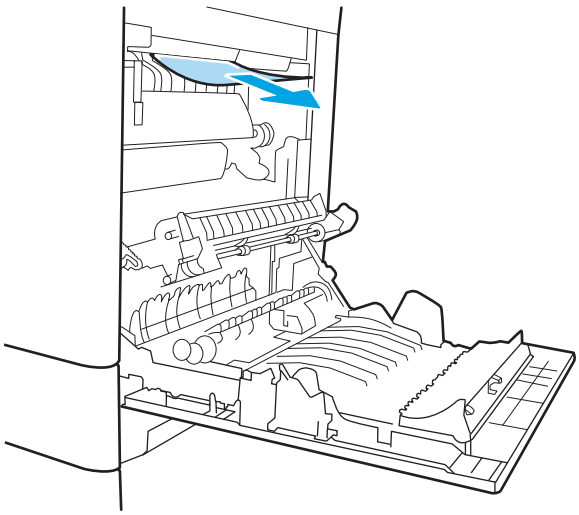

4. Paper could be jammed inside the fuser where it would not be visible. Grasp the fuser handles, lift up slightly, and then pull straight out to remove the fuser.

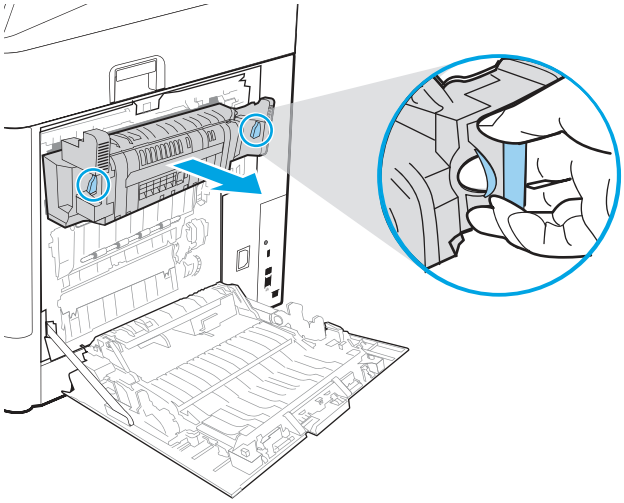

5. Open the jam-access door on the fuser. If paper is jammed inside the fuser, gently pull it straight up to remove it. If the paper tears, remove all paper fragments.

⚠ **CAUTION:** The fuser can be hot while the printer is in use. Wait for the fuser to cool before handling it.

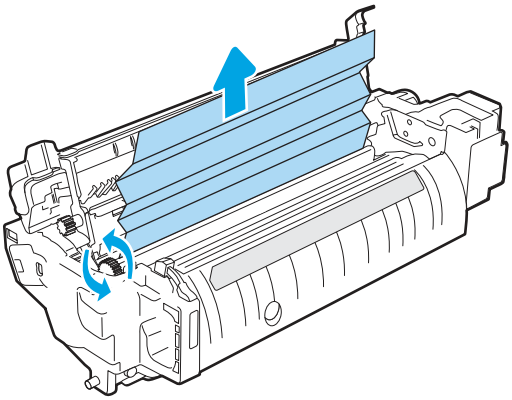

6. Close the jam-access door on the fuser, and push the fuser completely into the printer until it clicks into place.

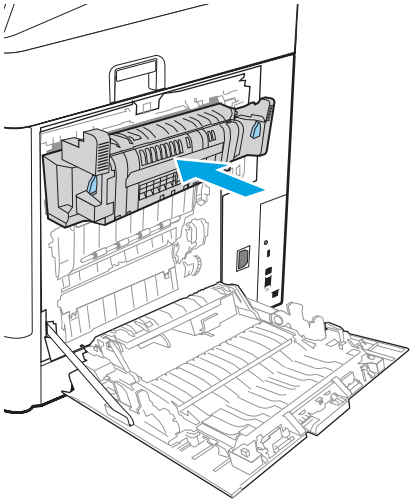

7. Close the lower-right door.

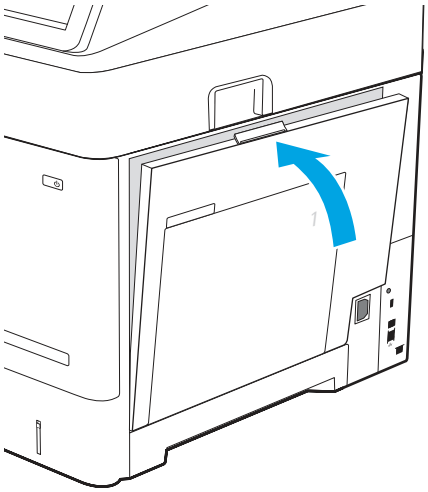

8. If the error persists, ensure the type and quality of the paper being used meets the HP specifications for the printer.

NOTE: For supported sizes and types view Supported paper sizes and types c05495229.

9. If the error persists, contact your HP-authorized service or support provider, or contact customer support at www.hp.com/go/contactHP.

13.D3 jam error in right door (duplexer)

Follow these troubleshooting steps in the order presented.

Recommended action for customers

Use the following procedure to check for paper in all possible jam locations inside the right door. When a jam occurs, the control panel might display a message and an animation that assists in clearing the jam.

- **13.D3.yz Jam in right door**

1. Open the right door.

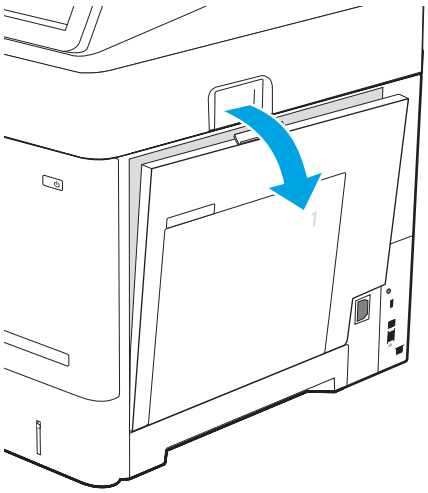

2. If paper is visible entering the bottom of the fuser, gently pull downward to remove it.

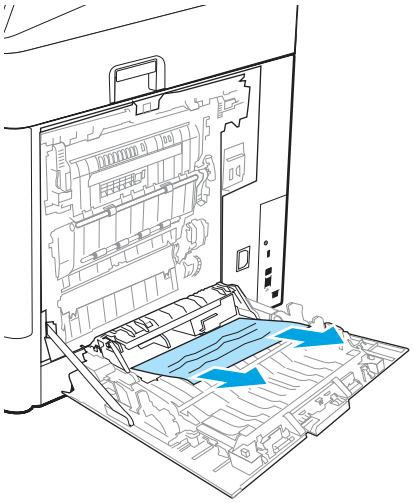

3. If paper is jammed as it enters the output bin, gently pull the paper downward to remove it.

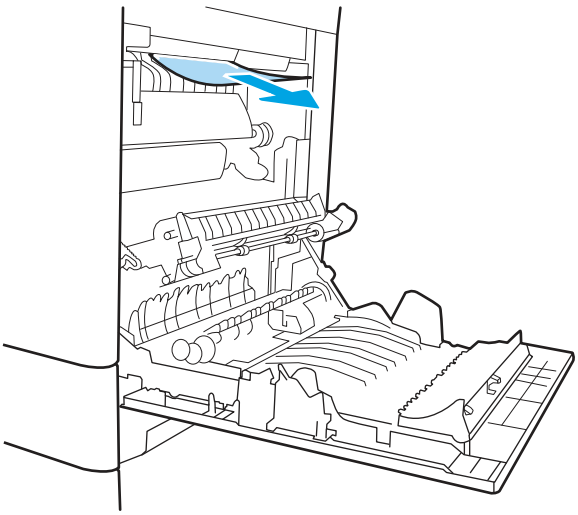

4. . Close the lower-right door.

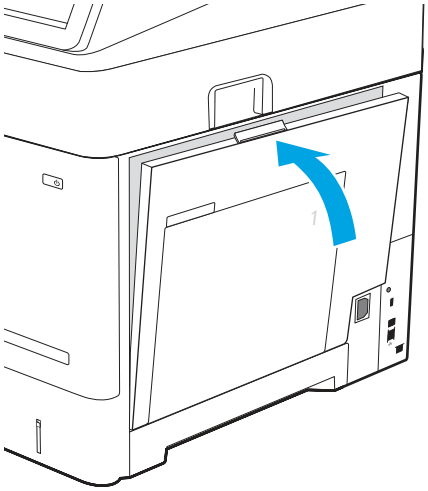

5. . If the error persists, ensure the type and quality of the paper being used meets the HP specifications for the printer.

NOTE: For supported sizes and types view Supported paper sizes and types c05495229.

6. . If the error persists, contact your HP-authorized service or support provider, or contact customer support at www.hp.com/go/contactHP.

13.E1 jam error in output bin

Follow these troubleshooting steps in the order presented.

Recommended action for customers

Use the following procedure to clear jams in the output bin. When a jam occurs, the control panel might display a message and an animation that assists in clearing the jam.

- **13.E1.yz Jam in output bin**

1. If paper is visible in the output bin, grasp the leading edge and gently remove it.

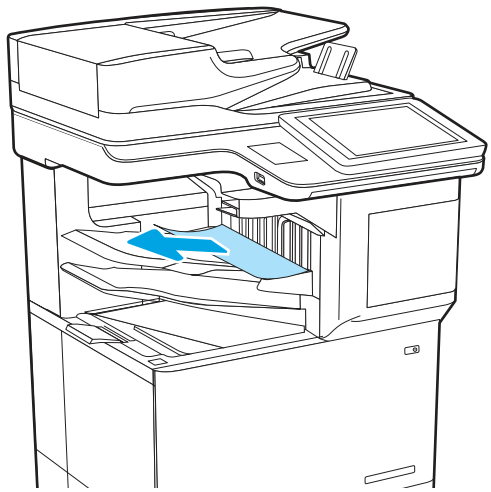

2. Open the right door.

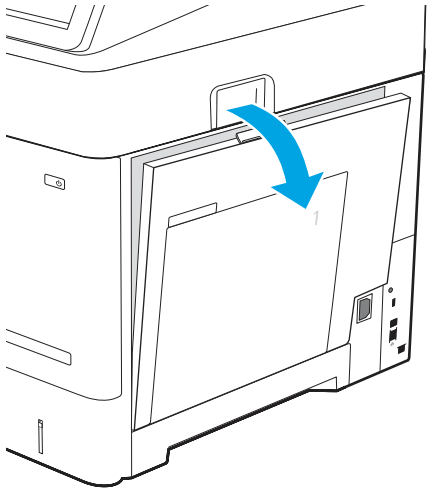

3. If paper is jammed as it enters the output bin, gently pull the paper downward to remove it.

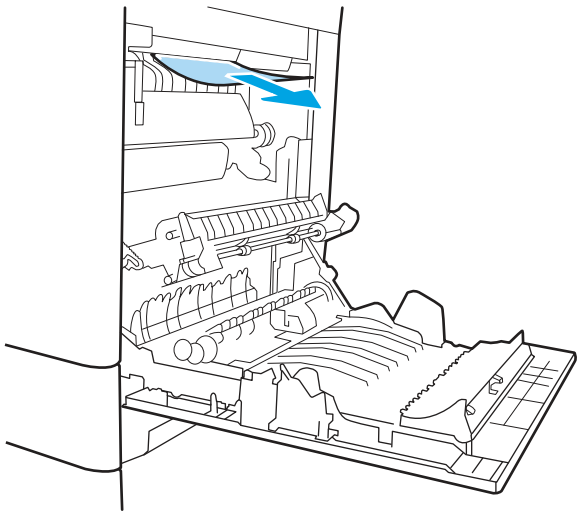

4. Close the lower-right door.

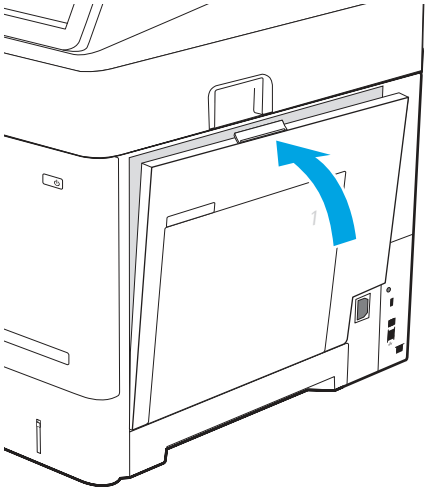

5. If the error persists, ensure the type and quality of the paper being used meets the HP specifications for the printer.

NOTE: For supported sizes and types view Supported paper sizes and types c05495229.

6. If the error persists, contact your HP-authorized service or support provider, or contact customer support at www.hp.com/go/contactHP.

13.60 jam error in stapler/stacker

Follow these troubleshooting steps in the order presented.

Use the following procedure to check for paper in the 3-bin stapler/stacker. When a jam occurs, the control panel might display a message and an animation that assists in clearing the jam.

- **13.60.yz Jam in 3-bin stapler/stacker**

1. Gently remove any jammed paper from the stapler/stacker bins.

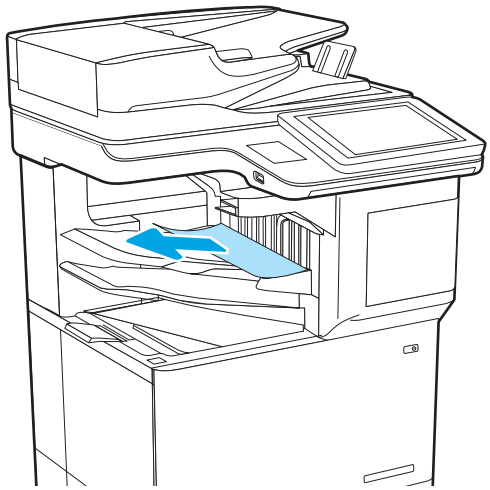

2. Open the stapler/stacker-right upper right door and gently pull paper straight out to remove paper.

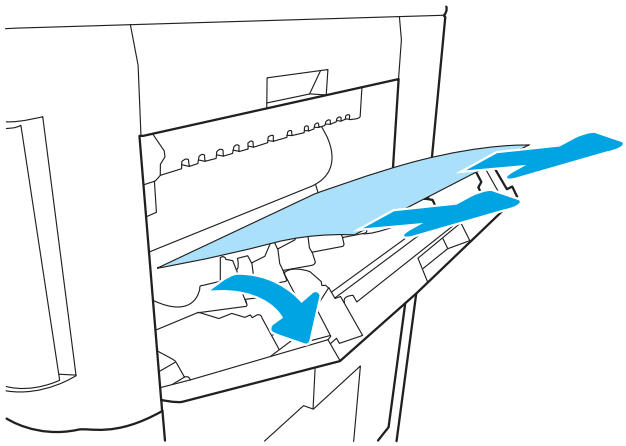

3. Close the stapler/stacker-right upper right door.

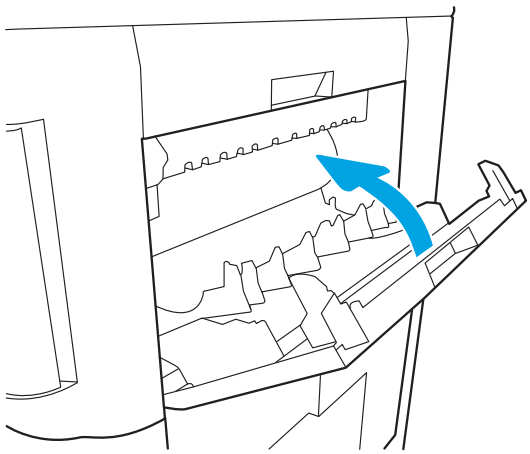

4. Open the right door.

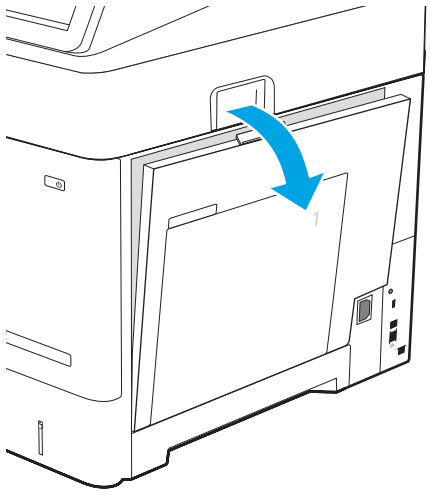

5. . If paper is jammed as it enters the output bin, gently pull the paper downward to remove it.

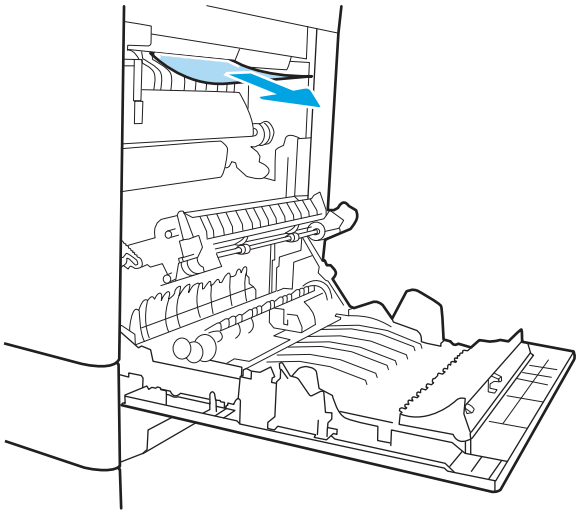

6. . Close the lower-right door.

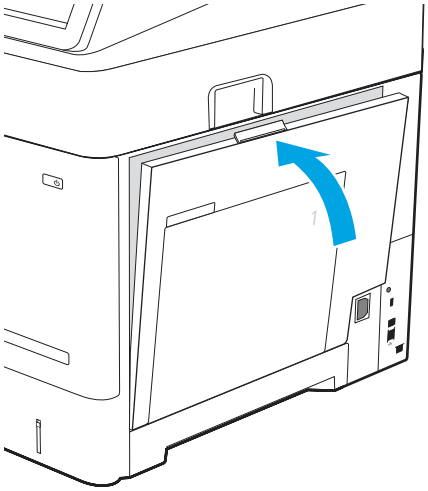

7. . If the error persists, contact your HP-authorized service or support provider, or contact customer support at www.hp.com/go/contactHP.

13.83 jam error in stapler/stacker

Follow these troubleshooting steps in the order presented.

Recommended action for customers

Use the following procedure to check for paper in the 3-bin stapler/stacker. When a jam occurs, the control panel might display a message and an animation that assists in clearing the jam.

- **13.83.yz Jam in 3-bin stapler/stacker**

1. Gently remove any jammed paper from the stapler/stacker bins.

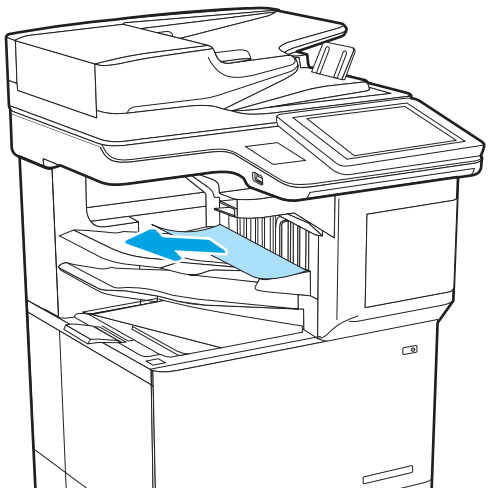

2. Open the stapler/stacker-right upper right door and gently pull paper straight out to remove paper.

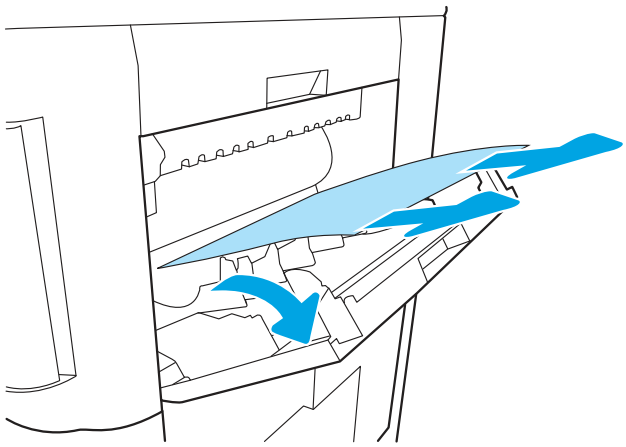

3. Close the stapler/stacker-right upper right door.

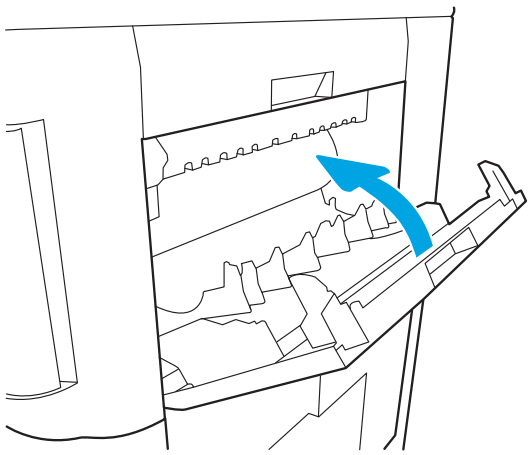

4. Open the right door.

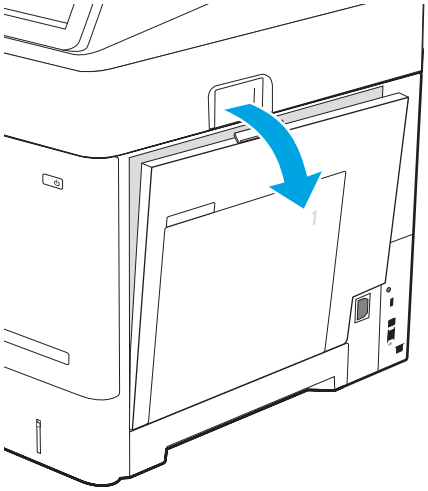

5. If paper is jammed as it enters the output bin, gently pull the paper downward to remove it.

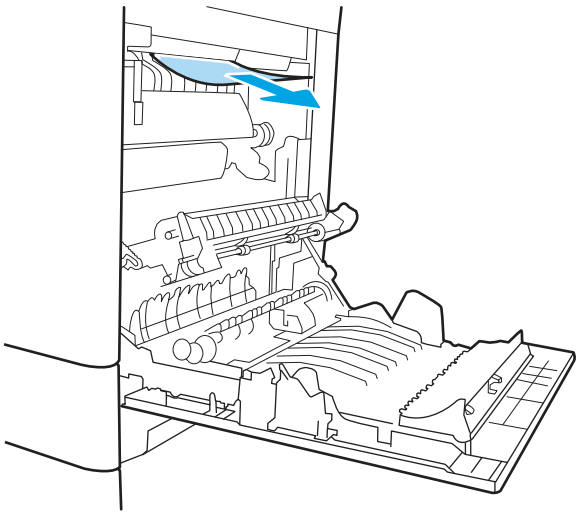

6. Close the lower-right door.

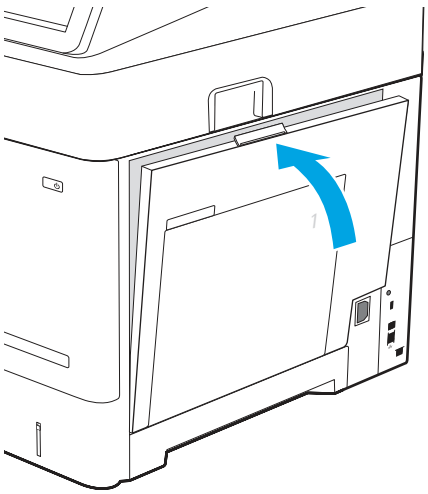

7. If the error persists, contact your HP-authorized service or support provider, or

contact customer support at www.hp.com/go/contactHP.

66.80.yz Staple jam/Stapler malfunction

Follow these troubleshooting steps in the order presented.

Recommended action for customers

Use the following procedure to check for staple jams in the stapler/stacker. When a jam occurs, the control panel might display a message and an animation that assists in clearing the jam.

- **66.80.03 Stapler malfunction**
- **66.80.19 Stapler malfunction**
- **66.80.20 Staple jam**
- **66.80.35 Self priming malfunction**

1. Check the output device for any paper jams or obstructions. Clear paper jams and debris as needed.
2. Gently remove any jammed paper from the stapler/stacker bins.

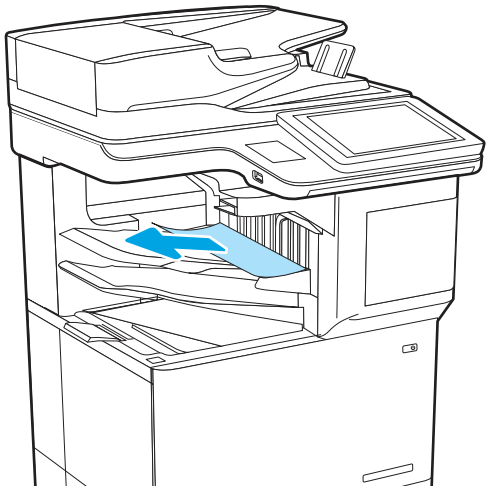

3. Open the stapler/stacker-right upper right door and gently pull paper straight out to remove paper.

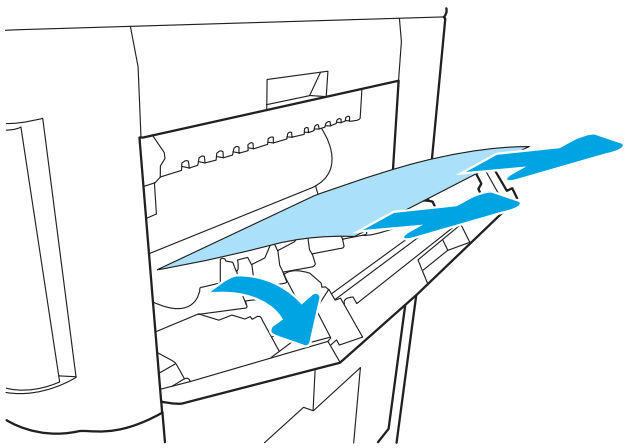

4. Close the stapler/stacker-right upper right door.

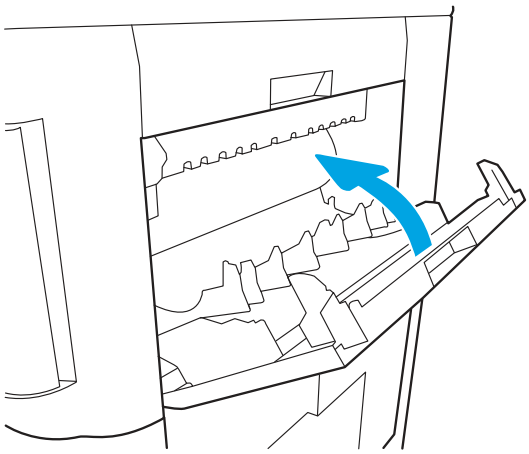

5. Remove the staple cartridge and check for jammed staples. Clear all jammed staples.

   Open the staple cartridge door.

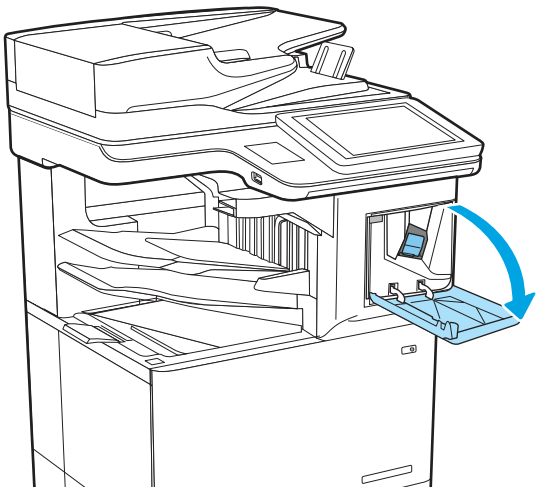

6. Remove the staple cartridge.

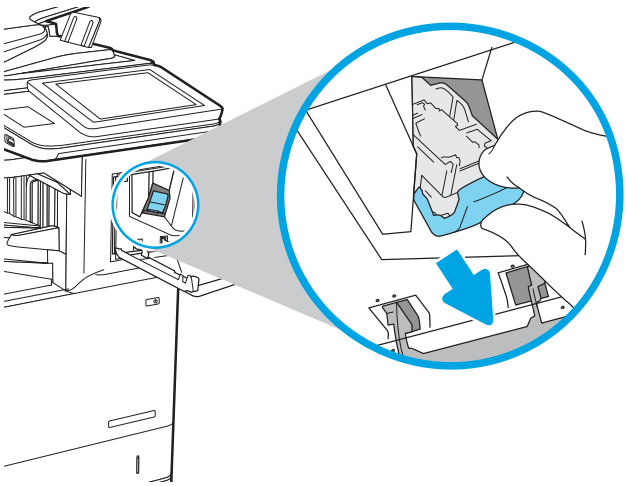

7. Open the staple cartridge and remove any jammed or damaged staples.

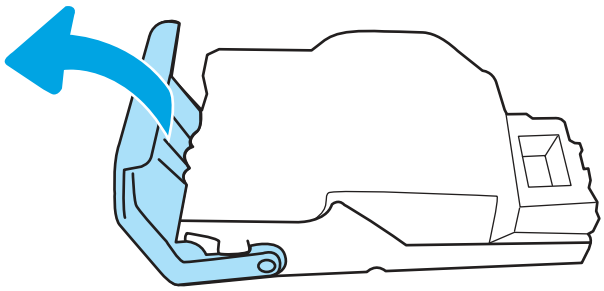

8. Close the staple cartridge and reinstall.

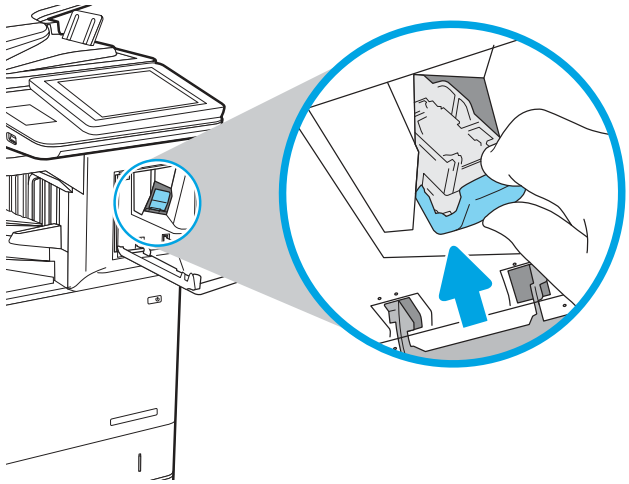

9. Close stapler door.

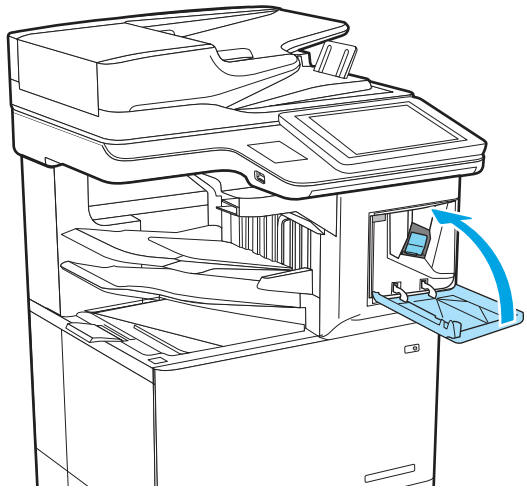

10. Perform a staple job to see if the error has cleared.

11. If the error persists, contact your HP-authorized service or support provider, or

contact customer support at www.hp.com/go/contactHP.

Resolving mono print quality problems

Use the information below to troubleshoot print-quality and image-quality problems on mono (black and white) HP LaserJet Enterprise printers.

Introduction

The troubleshooting steps can help resolve the following defects:

- Blank pages
- Black pages
- Curled paper
- Dark or light bands
- Dark or light streaks
- Fuzzy print
- Gray background or dark print
- Light print
- Loose toner
- Missing toner
- Scattered dots of toner
- Skewed images
- Smears
- Streaks

Troubleshoot print quality

To resolve print-quality issues, try these steps in the order presented.

To troubleshoot specific image defects, see Troubleshoot image defects.

Update the printer firmware

Try upgrading the printer firmware.

For instructions, go to www.hp.com/support.

Print from a different software program

Try printing from a different software program.

If the page prints correctly, the problem is with the software program from which you were printing.

Check the paper-type setting for the print job

Check the paper type setting when printing from a software program and the printed pages have smears, fuzzy or dark print, curled paper, scattered dots of toner, loose toner, or small areas of missing toner.

Check the paper type setting on the control panel

Check the paper type setting on the printer control panel, and change the setting as needed.

1. Open and close the paper tray.
2. Follow the control panel prompts to confirm or modify the paper type and size settings for the tray.
3. Make sure the paper loaded meets specifications.
4. Adjust the humidity and resistance setting on the control panel to match the environment.
   a. Open the following menus:
      i. Settings
      ii. Copy/Print
      iii. Print quality
      iv. Adjust paper type
   b. Select the paper type that matches the type loaded in the tray.
   c. Use the arrows to increase or decrease the humidity and resistance setting.
5. Make sure the driver settings match the control panel settings.

NOTE: The print driver settings will override any control panel settings.

Check the paper type setting (Windows)

Check the paper type setting for Windows, and change the setting as needed.

NOTE: The print driver settings will override any control panel settings.

1. From the software program, select the **Print** option.
2. Select the printer, and then click the **Properties** or **Preferences** button.
3. Click the **Paper/Quality** tab.
4. From the **Paper Type** drop-down list, click the **More...** option.
5. Expand the list of **Type is:** options.
6. Expand the category of paper types that best describes your paper.
7. Select the option for the type of paper you are using, and click the **OK** button.
8. Click the **OK** button to close the **Document Properties** dialog box. In the **Print** dialog box, click the **OK** button to print the job.

Check the paper type setting (macOS)

Check the paper type setting for macOS, and change the setting as needed.

1. Click the **File** menu, and then click the **Print** option.
2. In the **Printer** menu, select the printer.
3. By default, the print driver displays the **Copies & Pages** menu. Open the menus drop-down list, and then click the **Finishing** menu.
4. Select a type from the **Media Type** drop-down list.
5. Click the **Print** button.

Check toner-cartridge status

Follow these steps to check the estimated life remaining in the toner cartridges and if applicable, the status of other replaceable maintenance parts.

Step one: Print the Supplies Status Page

The supplies status page indicates the cartridge status.

1. From the Home screen on the printer control panel, select the Reports menu.
2. Select the Configuration/Status Pages menu.
3. Select Supplies Status Page, and then select Print to print the page.

Step two: Check supplies status

Check the supplies status report as follows.

1. Look at the supplies status report to check the percent of life remaining for the toner cartridges and, if applicable, the status of other replaceable maintenance parts.

   Print quality problems can occur when using a toner cartridge that is at its estimated end of life. The supplies status page indicates when a supply level is very low. After an HP supply has reached the very low threshold, HP's premium protection warranty on that supply has ended.

   The toner cartridge does not need to be replaced now unless the print quality is no longer acceptable. Consider having a replacement available to install when print quality is no longer acceptable.

   If you determine that you need to replace a toner cartridge or other replaceable maintenance parts, the supplies status page lists the genuine HP part numbers.

2. Check to see if you are using a genuine HP cartridge.

   A genuine HP toner cartridge has the word "HP" on it, or has the HP logo on it. For more information on identifying HP cartridges go to www.hp.com/go/learnaboutsupplies.

Print a cleaning page

During the printing process paper, toner, and dust particles can accumulate inside the printer and can cause print-quality issues such as toner specks or spatter, smears, streaks, lines, or repeating marks.

Follow these steps to clean the printer paper path:

1. From the Home screen on the printer control panel, select the Support Tools menu.

2. Select the following menus:
   a. Maintenance
   b. Calibration/Cleaning
   c. Cleaning Page
3. Select Print to print the page.

   A **Cleaning...** message displays on the printer control panel. The cleaning process takes a few minutes to complete. Do not turn the printer off until the cleaning process has finished. When it is finished, discard the printed page.

Visually inspect the toner cartridge or cartridges

Follow these steps to inspect each toner cartridge:

1. Remove the toner cartridge from the printer, and verify that the sealing tape has been removed.
2. Check the memory chip for damage.
3. Examine the surface of the green imaging drum.

   ⚠ CAUTION: Do not touch the imaging drum. Fingerprints on the imaging drum can cause print-quality problems.

4. If you see any scratches, fingerprints, or other damage on the imaging drum, replace the toner cartridge.
5. Reinstall the toner cartridge and print a few pages to see if the problem has resolved.

Check paper and the printing environment

Use the following information to check the paper selection and the printing environment.

Step one: Use paper that meets HP specifications

Some print-quality problems arise from using paper that does not meet HP specifications.

- Always use a paper type and weight that this printer supports.
- Use paper that is of good quality and free of cuts, nicks, tears, spots, loose particles, dust, wrinkles, voids, staples, and curled or bent edges.
- Use paper that has not been previously printed on.
- Use paper that does not contain metallic material, such as glitter.
- Use paper that is designed for use in laser printers. Do not use paper that is designed only for use in Inkjet printers.
- Use paper that is not too rough. Using smoother paper generally results in better print quality.

Step two: Check the environment

The environment can directly affect print quality and is a common cause of print-quality or paper-feeding issues. Try the following solutions:

- Move the printer away from drafty locations, such as open windows or doors, or air-conditioning vents.
- Make sure the printer is not exposed to temperatures or humidity outside of printer specifications.
- Do not place the printer in a confined space, such as a cabinet.
- Place the printer on a sturdy, level surface.
- Remove anything that is blocking the vents on the printer. The printer requires good air flow on all sides, including the top.
- Protect the printer from airborne debris, dust, steam, grease, or other elements that can leave residue inside the printer.

Step three: Set the individual tray alignment

Follow these steps when text or images are not centered or aligned correctly on the printed page when printing from specific trays.

1. From the Home screen on the printer control panel, select the Settings menu.
2. Select the following menus:
   a. Copy/Print or Print
   b. Print Quality
   c. Image Registration
3. Select Tray, and then select the tray to adjust.
4. Select Print Test Page, and then follow the instructions on the printed pages.
5. Select Print Test Page again to verify the results, and then make further adjustments if necessary.
6. Select Done to save the new settings.

Try a different print driver

Try a different print driver when printing from a software program and the printed pages have unexpected lines in graphics, missing text, missing graphics, incorrect formatting, or substituted fonts.

Download any of the following drivers from the HP Web site: www.hp.com/support/ljM634MFP, www.hp.com/support/ljM635MFP, or www.hp.com/support/ljM636MFP.

Table 9-3 Print drivers

Driver	Description
HP PCL.6 driver	If available, this printer-specific print driver supports older operating systems like Windows XP and Windows Vista. For a list of supported operating systems, go to www.hp.com/go/support.
HP PCL 6 driver	This printer-specific print driver supports Windows 7 and newer operating systems that support version 3 drivers. For a list of supported operating systems, go to www.hp.com/go/support.
HP PCL-6 driver	This product-specific print driver supports Windows 8 and newer operating systems that support version 4 drivers. For a list of supported operating systems, go to www.hp.com/go/support.

Table 9-3 Print drivers (continued)

Driver	Description
HP UPD PS driver	• Recommended for printing with Adobe software programs or with other highly graphics-intensive software programs • Provides support for printing from Postscript emulation needs, or for Postscript flash font support
HP UPD PCL 6	• Recommended for printing in all Windows environments • Provides the overall best speed, print quality, and printer feature support for most users • Developed to align with Windows Graphic Device Interface (GDI) for best speed in Windows environments • Might not be fully compatible with third-party and custom software programs that are based on PCL 5

Check the EconoMode settings

HP does not recommend the full-time use of EconoMode. If EconoMode is used full-time, the toner supply might outlast the mechanical parts in the toner cartridge. If print quality begins to degrade and is no longer acceptable, consider replacing the toner cartridge.

NOTE: This feature is available with the PCL 6 print driver for Windows. If you are not using that driver, you can enable the feature by using the HP Embedded Web Server.

Follow these steps if the entire page is too dark or too light.

1. From the software program, select the **Print** option.
2. Select the printer, and then click the **Properties** or **Preferences** button.
3. Click the **Paper/Quality** tab, and locate the **Print Quality** area.
4. If the entire page is too dark, use these settings:
   - Select the **600 dpi** option, if available.
   - Select the **EconoMode** check box to enable it.

   If the entire page is too light, use these settings:
   - Select the **FastRes 1200** option, if available.
   - Clear the **EconoMode** check box to disable it.
5. Click the **OK** button to close the **Document Properties** dialog box. In the **Print** dialog, click the **OK** button to print the job.

Adjust print density

Complete the following steps to adjust the print density.

1. From the Home screen on the printer control panel, select the Settings menu.
2. Open the following menus:

a. Copy/Print or Print

b. Print Quality

c. Toner Density

3. Move the slider toward either Less or More to the desired density setting.

Troubleshoot image defects

Review examples of image defects and steps to resolve these defects.

Table 9-4 Image defects table quick reference

Sample	Description	Possible solutions
Table 9-11 Light print on page 211	Table 9-9 Gray background or dark print on page 210	Table 9-7 Blank page – No print on page 209 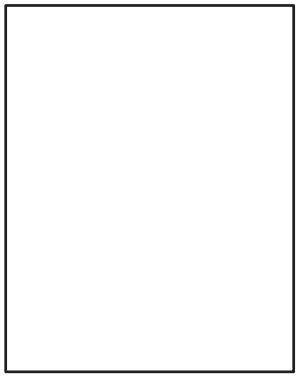
Table 9-6 Black page on page 208	Table 9-5 Banding defects on page 208 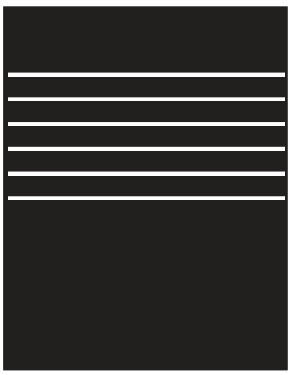	Table 9-13 Streak defects on page 212 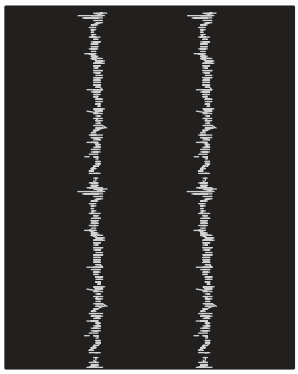

Table 9-4 Image defects table quick reference (continued)

Sample	Description	Possible solutions
Table 9-8 Fixing/fuser defects on page 209	Table 9-10 Image placement defects on page 210	Table 9-12 Output defects on page 211
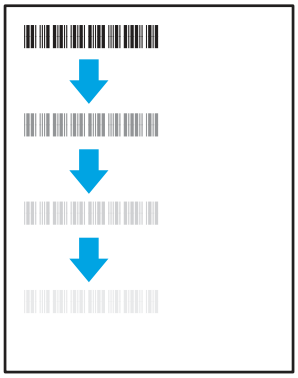		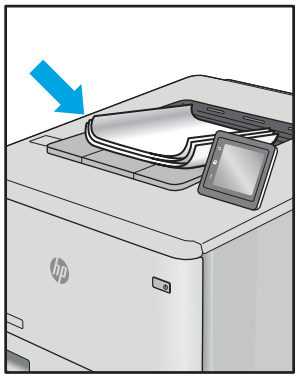

Image defects, no matter the cause, can often be resolved using the same steps. Use the following steps as a starting point for solving image defect issues.

1. Reprint the document. Print quality defects can be intermittent in nature or can go away completely with continued printing.
2. Check the condition of the cartridge or cartridges. If a cartridge is in a **Very Low** state (it has passed the rated life), replace the cartridge.
3. Make sure that the driver and tray print mode settings match the media that is loaded in the tray. Try using a different ream of media or a different tray. Try using a different print mode.
4. Make sure that the printer is within the supported operating temperature/humidity range.
5. Make sure that the paper type, size, and weight are supported by the printer. See support.hp.com for a list of the supported paper sizes and types for the printer.

NOTE: The term “fusing” refers to the part of the printing process where toner is affixed to paper.

The following examples depict letter-size paper that has passed through the printer short edge first.

Table 9-5 Banding defects

Sample	Description	Possible solutions
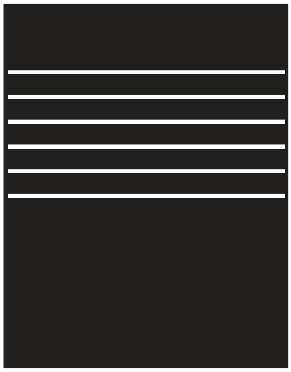	Dark or light lines which repeat down the length of the page, and are wide-pitch and/or impulse bands. They might be sharp or soft in nature. The defect displays only in areas of fill, not in text or sections with no printed content.	1. Reprint the document. 2. Try printing from another tray. 3. Replace the cartridge. 4. Use a different paper type. 5. **Enterprise models only:** From the Home screen on the printer control panel, go to the Adjust Paper Types menu, and then choose a print mode that is designed for a slightly heavier media than what you are using. This slows the print speed and might improve the print quality. 6. If the issue persists, go to support.hp.com.

Table 9-6 Black page

Sample	Description	Possible solutions
	The entire printed page is black.	1. Visually inspect the cartridge to check for damage. 2. Make sure that the cartridge is installed correctly. 3. Replace the cartridge. 4. If the issue persists, go to support.hp.com.

Table 9-7 Blank page – No print

Sample	Description	Possible solutions
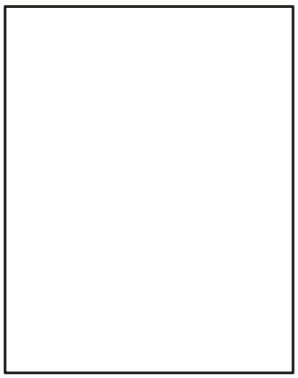	The page is completely blank and contains no printed content.	1. Make sure that the cartridges are genuine HP cartridges. 2. Make sure that the cartridge is installed correctly. 3. Print with a different cartridge. 4. Check the paper type in the paper tray and adjust the printer settings to match. If necessary, select a lighter paper type. 5. If the issue persists, go to support.hp.com.

Table 9-8 Fixing/fuser defects

Sample	Description	Possible solutions
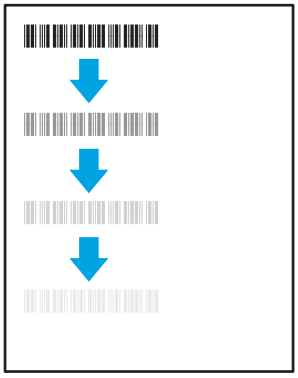	Slight shadows or offsets of the image are repeated down the page. The repeated image might fade with each recurrence.	1. Reprint the document. 2. Check the paper type in the paper tray and adjust the printer settings to match. If necessary, select a lighter weight paper type. 3. If the issue persists, go to support.hp.com.
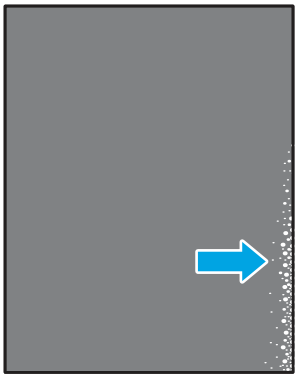	Toner rubs off along either edge of the page. This defect is more common at the edges of high-coverage jobs, and on light media types, but can occur anywhere on the page.	1. Reprint the document. 2. Check the paper type in the paper tray and adjust the printer settings to match. If necessary, select a heavier paper type. 3. **Enterprise models only:** From the printer control panel, go to the Edge-to-Edge menu and then select Normal. Reprint the document. 4. **Enterprise models only:** From the printer control panel, select Auto Include Margins and then reprint the document. 5. If the issue persists, go to support.hp.com.

Table 9-9 Gray background or dark print

Sample	Description	Possible solutions
	The image or text is darker than expected and/or the background is gray.	1. Make sure that the paper in the trays has not already been run through the printer. 2. Use a different paper type. 3. Reprint the document. 4. **Mono models only:** From the Home screen on the printer control panel, go to the Adjust Toner Density menu, and then adjust the toner density to a lower level. 5. Make sure that the printer is within the supported operating temperature and humidity range. 6. Replace the cartridge. 7. If the issue persists, go to support.hp.com.

Table 9-10 Image placement defects

Sample	Description	Possible solutions
	The image is not centered, or is skewed on the page. The defect occurs when the paper is not positioned properly as it is pulled from the tray and moves through the paper path.	1. Reprint the document. 2. Remove the paper and then reload the tray. Make sure that all the paper edges are even on all sides. 3. Make sure that the top of the paper stack is below the tray-full indicator. Do not overfill the tray. 4. Make sure that the paper guides are adjusted to the correct size for the paper. Do not adjust the paper guides tightly against the paper stack. Adjust them to the indentations or markings in the tray. 5. If the issue persists, go to support.hp.com.

Table 9-11 **Light print**

Sample	Description	Possible solutions
	The printed content is light or faded on the entire page.	1. Reprint the document. 2. Remove the cartridge, and then shake it to redistribute the toner. Reinsert the toner cartridges into the printer and close the cover. For a graphical representation of this procedure, see *Replace the toner cartridges*. 3. **Mono models only:** Make sure that the EconoMode setting is disabled, both at the printer control panel and in the print driver. 4. Make sure that the cartridge is installed correctly. 5. Print a Supplies Status Page and check the life and usage of the cartridge. 6. Replace the cartridge. 7. If the issue persists, go to support.hp.com.

Table 9-12 **Output defects**

Sample	Description	Possible solutions
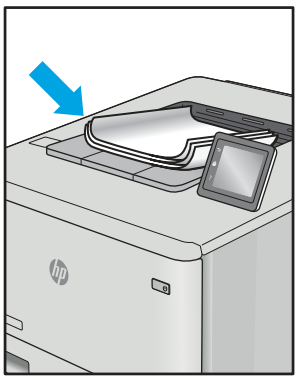	Printed pages have curled edges. The curled edge can be along the short or long side of the paper. Two types of curl are possible: • **Positive curl:** The paper curls toward the printed side. The defect occurs in dry environments or when printing high-coverage pages. • **Negative curl:** The paper curls away from the printed side. The defect occurs in high-humidity environments or when printing low-coverage pages.	1. Reprint the document. 2. **Positive curl:** From the printer control panel, select a heavier paper type. The heavier paper type creates a higher temperature for printing. **Negative curl:** From the printer control panel, select a lighter paper type. The lighter paper type creates a lower temperature for printing. Try storing the paper in a dry environment prior to use, or use freshly opened paper. 3. Print in duplex mode. 4. If the issue persists, go to support.hp.com.

Table 9-12 Output defects (continued)

Sample	Description	Possible solutions
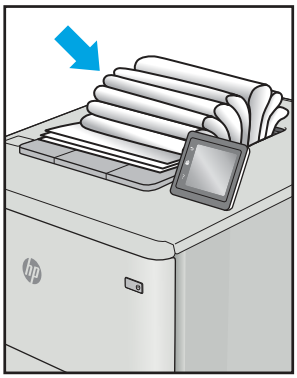	The paper does not stack well in the output tray. The stack might be uneven, skewed, or the pages might be pushed out of the tray and onto the floor. Any of the following conditions can cause this defect: • Extreme paper curl • The paper in the tray is wrinkled or deformed • The paper is a non-standard paper type, such as envelopes • The output tray is too full	1. Reprint the document. 2. Extend the output bin extension. 3. If the defect is caused by extreme paper curl, refer to the troubleshooting steps for "Output curl." 4. Use a different paper type. 5. Use freshly opened paper. 6. Remove the paper from the output tray before the tray gets too full. 7. If the issue persists, go to support.hp.com.

Table 9-13 Streak defects

Sample	Description	Possible solutions
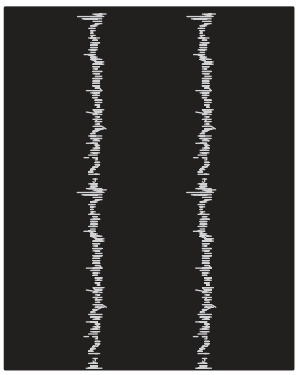	Light vertical streaks that usually span the length of the page. The defect displays only in areas of fill, not in text or sections with no printed content.	1. Reprint the document. 2. Remove the cartridge, and then shake it to redistribute the toner. Reinsert the toner cartridges into the printer and close the cover. For a graphical representation of this procedure, see *Replace the toner cartridges*. 3. If the issue persists, go to support.hp.com. NOTE: Both light and dark vertical streaks can occur when the printing environment is outside the specified range for temperature or humidity. Refer to your printer's environmental specifications for allowable temperature and humidity levels.

Table 9-13 **Streak defects (continued)**

Sample	Description	Possible solutions
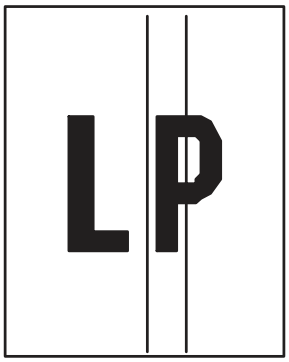	Dark vertical lines which occur down the length of the page. The defect might occur anywhere on the page, in areas of fill or in sections with no printed content.	1. Reprint the document. 2. Remove the cartridge, and then shake it to redistribute the toner. Reinsert the toner cartridges into the printer and close the cover. For a graphical representation of this procedure, see *Replace the toner cartridges*. 3. Print a cleaning page. 4. Check the toner level in the cartridge. 5. If the issue persists, go to support.hp.com.

Improve copy image quality

If the printer is having copy quality problems, try the following solutions in the order presented to resolve the issue.

Try these few simple steps first:

- Use the flatbed scanner rather than the document feeder.
- Use high-quality originals.
- When using the document feeder, load the original document into the feeder correctly, using the paper guides, to avoid unclear or skewed images.

If the problem still exists, try these additional solutions. If they do not fix the problem, see “Improve print quality” for further solutions.

Check the scanner glass for dirt and smudges

Learn about solving copy-quality debris problems.

Over time, specks of debris might collect on the scanner glass and document feeder white plastic backing, which might cause print defects. Use the following procedure to clean the scanner if the printed pages have streaks, unwanted lines, black dots, poor print quality, or unclear text.

1. Press the power button to turn the printer off, and then disconnect the power cable from the electrical outlet.

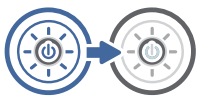

2. Open the scanner lid.

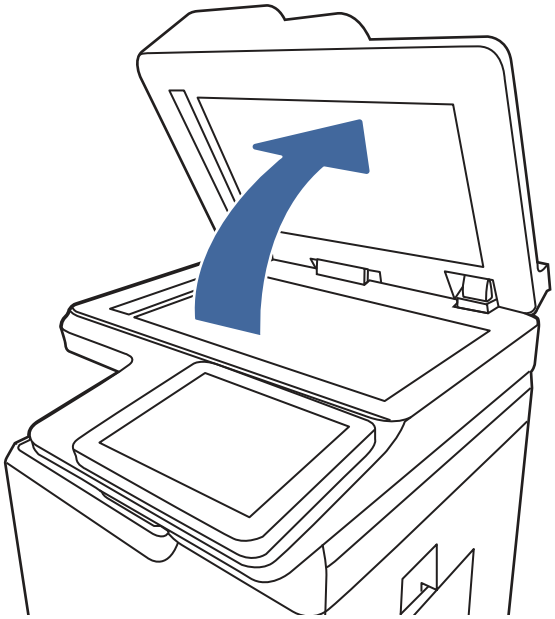

3. Clean the scanner glass (callout 1) and the document feeder strips (callout 2, callout 3) with a soft cloth or sponge that has been moistened with nonabrasive glass cleaner.

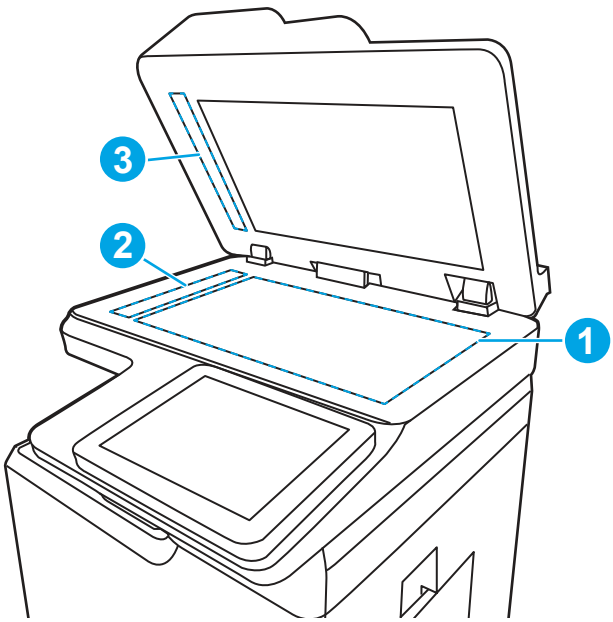

CAUTION: Do not use abrasives, acetone, benzene, ammonia, ethyl alcohol, or carbon tetrachloride on any part of the printer; these can damage the printer. Do not place liquids directly on the glass or platen. They might seep and damage the printer.

NOTE: If you are having trouble with streaks on copies when you are using the document feeder, be sure to clean the small strips of glass on the left side of the scanner (callout 2, callout 3).

4. Dry the glass and white plastic parts with a chamois or a cellulose sponge to prevent spotting.

5. Connect the power cable to an outlet, and then press the power button to turn the printer on.

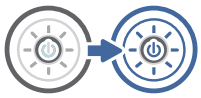

Calibrate the scanner

Calibration is a process that optimizes scan quality.

NOTE: When using the document feeder, make sure to adjust the guides in the input tray so they are against the original document.

1. From the Home screen on the printer control panel, navigate to the Support Tools application, and then select the Support Tools icon.
2. Open the following menus:
   a. Maintenance
   b. Calibration/Cleaning
   c. Calibrate Scanner
3. Touch the Start button to start the calibration process. Follow the on-screen prompts.
4. Wait while the printer calibrates, and then try copying again.

Check the paper settings

Follow these steps if copied pages have smears, fuzzy or dark print, curled paper, or areas where pigment has dropped out.

Check the paper selection options

Use the following steps to check the paper selection options.

1. From the Home screen on the printer control panel, navigate to the Copy application, and then select the Copy icon.
2. Select Options, and then scroll to and select Paper Selection.
3. Select Paper size, and then select one of the predefined options.
4. Select Paper type, and then select one of the predefined options.
5. Select Paper tray, and then select one of the predefined options.
6. Select Done to save the paper selection options.

Check the image-adjustment settings

Adjust the settings in the Copy menu to optimize image quality.

- Sharpness: Clarify or soften the image. For example, increasing the sharpness could make text appear crisper, but decreasing it could make photos appear smoother.
- Darkness: Increase or decrease the amount of white and black used in colors in scanned images.

- Contrast: Increase or decrease the difference between the lightest and the darkest color on the page.
- Background Cleanup: Remove faint colors from the background of scanned images. For example, if the original document is printed on colored paper, use this feature to lighten the background without affecting the darkness of the image.
- Automatic Tone: Available for Flow printers only. The printer automatically adjusts the Darkness, Contrast, and Background Cleanup settings to the most appropriate for the scanned document.

1. From the Home screen on the printer control panel, navigate to the Copy application, and then select the Copy icon.
2. Select Options, and then scroll to and select Image Adjustment.
3. Adjust the sliders to set the levels, and select Done.
4. Select Copy to start the copy job.

NOTE: These settings are temporary. After you have finished the job, the printer returns to the default settings.

Optimize copy quality for text or pictures

Optimize the copy job for the type of image being copied: text, graphics, or photos.

1. From the Home screen on the printer control panel, navigate to the Copy application, and then select the Copy icon.
2. Select Options, and then select Optimize Text/Picture.
3. Select one of the predefined options.
4. Select Copy to start the copy job.

NOTE: These settings are temporary. After you have finished the job, the printer returns to the default settings.

Edge-to-edge copying

Use this feature to avoid shadows that can appear along the edges of copies when the original document is printed close to the edges.

1. From the Home screen on the printer control panel, navigate to the Copy application, and then select the Copy icon.
2. Select Options, and then select Edge-To-Edge.
3. Select the Edge-To-Edge output option if the original document is printed close to the paper edges.
4. Select Copy to start the copy job.

Improve scan image quality

Try the following basic solutions to improve scanned image quality.

- Use the flatbed scanner rather than the document feeder.

- Use high-quality originals.
- When using the document feeder, load the original document into the feeder correctly, using the paper guides, to avoid unclear or skewed images.

If the problem still exists, try these additional solutions. If they do not fix the problem, see “Improve print quality” for further solutions.

Check the scanner glass for dirt and smudges

Learn about solving copy-quality debris problems.

Over time, specks of debris might collect on the scanner glass and document feeder white plastic backing, which might cause print defects. Use the following procedure to clean the scanner if the printed pages have streaks, unwanted lines, black dots, poor print quality, or unclear text.

1. Press the power button to turn the printer off, and then disconnect the power cable from the electrical outlet.

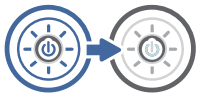

2. Open the scanner lid.

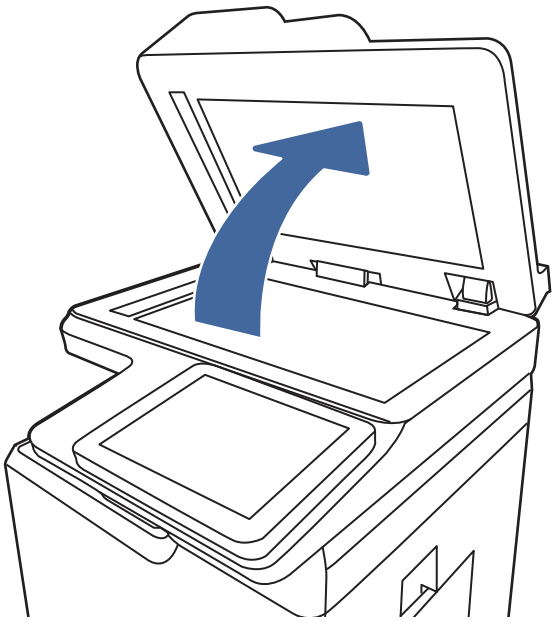

3. Clean the scanner glass (callout 1) and the document feeder strips (callout 2, callout 3) with a soft cloth or sponge that has been moistened with nonabrasive glass cleaner.

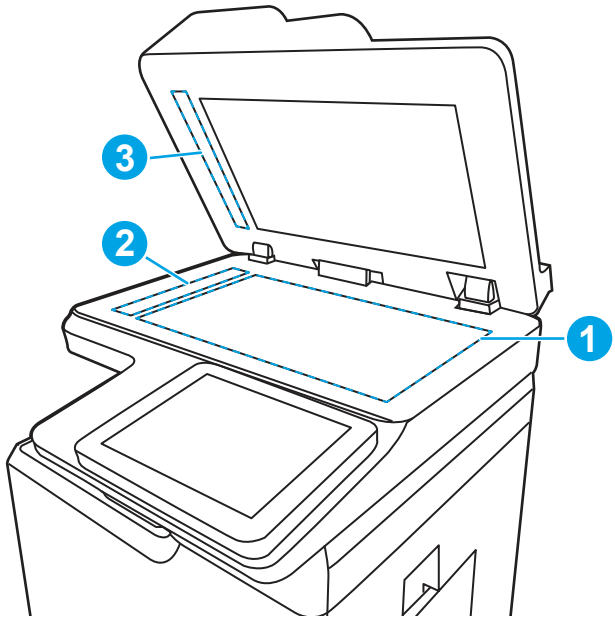

CAUTION: Do not use abrasives, acetone, benzene, ammonia, ethyl alcohol, or carbon tetrachloride on any part of the printer; these can damage the printer. Do not place liquids directly on the glass or platen. They might seep and damage the printer.

NOTE: If you are having trouble with streaks on copies when you are using the document feeder, be sure to clean the small strips of glass on the left side of the scanner (callout 2, callout 3).

4. Dry the glass and white plastic parts with a chamois or a cellulose sponge to prevent spotting.

5. Connect the power cable to an outlet, and then press the power button to turn the printer on.

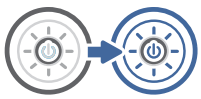

Check the resolution settings

Follow these steps to adjust the resolution setting. Setting the resolution to a high value increases the file size and the scan time.

1. From the Home screen on the printer control panel, navigate to the Scan application, and then select the Scan icon.

2. Select one of the following Scan features:

   - Scan to Email
   - Scan to Network Folder
   - Scan to USB Drive
   - Scan to SharePoint®

3. Select Options, and then select File Type and Resolution.
4. Select one of the predefined Resolution options, and then select Done.
5. Select Send or Save to start the scan.

Check the color settings

Follow these steps to adjust the color setting.

1. From the Home screen on the printer control panel, navigate to the Scan application, and then select the Scan icon.
2. Select one of the following Scan features:
   - Save to Device Memory
   - Scan to Email
   - Scan to Network Folder
   - Scan to USB
   - Scan to SharePoint®
3. Touch the Options button.
4. In the Options pane, scroll to and select Color/Black.
5. Select one of the predefined options.
6. Touch the Send button.

Check the image-adjustment settings

Adjust the settings in the Scan menu to optimize image quality.

- Sharpness: Clarify or soften the image. For example, increasing the sharpness could make text appear crisper, but decreasing it could make photos appear smoother.
- Darkness: Increase or decrease the amount of white and black used in colors in scanned images.
- Contrast: Increase or decrease the difference between the lightest and the darkest color on the page.
- Background Cleanup: Remove faint colors from the background of scanned images. For example, if the original document is printed on colored paper, use this feature to lighten the background without affecting the darkness of the image.
- Automatic Tone: Available for Flow printers only. The printer automatically adjusts the Darkness, Contrast, and Background Cleanup settings to the most appropriate for the scanned document.

1. From the Home screen on the printer control panel, navigate to the Scan application, and then select the Scan icon.
2. Select one of the following Scan features:
   - Scan to Email
   - Scan to Network Folder

- Scan to USB Drive
- Scan to Job Storage
- Scan to SharePoint®

3. Select Options, and then select Image Adjustment.
4. Adjust the sliders to set the levels, and then select Done.
5. Select Send or Save to start the scan.

NOTE: These settings are temporary. After you have finished the job, the printer returns to the default settings.

Optimize scan quality for text or pictures

Optimize the scan job for the type of image being scanned: text, graphics, or photos.

1. From the Home screen on the printer control panel, navigate to the Scan application, and then select the Scan icon.
2. Select one of the following Scan features:
   - Scan to Email
   - Scan to Network Folder
   - Scan to USB Drive
   - Scan to Job Storage
   - Scan to SharePoint®
3. Select Options, and then select Optimize Text/Picture.
4. Select one of the predefined options.
5. Select Send or Save to start the scan.

NOTE: These settings are temporary. After you have finished the job, the printer returns to the default settings.

Check the output-quality settings

This setting adjusts the level of compression when saving the file. For the highest quality, select the highest setting.

1. From the Home screen on the printer control panel, navigate to the Scan application, and then select the Scan icon.
2. Select one of the following Scan features:
   - Scan to Email
   - Scan to Network Folder
   - Scan to USB Drive

- Scan to SharePoint®

3. Select Options, and then select File Type and Resolution.
4. Select one of the predefined Quality and File Size options, and then select Done.
5. Select Send or Save to start the scan.

Improve fax image quality

If the printer is having fax quality problems, try the following solutions in the order presented to resolve the issue.

Try these few simple steps first:

- Use the flatbed scanner rather than the document feeder.
- Use high-quality originals.
- When using the document feeder, load the original document into the feeder correctly, using the paper guides, to avoid unclear or skewed images.

If the problem still exists, try these additional solutions. If they do not fix the problem, see “Improve print quality” for further solutions.

Check the scanner glass for dirt and smudges

Learn about solving copy-quality debris problems.

Over time, specks of debris might collect on the scanner glass and document feeder white plastic backing, which might cause print defects. Use the following procedure to clean the scanner if the printed pages have streaks, unwanted lines, black dots, poor print quality, or unclear text.

1. Press the power button to turn the printer off, and then disconnect the power cable from the electrical outlet.

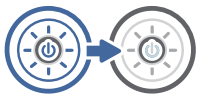

2. Open the scanner lid.

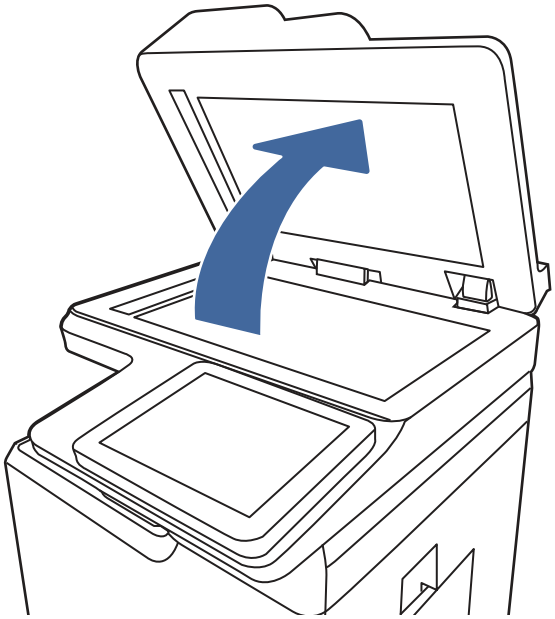

3. Clean the scanner glass (callout 1) and the document feeder strips (callout 2, callout 3) with a soft cloth or sponge that has been moistened with nonabrasive glass cleaner.

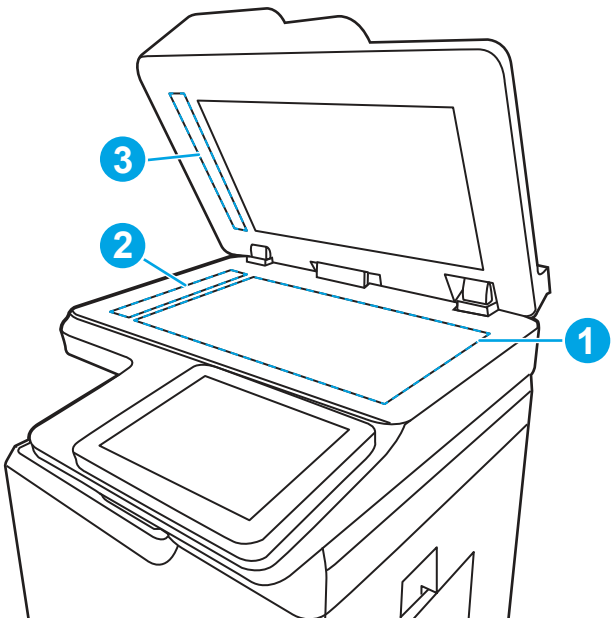

CAUTION: Do not use abrasives, acetone, benzene, ammonia, ethyl alcohol, or carbon tetrachloride on any part of the printer; these can damage the printer. Do not place liquids directly on the glass or platen. They might seep and damage the printer.

NOTE: If you are having trouble with streaks on copies when you are using the document feeder, be sure to clean the small strips of glass on the left side of the scanner (callout 2, callout 3).

4. Dry the glass and white plastic parts with a chamois or a cellulose sponge to prevent spotting.

5. Connect the power cable to an outlet, and then press the power button to turn the printer on.

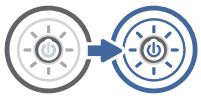

Check the send-fax resolution settings

Adjust the resolution of outgoing faxes as needed. A higher resolution setting increases the fax size and send time.

1. From the Home screen on the printer control panel, navigate to the Fax application, and then select the Fax icon.
2. Select Options.
3. In the Options pane, scroll to and select Resolution.
4. Select one of the predefined options, and then select Send to send the fax.

Check the image-adjustment settings

Adjust the settings in the Fax menu to optimize image quality.

- Sharpness: Clarify or soften the image. For example, increasing the sharpness could make text appear crisper, but decreasing it could make photos appear smoother.
- Darkness: Increase or decrease the amount of white and black used in colors in scanned images.
- Contrast: Increase or decrease the difference between the lightest and the darkest color on the page.
- Background Cleanup: Remove faint colors from the background of scanned images. For example, if the original document is printed on colored paper, use this feature to lighten the background without affecting the darkness of the image.
- Automatic Tone: Available for Flow printers only. The printer automatically adjusts the Darkness, Contrast, and Background Cleanup settings to the most appropriate for the scanned document.

1. From the Home screen on the printer control panel, navigate to the Fax application, and then select the Fax icon.
2. Select Options.
3. In the Options pane, scroll to and select Image Adjustment.
4. Adjust the sliders to set the levels, and then select Done.
5. Select Send to send the fax.

NOTE: These settings are temporary. After you have finished the job, the printer returns to the default settings.

Optimize fax quality for text or pictures

Optimize the fax job for the type of image being scanned: text, graphics, or photos.

1. From the Home screen on the printer control panel, navigate to the Fax application, and then select the Fax icon.
2. Select Options.
3. In the Options pane, scroll to and select Optimize Text/Picture.
4. Select one of the predefined options.
5. Select Send to send the fax.

NOTE: These settings are temporary. After you have finished the job, the printer returns to the default settings.

Check the error-correction setting

Make sure the Error Correction Mode setting is enabled. This setting can improve image quality.

1. From the Home screen on the printer control panel, navigate to the Settings application, and then select the Settings icon.
2. Open the following menus:
   a. Fax
   b. Fax Send Settings
   c. General Fax Send Settings
3. Select the Error Correction Mode option. Touch the Done button.

Check the fit-to-page setting

If the Fit to Page setting is enabled, and the incoming fax is larger than the default page size, the printer attempts to scale the image to fit the page. If this setting is disabled, larger images split across multiple pages.

1. From the Home screen on the printer control panel, navigate to the Settings application, and then select the Settings icon.
2. Open the following menus:
   a. Fax
   b. Fax Receive Settings
   c. Default Job Options
   d. Fit to Page
3. Select the On option to enable the setting, or select the Off option to disable it.

Send to a different fax machine

The problem might be related to fax machine settings or supplies status.

Try sending the fax to a different fax machine. If the fax quality is better, the problem is related to the initial recipient's fax machine settings or supplies status.

Check the sender's fax machine

Try the following to check the sender's fax machine.

Ask the sender to try sending from a different fax machine. If the fax quality is better, the problem is with the sender's fax machine. If a different fax machine is unavailable, ask the sender to consider making the following changes:

- Make sure the original document is on white (not colored) paper.
- Increase the fax resolution, quality level, or contrast settings.
- If possible, send the fax from a computer software program.

Solve wired network problems

Check the following information to resolve wired network issues.

Introduction

Certain types of problems can indicate there is a network communication problem. These problems include the following issues:

Poor physical connection

Check the cable connections.

1. Verify that the printer is attached to the correct network port using a cable of the correct length.
2. Verify that cable connections are secure.
3. Look at the network port connection on the back of the printer, and verify that the amber activity light flashes indicating network traffic, and the green link-status light is continuously lit indicating a network link.
4. If the problem continues, try a different cable or port on the hub.

The computer is unable to communicate with the printer

Verify that the printer is communicating with the network and your computer.

1. Test network communication by pinging the network.
   a. Open a command-line prompt on your computer.
      - For Windows, click **Start**, click **Run**, type `cmd`, and then press `Enter`.
      - For macOS, go to **Applications**, then **Utilities**, and open **Terminal**.
   b. Type `ping` followed by the IP address for your printer.
   c. If the window displays round-trip times, the network is working.
2. If the ping command failed, verify that the network hubs are on, and then verify that the network settings, the printer, and the computer are all configured for the same network (also known as subnet).

3. Open the printer properties and click the **Ports** tab. Verify that the current IP address for the printer is selected. The printer IP address is listed on the printer configuration page.
4. If you installed the printer using the HP standard TCP/IP port, select the box labeled **Always print to this printer, even if its IP address changes**.
5. If you installed the printer using a Microsoft standard TCP/IP port, use the printer's hostname instead of the IP address.
6. If the IP address is correct, delete the printer and then add it again.
7. Reinstall the printer software and driver.

The printer is using incorrect link and duplex settings for the network

HP recommends leaving these settings in automatic mode (the default setting). If you change these settings, you must also change them for your network.

New software programs might be causing compatibility problems

Verify that any new software programs are correctly installed and that they use the correct print driver.

The computer or workstation might be set up incorrectly

An incorrectly configured computer can cause issues with printing.

1. Check the network drivers, print drivers, and the network redirection settings.
2. Verify that the operating system is configured correctly.

The printer is disabled, or other network settings are incorrect

Check the network settings.

1. Review the printer's configuration/networking pages to check the status of the network settings and protocols.
2. Reconfigure the network settings if necessary.

Solve wireless network problems

Check the following information to resolve wireless network issues.

Introduction

Use the troubleshooting information to help resolve issues.

NOTE: To determine whether HP NFC, Wi-Fi, BLE, or other wireless printing capabilities are enabled on the printer, print a configuration page from the printer control panel.

NOTE: If you have been experiencing intermittent loss of network connectivity, first update the printer firmware. For instructions on how to update the printer firmware, go to http://support.hp.com, search for your printer, and then search on "update the firmware."

Wireless connectivity checklist

Use the checklist to help resolve wireless connection issues.

- For printers that do not support simultaneous wired and wireless connections, verify that the network cable is not connected.
- Verify that the printer and the wireless router are turned on and have power. Also make sure that the wireless radio in the printer is turned on. (The wireless network indicator is solid when the printer is connected to a wireless network, and blinking when it is searching for a wireless network.)
- Verify that the service set identifier (SSID) is correct:
  - For a wireless connection to your network, confirm that your mobile device is connecting to the correct router/access point.
  - For a Wi-Fi Direct connection, print a configuration page to determine the printer's SSID.

  If you are not sure that the SSID is correct, run the wireless setup again.
- With secured networks, verify that the security information is correct. If the security information is incorrect, run the wireless setup again.
- If the wireless network is working correctly, try accessing other computers on the wireless network. If the network has Internet access, try connecting to the Internet over a wireless connection.
- Verify that the encryption method (AES or TKIP) is the same for the printer as it is for the wireless access point (on networks using WPA security).
- Verify that the printer is within the range of the wireless network. For most networks, the printer must be within 30 m (100 ft) of the wireless access point (wireless router).
- Verify that obstacles do not block the wireless signal. Remove any large metal objects between the access point and the printer. Make sure poles, walls, or support columns containing metal or concrete do not separate the printer and wireless access point.
- Verify that the printer is located away from electronic devices that might interfere with the wireless signal. Many devices can interfere with the wireless signal including motors, cordless phones, security system cameras, other wireless networks, and some Bluetooth devices.
- For computers connecting to the wireless printer:
  - Verify that the print driver is installed on the computer.
  - Verify that you have selected the correct printer port.
  - Verify that the computer and printer connect to the same wireless network.
  - If your environment has multiple wireless signals and you need the printer to support dual band networks on both 2.4 GHz and 5 GHz, install the HP Jetdirect 2900nw print server accessory.
  - For macOS, verify that the wireless router supports Bonjour.

The printer does not print after the wireless configuration completes

Resolve issues between your computer and the printer.

1. Make sure that the printer is turned on and in the ready state.

2. Turn off any third-party firewalls on your computer.
3. Make sure that the wireless network is working correctly.
4. Make sure that your computer is working correctly. If necessary, restart the computer.
5. Verify that you can open the printer HP Embedded Web Server from a computer on the network.

The printer does not print, and the computer has a third-party firewall installed

Verify that a firewall is not interfering with wireless communication.

1. Update the firewall with the most recent update available from the manufacturer.
2. If programs request firewall access when you install the printer or try to print, make sure that you allow the programs to run.
3. Temporarily turn off the firewall, and then install the wireless printer on the computer. Enable the firewall when you have completed the wireless installation.

The wireless connection does not work after moving the wireless router or printer

Verify that the printer and network settings are correct.

1. Make sure that the router or printer connects to the same network that your computer connects to.
2. Print a configuration page.
3. Compare the service set identifier (SSID) on the configuration page to the SSID in the printer configuration for the computer.
4. If the numbers are not the same, the devices are not connecting to the same network. Reconfigure the wireless setup for the printer.

Cannot connect more computers to the wireless printer

Complete the following steps to solve connection issues.

1. Make sure that the other computers are within the wireless range and that no obstacles block the signal. For most networks, the wireless range is within 30 m (100 ft) of the wireless access point.
2. Make sure that the printer is turned on and in the ready state.
3. Make sure there are not more than 5 concurrent Wireless Print Direct users.
4. Turn off any third-party firewalls on your computer.
5. Make sure that the wireless network is working correctly.
6. Make sure that your computer is working correctly. If necessary, restart the computer.

The wireless printer loses communication when connected to a VPN

Typically, you cannot connect to a VPN and other networks at the same time.

The network does not appear in the wireless networks list

Follow these steps when the network does not appear in the wireless network list on your computer or mobile device.

- Make sure the wireless router is turned on and has power.
- The network might be hidden. However, you can still connect to a hidden network. Make sure the router/access point is advertising the SSID by checking for its SSID in the available networks seen by your mobile device.

The wireless network is not functioning

Complete the following steps to ensure that the network is functioning correctly.

1. For printers that do not support simultaneous wired and wireless connections, make sure that the network cable is disconnected.
2. To verify if the network has lost communication, try connecting other devices to the network.
3. Test network communication by pinging the network.
   a. Open a command-line prompt on your computer.
      - For Windows, click **Start**, click **Run**, type `cmd`, and then press `Enter`.
      - For macOS, go to **Applications**, then **Utilities**, and open **Terminal**.
   b. Type `ping` followed by the router IP address.
   c. If the window displays round-trip times, the network is working.
4. Make sure that the router or printer connects to the same network that the computer connects to.
   a. Print a configuration page.
   b. Compare the service set identifier (SSID) on the configuration report to the SSID in the printer configuration for the computer.
   c. If the numbers are not the same, the devices are not connecting to the same network. Reconfigure the wireless setup for the printer.

Reduce interference on a wireless network

The following tips can reduce interference in a wireless network:

- Keep the wireless devices away from large metal objects, such as filing cabinets, and other electromagnetic devices, such as microwaves and cordless telephones. These objects can disrupt radio signals.
- Keep the wireless devices away from large masonry structures and other building structures. These objects can absorb radio waves and lower signal strength.
- Position the wireless router in a central location in line of sight with the wireless printers on the network.

Solve fax problems

Use the following sections to solve issues involving the printer fax functions.

Checklist for solving fax problems

Use the following checklist to help identify the cause of any fax-related problems you encounter:

- **Are you using the fax cable supplied with the fax accessory?** This fax accessory has been tested with the supplied fax cable to meet RJ11 and functional specifications. Do not substitute another fax cable; the analog-fax accessory requires an analog-fax cable. It also requires an analog phone connection.
- **Is the fax/phone line connector seated in the outlet on the fax accessory?** Make sure that the phone jack is correctly seated in the outlet. Insert the connector into the outlet until it "clicks."

NOTE: Verify that the phone jack is connected to the fax port rather than to the network port. The ports are similar.

- **Is the phone wall jack working properly?** Verify that a dial tone exists by attaching a phone to the wall jack. Can you hear a dial tone, and can you make or receive a phone call?

What type of phone line are you using?

Verify the type of phone line you are using, and review the recommendations for that type of line.

- **Dedicated line:** A standard analog fax/phone line assigned to receive or send faxes.

NOTE: The phone line should be for printer fax use only and not shared with other types of telephone devices. Examples include alarm systems that use the phone line for notifications to a monitoring company.

- **PBX system:** A business-environment phone system. Standard home phones and the fax accessory use an analog phone signal. Some PBX systems are digital and might not be compatible with the fax accessory. You might need an interfacing Analog Telephone Adapter (ATA) to connect the fax machine to digital PBX systems.
- **Roll-over lines:** A phone system feature where a new call "rolls over" to the next available line when the first incoming line is busy. Try attaching the printer to the first incoming phone line. The fax accessory answers the phone after it rings the number of times set in the rings-to-answer setting.

Are you using a surge-protection device?

A surge-protection device can be used between the wall jack and the fax accessory to protect the fax accessory against electrical power passed through the phone lines. These devices can cause some fax communication problems by degrading the quality of the phone signal.

If you are having problems sending or receiving faxes and are using one of these devices, connect the printer directly to the phone jack on the wall to determine whether the problem is with the surge-protection device.

Are you using a phone company voice-messaging service or an answering machine?

If the rings-to-answer setting for the messaging service is lower than the rings-to-answer setting for the fax accessory, the messaging service answers the call, and the fax accessory cannot receive faxes.

If the rings-to-answer setting for the fax accessory is lower than that of the messaging service, the fax accessory answers all calls.

Does your phone line have a call-waiting feature?

If the fax telephone line has an activated call-waiting feature, a call-waiting notice can interrupt a fax call in progress, which causes a communication error.

Ensure that a call-waiting feature is not active on the fax telephone line.

Check fax accessory status

If the analog-fax accessory does not appear to be functioning, print a Configuration Page report to check the status.

1. From the Home screen, scroll to and select Reports.
2. Open the following menus:
   a. Configuration/Status Pages
   b. Configuration Page
3. Touch the Print button to print the report, or touch the View button to view the report on the screen. The report consists of several pages.

NOTE: The printer IP address or host name is listed on the Jetdirect Page.

4. On the Fax Accessory Page of the Configuration Page, under the Hardware Information heading, check the Modem Status. The following table identifies the status conditions and possible solutions.

NOTE: If the Fax Accessory Page does not print, there might be a problem with the analog fax accessory. If you are using LAN fax or Internet fax, those configurations could be disabling the feature.

Table 9-14 **Analog-fax accessory troubleshooting**

Status conditions	Possible solutions
Operational / Enabled[1]	The analog-fax accessory is installed and ready.
Operational / Disabled[1]	The fax accessory is installed, but you have not configured the required fax settings yet. The fax accessory is installed and operational; however, the HP Digital Sending utility has either disabled the printer fax feature or has enabled LAN fax. When LAN fax is enabled, the analog-fax feature is disabled. Only one fax feature, either LAN fax or analog fax, can be enabled at a time. NOTE: If LAN fax is enabled, the Scan to Fax feature is unavailable on the printer control panel.
Non-Operational / Enabled/Disabled[1]	The printer has detected a firmware failure. Upgrade the firmware.
Damaged / Enabled/Disabled[1]	The fax accessory has failed. Reseat the fax accessory card and check for bent pins. If the status is still DAMAGED, replace the analog-fax accessory card.

1 ENABLED indicates that the analog-fax accessory is enabled and turned on; DISABLED indicates that LAN fax is enabled (analog fax is turned off).

General fax problems

Learn about solutions for common fax problems.

The fax failed to send

Verify the fax issue, and try the suggested solution.

JBIG is enabled, and the receiving fax machine does not have JBIG capability.

Turn off the JBIG setting.

No fax address book button displays

Verify the fax issue, and try the suggested solution.

None of the contacts in the selected contacts list have fax information associated with them. Add the necessary fax information.

Not able to locate the Fax settings in HP Web Jetadmin

Verify the fax issue, and try the suggested solution.

Fax settings in HP Web Jetadmin are located under the device's status page drop-down menu.

Select **Digital Sending and Fax** from the drop-down menu.

The header is appended to the top of the page when the overlay option is enabled

This fax issue is a normal part of operation.

For all forwarded faxes, the printer appends the overlay header to the top of a page.

This is normal operation.

A mix of names and numbers is in the recipients box

This fax issue is a normal part of operation.

Names and numbers can both display, depending on where they are from. The fax address book lists names, and all other databases list numbers.

This is normal operation.

A one-page fax prints as two pages

Verify the fax issue, and try the suggested solution.

The fax header is being appended to the top of the fax, pushing text to a second page.

To print a one page fax on a single page, set the overlay header to overlay mode, or adjust the fit-to-page setting.

A document stops in the document feeder in the middle of faxing

Verify the fax issue, and try the suggested solution.

A jam is in the document feeder.

Clear the jam, and send the fax again.

The volume for sounds coming from the fax accessory is too high or too low

Verify the fax issue, and try the suggested solution.

The volume setting needs to be adjusted.

Adjust the volume in the Fax Send Settings menu and the Fax Receive Settings menu.

Index

Symbols/Numerics

2,000-sheet high-capacity input tray
  clear jams 150
  loading 26
  paper orientation 26
3-bin stapler/stacker
  clear staple jams 150
550-sheet paper trays
  part numbers 34
550-sheet trays
  jams 150

A

accessories
  ordering 34
  overview 34
  part numbers 34
acoustic specifications 17
AirPrint 58, 60
alternative letterhead mode 18, 22, 25, 26
Android devices
  printing from 58, 60

B

bin, output
  locating 2
Bonjour
  identifying 122
browser requirements
  HP Embedded Web Server 122

C

calibrate
  scanner 213
cartridge
  replacing 42
cartridge policy 37
cartridge protection 37, 39
cartridges
  order numbers 42
checklist
  wireless connectivity 226, 227
cleaning
  glass 213, 216, 221
  paper path 200
control panel
  help 140
  locating 2
  locating features 5
copy
  optimize for text or pictures 213
copy settings
  HP Embedded Web Server 122, 124, 126
copying
  overview 63
customer support
  online 140

D

default gateway, setting 133, 134
deleting
  stored jobs 55, 57
digital send settings
  HP Embedded Web Server 122, 124, 127
digital sending
  folders 105
  sending documents 102
  USB 109
dimensions, printer 14
document feeder
  jams 150
  paper-feeding problems 143, 149
double-sided printing
  Mac 52
  Windows 49
duplex printing
  Mac 52
duplex printing (double-sided)
  settings (Windows) 49
  Windows 49
duplexing
  manually (Mac) 52
  manually (Windows) 49

E

easy-access USB printing 61
EconoMode setting 200
edge-to-edge copying 213
electrical specifications 17
Embedded Web Server
  changing network settings 132
  changing printer name 133
  opening 132
Embedded Web Server (EWS)
  assigning passwords 135, 136
  features 122
  network connection 122
energy use, optimizing 137
envelopes
  loading 27
  orientation 18, 20, 27
Ethernet (RJ-45)
  locating 4
Explorer, versions supported
  HP Embedded Web Server 122

F

fax
  block 120
  feeding problems 229, 231
  optimize for text or pictures 221
  overview 113
  required settings 113
  settings 114, 120
  setup 113
fax port
  locating 4
fax settings
  HP Embedded Web Server 122, 124, 128
  required 113
feeding problems 229, 231
folders
  sending to 105
formatter
  locating 3
fuser
  jams 150

G

gateway, setting default 133, 134

general configuration
HP Embedded Web Server 122, 124, 125
genuine HP cartridges 37
glass, cleaning 213, 216, 221

H

hard disks
encrypted 135, 137
hard drive
part number 34
Help button
locating 5
help, control panel 140
Hi-Speed USB 2.0 printing port
locating 4
Home button
locating 5
HP Customer Care 140
HP Embedded Web Server
changing network settings 132
changing printer name 133
copy settings 122, 124, 126
digital send settings 122, 124, 127
fax settings 122, 124, 128
general configuration 122, 124, 125
HP Web Services 122, 124, 130
information pages 122, 124
network settings 122, 124, 131
opening 132
other links list 122, 124, 126
print settings 122, 124, 126
scan settings 122, 124, 127
security settings 122, 124, 129
supplies 129
troubleshooting tools 122, 124, 129
HP Embedded Web Server (EWS)
features 122
network connection 122
HP ePrint 58
HP ePrint software 58
HP JetAdvantage business solutions 111
HP Web Jetadmin 139
HP Web Services
enabling 122, 124, 130

I

image quality
check toner cartridge status 200
check toner-cartridge status 202
information pages
HP Embedded Web Server 122, 124
interface ports
locating 4
Internet Explorer, versions supported
HP Embedded Web Server 122
IP Security 135, 137
IPsec 135, 137
IPv4 address 133
IPv6 address 134

J

jams
2,000-sheet high-capacity input tray 150
550-sheet trays 150
auto-navigation 150, 151
causes of 150, 152
document feeder 150
fuser 150
locations 150
lower-right door 150
output bin 150
right door 150
stapler/stacker accessory 150
staples in the 3-bin stapler/stacker 150
Tray 1 150
Tray 2 150
Jetadmin, HP Web 139
JetAdvantage 111
jobs, stored
creating (Windows) 55
deleting 55, 57
Mac settings 55
printing 55, 57

L

label, orientation 29
labels
printing (Windows) 49
printing on 29
labels, loading 29
LAN port
locating 4
loading
paper in the 2,000-sheet high-capacity input tray 26
paper in Tray 1 18
paper in Tray 2 and the 550-sheet trays 22
local area network (LAN)
locating 4
lock
formatter 135, 137
lower-right door
clear jams 150

M

Mac driver settings
Job Storage 55
managing network 132
managing the printer
overview 122
manual duplex
Mac 52
Windows 49
margins, small
copying 213
memory
included 8
memory chip (toner)
locating 42
mobile printing
Android devices 58, 60
mobile printing, software supported 13
multiple pages per sheet
printing (Mac) 52
printing (Windows) 49

N

Near Field Communication
printing 58
Netscape Navigator, versions supported
HP Embedded Web Server 122
network
printer name, changing 133
settings, changing 132
settings, viewing 132
network duplex settings, changing 134
Network Folder, scan to 105
network link speed settings, changing 134

network settings
HP Embedded Web
Server 122, 124, 131
networks
default gateway 133, 134
HP Web Jetadmin 139
IPv4 address 133
IPv6 address 134
subnet mask 133, 134
supported 8
NFC accessory
part number 34
NFC connect and print 58

O

on/off button
locating 2
online help, control panel 140
online support 140
operating systems, supported 12
optimize copy images 213
optimize fax images 221
optimize scanned images 216
ordering
supplies and accessories 34
other links list
HP Embedded Web
Server 122, 124, 126
output bin
clear jams 150
locating 2

P

pages per minute 8
pages per sheet
selecting (Mac) 52
selecting (Windows) 49
paper
2,000-sheet high-capacity input
tray orientation 26
jams 150, 152
loading the 2,000-sheet high-
capacity input tray 26
loading Tray 1 18
loading Tray 2 and the 550-
sheet trays 22
selecting 200, 203
Tray 1 orientation 18, 20
Tray 2 and the 550-sheet trays
orientation 22, 24
paper jams
2,000-sheet high-capacity input
tray 150
550-sheet trays 150
document feeder 150
fuser 150
locations 150
lower-right door 150
output bin 150
right door 150
stapler/stacker accessory 150
Tray 1 150
Tray 2 150
paper pickup problems
solving 143, 146
paper trays
overview 18
part numbers 34
paper type
selecting (Windows) 49
paper types
selecting (Mac) 52
paper, ordering 34
part numbers
accessories 34
replacement parts 36
supplies 36
toner cartridges 36
parts
overview 34
ports
locating 4
power
consumption 17
power connection
locating 3
power switch
locating 2
power usage 137
print media
loading in Tray 1 18
print on both sides
Mac 52
manually, Windows 49
Windows 49
print settings
HP Embedded Web
Server 122, 124, 126
printer
overview 1
printing
from USB storage
accessories 61
overview 49
stored jobs 55, 57
printing on both sides
settings (Windows) 49
private printing 55
product number
location 3
protect cartridges 37, 39

R

replacement parts
part numbers 36
replacing
staples 46
toner cartridges 42
required settings
fax 113
reset factory settings 141
right door
jams 150
RJ-45 port
locating 4

S

scan settings
HP Embedded Web
Server 122, 124, 127
Scan to Network Folder 105
initial setup 83
Scan to USB Drive 109
enabling 98
scanner
calibrate 213
glass cleaning 213, 216, 221
scanning
optimize for text or
pictures 216
overview 68
scanning to email
sending documents 102
scanning to folder 105
scanning to USB 109
security
encrypted hard disk 135, 137
security settings
HP Embedded Web
Server 122, 124, 129
sending to email
sending documents 102
serial number
locating 3
settings
fax 114, 120
reset to factory (default)
settings 141
Sign In button
locating 5
Sign Out button
locating 5

sleep delay
setting 137
small margins 213
special paper
printing (Windows) 49
specifications
electrical and acoustic 17
speed, optimizing 137
stacking
configure the operation mode 30, 31
stand
part number 34
staple jams
3-bin stapler/stacker 150
stapler
setting default staple location 30
stapler/stacker accessory
clear jams 150
configure the operation mode 30, 31
staples
replacing 46
stapling
configure the operation mode 30, 31
setting default location 30
status, fax accessory page 229
storage, job
Mac settings 55
store print jobs 55
stored jobs
creating (Mac) 55
creating (Windows) 55
deleting 55, 57
printing 55, 57
storing jobs
with Windows 55
subnet mask 133, 134
supplies
HP Embedded Web Server 129
low threshold settings 142
ordering 34
overview 34
part numbers 36
replacing staples 46
replacing toner cartridges 42
using when low 142
support
online 140
supported operating systems 12
system requirements
HP Embedded Web Server 122

T

TCP/IP
manually configuring IPv4 parameters 133
manually configuring IPv6 parameters 134
technical support
online 140
toner cartridge
low threshold settings 142
using when low 142
toner cartridges
components 42
order numbers 42
part numbers 36
replacing 42
toner-collection unit
locating 3
touchscreen
locating features 5
transparencies
printing (Windows) 49
Tray 1
jams 150
loading envelopes 27
paper orientation 18, 20
Tray 2
jams 150
Tray 2 and the 550-sheet trays
loading 22
paper orientation 22, 24
trays
capacity 8
included 8
locating 2
use alternative letterhead mode 22, 25
troubleshooting
check toner cartridge status 200
check toner-cartridge status 202
jams 150, 152
network problems 225
overview 140
paper feed problems 143
wired network 225
wireless network 226
troubleshooting tools
HP Embedded Web Server 122, 124, 129
two-sided printing
settings (Windows) 49

U

USB
sending to 109
USB port
enabling 61
locating 4
USB ports, optional
part number 34
USB storage accessories
printing from 61

W

web browser requirements
HP Embedded Web Server 122
websites
customer support 140
HP Web Jetadmin, downloading 139
weight, printer 14
Wi-Fi Direct Print 13, 58
wireless network
troubleshooting 226
wireless network
interference 226, 229
wireless print server
part number 34