User Guide

HP LaserJet Tank 1020, 150x, 250x series

HP company notices

Copyright and License

THE INFORMATION CONTAINED HEREIN IS SUBJECT TO CHANGE WITHOUT NOTICE.

ALL RIGHTS RESERVED. REPRODUCTION, ADAPTATION, OR TRANSLATION OF THIS MATERIAL IS PROHIBITED WITHOUT PRIOR WRITTEN PERMISSION OF HP, EXCEPT AS ALLOWED UNDER THE COPYRIGHT LAWS. THE ONLY WARRANTIES FOR HP PRODUCTS AND SERVICES ARE SET FORTH IN THE EXPRESS WARRANTY STATEMENTS ACCOMPANYING SUCH PRODUCTS AND SERVICES. NOTHING HEREIN SHOULD BE CONSTRUED AS CONSTITUTING AN ADDITIONAL WARRANTY. HP SHALL NOT BE LIABLE FOR TECHNICAL OR EDITORIAL ERRORS OR OMISSIONS CONTAINED HEREIN.

© Copyright 2022 HP Development Company, L.P.

Trademark Credits

Microsoft and Windows are either registered trademarks or trademarks of Microsoft Corporation in the United States and/or other countries.

Mac, OS X, macOS, and AirPrint are trademarks of Apple Inc., registered in the U.S. and other countries.

ENERGY STAR and the ENERGY STAR mark are registered trademarks owned by the U.S. Environmental Protection Agency.

Android and Chromebook are trademarks of Google LLC.

iOS is a trademark or registered trademark of Cisco in the U.S. and other countries and is used under license.

Safety information

Always follow basic safety precautions when using this product to reduce risk of injury from fire or electric shock.

- Read and understand all instructions in the documentation that comes with the printer.

- Observe all warnings and instructions marked on the product.

- Unplug this product from wall outlets before cleaning.

- Do not install or use this product near water, or when you are wet.

- Install the product securely on a stable surface.

- Install the product in a protected location where no one can step on or trip over the line cord, and the line cord cannot be damaged.

- If the product does not operate normally, see **Solve a problem** in this guide.

- There are no user-serviceable parts inside. Refer servicing to qualified service personnel.

Table of contents

1 Get started 1
Printer parts and locations 1
Printer parts rear 1
Control panel features (w/n/dw) 2
Use the HP Smart app to print, scan, and manage 4
2 Connect your printer 5
Connect your printer to a Wi-Fi network using HP Smart 5
Connect your printer to a Wi-Fi network using Wi-Fi Protected Setup (WPS) 5
Connect your printer to an Ethernet network 6
Connect your printer using a USB cable 6
Change wireless settings 7
Change the connection type 8
3 Load media 9
Load paper 9
Load envelopes 11
Load labels 12
4 Print 14
Print from a Windows computer 14
Print from a Mac computer 14
Print with mobile devices 15
5 Configure your printer 16
Use Web Services 16
Update the printer 17
Configure the printer using EWS 17
6 Manage toner, media, and parts 21
Check and refill the toner 21
Replace the imaging drum 26
Order supplies, accessories, and parts 26
7 Solve problems 28
HP support 28
Interpret control-panel light patterns 29
Interpreting Error Codes 30

Print reports ... 34
Restore original factory defaults and settings ... 35
Printer does not pick up paper or misfeeds ... 35
Clear paper jams ... 38
Improve print quality ... 44
Resolving print quality problems ... 46
Solve wireless network problems ... 51
Solve Ethernet connection problems ... 54
Appendix A Printer specifications ... 55
Technical specifications ... 55
System requirements ... 55
Printer dimensions ... 55
Power consumption, electrical specifications, and acoustic emissions ... 56
Operating-environment range ... 56
Warning icons ... 56
Laser Warning ... 57
Appendix B Service and support ... 58
HP limited warranty statement ... 58
HP's Premium Protection Warranty: HP LaserJet Tank Toner Reload Kit and HP Laser Imaging Drum limited warranty statement ... 69
HP policy on non-HP supplies ... 70
Reminder on the use of non-Original HP supplies ... 70
HP anticounterfeit Web site ... 70
End User License Agreement ... 70
Customer self-repair warranty service ... 75
Customer support ... 75
Appendix C Environmental product stewardship program ... 77
Protecting the environment ... 77
Ozone production ... 77
Power consumption ... 77
Toner consumption ... 77
Paper use ... 78
Plastics ... 78
HP LaserJet print supplies ... 78
Paper ... 78
Material restrictions ... 78
Disposal of waste equipment by users (EU and India) ... 78

Electronic hardware recycling 79
Hardware recycling information (Brazil) 79
Chemical substances 79
Product Power Data per European Union Commission Regulation 1275/2008 79
SEPA Ecolabel User Information (China) 79
Restriction on Hazardous Substances statement (India) 80
WEEE (Turkey) 80
The Table of Hazardous Substances/Elements and their Content (China) 81
Material Safety Data Sheet (MSDS) 81
EPEAT 82
Declaration of the Presence Condition of the Restricted Substances Marking (Taiwan) 82
For more information 83
Appendix D Regulatory information 84
Regulatory statements 84
Wireless statements 88

1 Get started

This section describes the printer parts, control panel features, and other printer functionalities.

Printer parts and locations

Part names and their locations on the front and top of the printer.

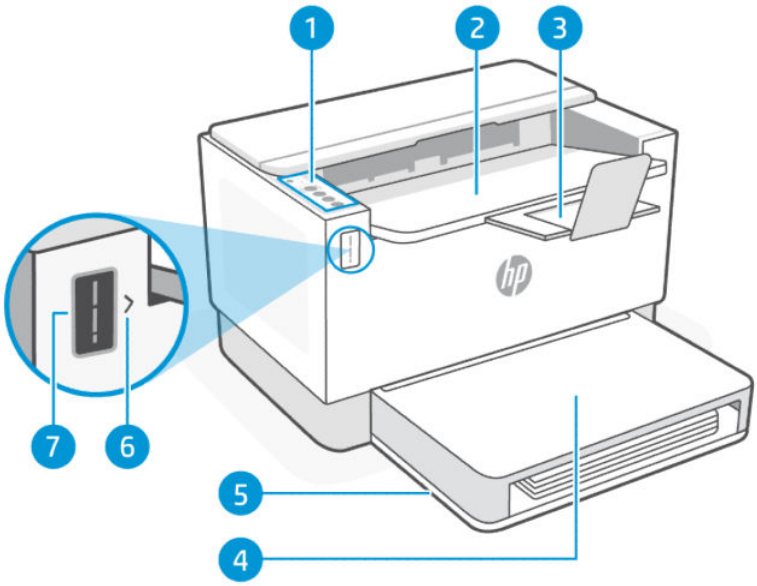

Table 1-1 Printer front view

Feature	Description
1	Control panel
2	Output tray/Toner access door
3	Output tray extender
4	Tray cover
5	Paper tray
6	Refill toner indicator
7	Toner gauge

Printer parts rear

Part names and their locations on the back of the printer.

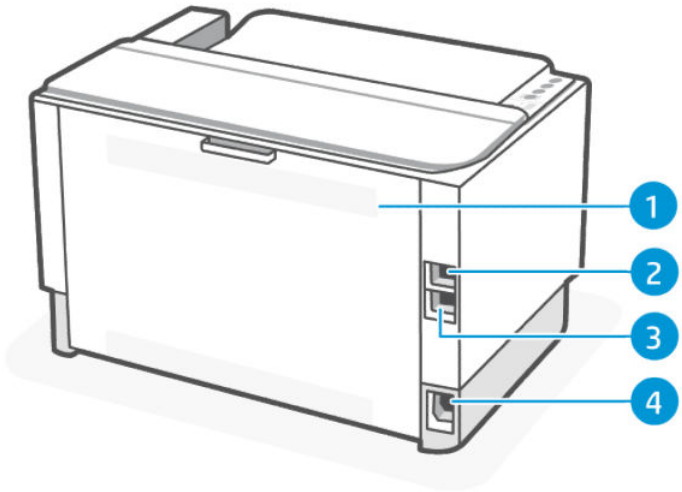

Table 1-2 Printer back view

Feature	Description
1	Rear access door
2	USB port
3	Ethernet port (some models only)
4	Power input

Control panel features (w/n/dw)

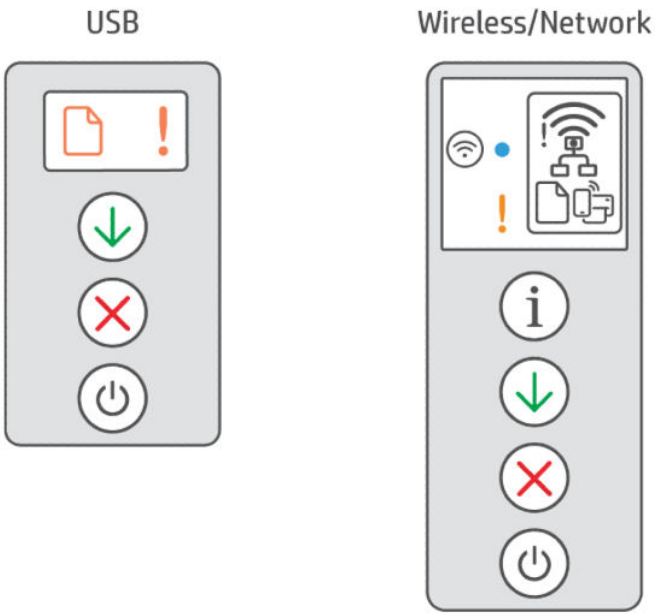

Table 1-3 Control panel features

Buttons/Lights	Description
Paper light/icon	Blinks when the input tray is out of paper or when there is a paper error.
Wi-Fi Direct icon	Indicates that Wi-Fi Direct is on. You can connect any device that supports Wi-fi (for example: smart phones, tablets, or computers) directly to the printer without using a wireless router.
Wireless icon (Wireless model)	This indicates that there is a stable wireless connection. If an exclamation icon appears beside the wireless icon, see Wireless status of the printer.
Ethernet icon	This indicates that the printer is connected through a wired (Ethernet) connection.
Attention light/icon	A light that is on or blinks when the printer requires attention.
Wireless button (Wireless model)	A button to turn on or off the Wi-Fi connection to the printer.
Wireless light (Wireless model)	A small LED light to display the status of the Wi-Fi connection. This light blinks when connecting to Wi-Fi and lit steadily when connected.
Information button/light (Wireless model)	A button to print a summary of printer settings and status. This button lights up or blinks when a printer error occurs.
Resume button/light	A button to acknowledge and resume printing. If the light is on, the printer needs attention.
Cancel button/light	A button to cancel a job.
Power button/light	A button to turn the printer on or off.

Use the HP Smart app to print, scan, and manage

The HP Smart app can help you perform many different printer tasks, including the following:

- Set up and connect your printer.
- Print and scan documents and photos.
- Share documents through email and other applications.
- Manage printer settings, check printer status, print reports, and order supplies.

HP Smart is supported on mobile devices and computers running on Android OS 7.0 or later, iOS 12.0 or later, iPadOS, Windows 10 and above, and macOS 10.14 and later.

NOTE: At this time, the HP Smart app might not be available in all languages. Some features are available only on specific printers or models. HP Smart does not support all file formats. For more information, see Get more information about HP Smart.

To install HP Smart and open the app

1. Visit 123.hp.com to download and install HP Smart on your device.

   NOTE:

   - **iOS, Android, Windows 10 and above, and macOS:** You can also download HP Smart from the respective app stores for the device.
   - **Windows 7:** You can download the HP Easy Start from 123.hp.com, install the software, and connect the printer wirelessly using the software.

     NOTE: Windows 7 Service Pack1 (SP1) is required to install the HP Smart app.

2. Open HP Smart after installation.
   - **iOS/Android:** From the mobile device desktop or app menu, tap HP Smart.
   - **Windows 10 and above:** From the computer desktop, click **Start**, and then select **HP Smart** from the app list.
   - **macOS:** From the Launchpad, select HP Smart.
3. Connect your printer wirelessly using HP Smart. See Get more information about HP Smart.
4. If prompted, create an HP account and register the printer.

Get more information about HP Smart

To learn how to connect, print, and scan using HP Smart, visit the website for your device:

- **iOS/iPadOS/Android**: www.hp.com/go/hpsmart-help
- **Windows 10 and above**: www.hp.com/go/hpsmartwin-help
- **macOS**: www.hp.com/go/hpsmartmac-help

2 Connect your printer

This section describes different ways to connect your printer.

Connect your printer to a Wi-Fi network using HP Smart

Install the HP Smart app on your computer or mobile device and use the app to set up or connect the printer to your Wi-Fi network.

NOTE: This section is applicable to wireless printers only.

For information about HP Smart including where to download the app, see Use the HP Smart app to print, scan, and manage.

1. Make sure your computer or mobile device is connected to your Wi-Fi network. On your mobile device, turn on Bluetooth and location services.

   NOTE: HP Smart uses Bluetooth for printer setup. It does not support Print using Bluetooth.

2. If your printer Wi-Fi was previously turned off, make sure to turn it on. For more information about wireless status, see Wireless status of the printer.

3. If the printer is no longer in wireless setup mode, restore the printer network settings. See Restore network settings to default.

4. Open the HP Smart app on your computer or mobile device. See Use the HP Smart app to print, scan, and manage.

5. From HP Smart, click or tap the Plus icon ⊕ or **Add Printer**, and then choose the option to select or add a printer. If prompted, allow Bluetooth and location permissions.

   Follow the instructions to add the printer to your network.

6. When prompted, create an HP account and register the printer.

NOTE: When the printer is connected successfully, the Wireless light stops blinking and remains lit (for all Wireless models). See Wireless status of the printer.

Connect your printer to a Wi-Fi network using Wi-Fi Protected Setup (WPS)

This topic describes how to connect your printer to a Wi-Fi network using WPS.

This wireless setup method can be used if your router has a WPS button. If the router does not have this button, it is recommended that you connect the printer using the HP Smart app. See Get more information about HP Smart.

1. Make sure your router and printer are not too far from each other.

2. From the printer control panel, press and hold the Wireless button for at least 5 seconds to start WPS. The Wireless light/icon blinks.

3. Press the WPS button on your router.

NOTE:

- Be sure to press the WPS button on the router within 2 minutes.
- When the printer is connected successfully, the Wireless light/icon stops blinking and remains lit (for all Wireless models).

4. Open the HP Smart app on your computer or mobile device. See Use the HP Smart app to print, scan, and manage.

5. From HP Smart, click or tap the Plus icon or **Add Printer**, and then choose the option to select or add a printer.

   Follow the instructions to add the printer to your network.

6. When prompted, create an HP account and register the printer.

Connect your printer to an Ethernet network

This topic describes how to connect your printer to an Ethernet network.

If your Ethernet network does not have an Internet connection, connect the printer wirelessly to the HP Smart app. See Get more information about HP Smart.

1. Make sure your computer is connected to the router.

2. Connect your printer and router using an Ethernet cable (Ethernet cable sold separately).

NOTE:

- The Wi-Fi connection is automatically disabled when you connect the Ethernet cable.
- To connect the printer wirelessly, disconnect the Ethernet cable and connect the printer to your wireless network using HP Smart. See Get more information about HP Smart.

3. Open the HP Smart app on your computer or mobile device. See Use the HP Smart app to print, scan, and manage.

4. From HP Smart, click or tap the Plus icon or **Add Printer**, and then choose the option to select or add a printer.

   Follow the instructions to add the printer to your network.

5. When prompted, create an HP account and register the printer.

Connect your printer using a USB cable

This topic describes how to connect your printer using a USB cable.

1. Connect the printer and computer using a USB cable.

2. Open the HP Smart app on your computer. See Use the HP Smart app to print, scan, and manage.

3. From HP Smart, click or tap the Plus icon ⊕ or **Add Printer**, and then choose the option to select or add a printer.

   Follow the instructions to add the printer.

4. When prompted, create an HP account and register the printer.

Change wireless settings

You can set up and manage the wireless connection for your printer. This includes printing information about network settings, turning the wireless function on or off, and restoring wireless settings.

Wireless status of the printer

Table 2-1 Wireless status of the printer

Wireless icon	Wireless light	Wi-Fi Status
Off	No light on the control panel	The printer is not connected to the network. To turn on wireless, press the Wireless button . To connect the printer to a Wi-Fi network, see Get more information about HP Smart or Connect your printer to a Wi-Fi network using Wi-Fi Protected Setup (WPS).
On	Solid blue light is lit on the control panel.	The printer is connected to the wireless network.
Blinks quickly	The blue light blinks in sync with the wireless icon.	The printer is trying to connect to a wireless network.
On	The blue light blinks in sync with the wireless icon along with the exclamation icon.	The printer is unable to connect to a wireless network. If the printer is unable to connect to a wireless network, the Wireless icon blinks. Press the Cancel button to continue and then try connecting the printer to the wireless network again. See Connect your printer to a Wi-Fi network using HP Smart. If problem persists, try connecting using the HP Smart app. See Connect your printer to a Wi-Fi network using Wi-Fi Protected Setup (WPS).

Restore network settings to default

1. Press and hold the Information button ⓘ for 5 seconds, and then release the button. All control panel buttons light up.

2. Press and hold the Wireless button and the Cancel button . The printer restarts and the Wireless light starts blinking. This indicates that the printer is in wireless setup mode. You can now set up a wireless connection between the printer and your device.

NOTE: Use the HP Smart app to connect the printer wirelessly.

Change the connection type

This topic describes how to change the way to connect your printer.

USB to a wireless connection

Perform the following steps to convert your HP printer from a USB to a wireless connection in Windows/macOS.

Windows 10/macOS

1. Unplug the USB cable from the printer.
2. Make sure your computer or mobile device is connected to your Wi-Fi network. On your mobile device, turn on Bluetooth and location services.
3. If your printer Wi-Fi was previously turned off, make sure to turn it on. For more information about wireless status, see Wireless status of the printer.
4. If the printer is no longer in wireless setup mode, restore the printer network settings. See Restore network settings to default.
5. Open the HP Smart app on your computer or mobile device. See Use the HP Smart app to print, scan, and manage.
6. When prompted, create an HP account and register the printer.
7. Follow the on-screen instructions to connect the printer to your Wi-Fi network.

Wireless to a USB connection

This topic describes how to change the connection from Wireless to USB.

Windows/macOS

1. Connect the printer and computer using a USB cable.
2. Open the HP Smart app on your computer. See Use the HP Smart app to print, scan, and manage.
3. From HP Smart, click or tap the Plus icon or **Add Printer**, and then choose the option to select or add a printer. Follow the instructions to add the printer.
4. When prompted, create an HP account and register the printer.

3 Load media

This section helps you load different media into the printer.

Load paper

This topic describes how to load paper into the input tray.

NOTE: To avoid paper jams:

- Never add or remove paper from the input tray during printing.
- Before loading the input tray, remove all of the paper from the input tray and straighten the stack.
- Use paper that is not wrinkled, folded, or damaged.
- Always use 1 size paper. For example, do not place A5 paper over A4 size paper.
- Always push the paper guides to ensure paper does not slant/skew while picking up by printer.

To load paper

1. Lift the tray cover and remove paper from the input tray, if any.

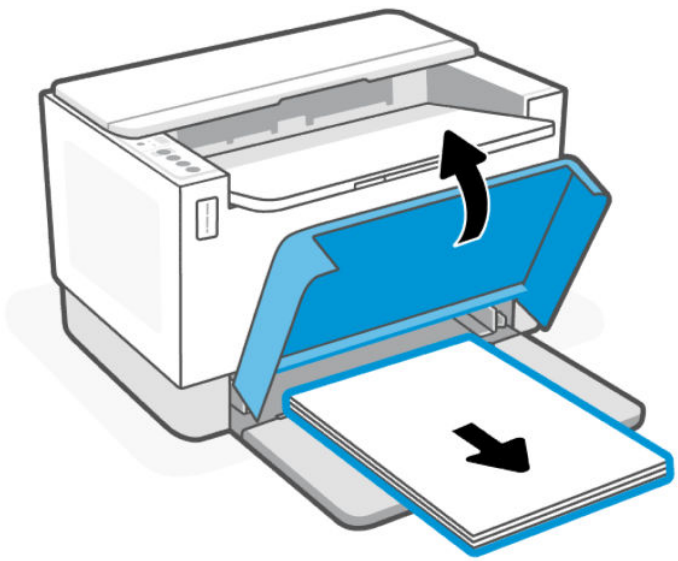

TIP: To load Legal-size paper, lift the printer cover and, if necessary, leave it open. Depending on your printer model, you might also need to lower the tray door.

2. Slide the paper guides to the edges of the input tray.

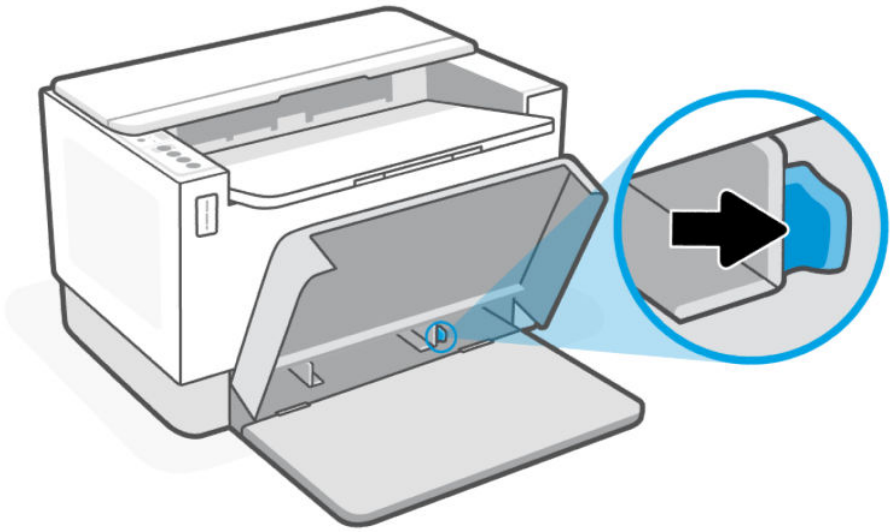

3. Insert the stack of paper into the input tray with the top forward and the side to be printed on facing up.

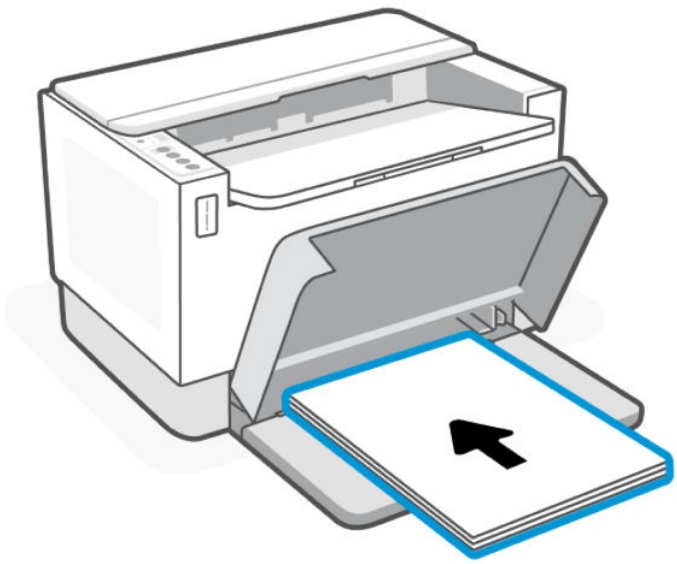

4. Slide the paper guides until they touch the edges of the media.

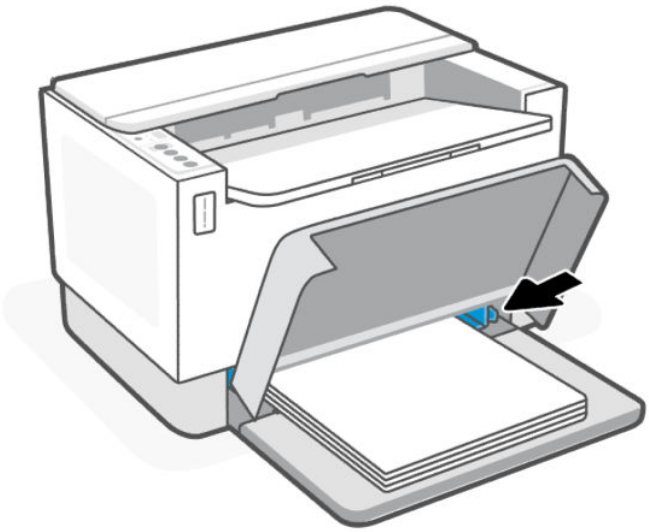

5. Lower the tray cover and extend the output tray.

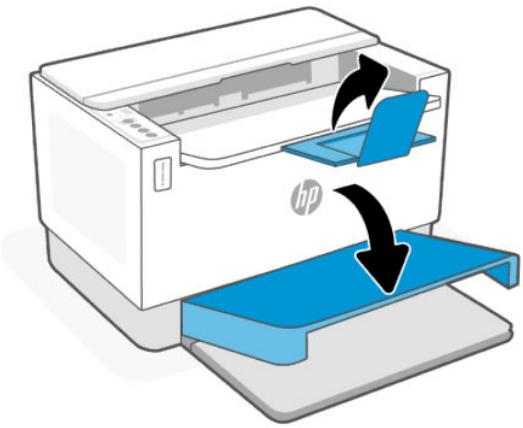

Load envelopes

This topic describes how to load envelopes into the input tray.

For a list of supported sizes and tray capacity, visit HP support website. Click Product information, and then click the product specifications for your printer.

For more information about product specific support links, see HP support.

To load envelopes

1. Remove all paper from the input tray.

2. Insert the envelope into the middle of the input tray, with the top edge of the envelope toward the back of the tray. The side to be printed on should face up.

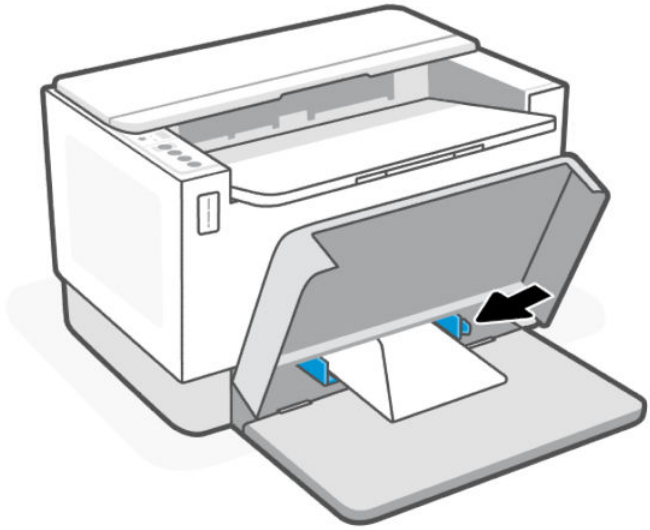

3. Slide the paper guides until they touch the edges of the media.
4. Lower the tray cover and extend the output tray.

Load labels

This topic describes how to load labels into the input tray.

For a list of supported sizes and tray capacity, visit HP support website. Click Product information, and then click the product specifications for your printer.

For more information about product specific support links, see HP support.

To load labels

1. Remove all paper from the input tray.

2. Insert the sheet of labels into the middle of the input tray, with the top edge of the sheet toward the back of the tray. The side to be printed on should face up.

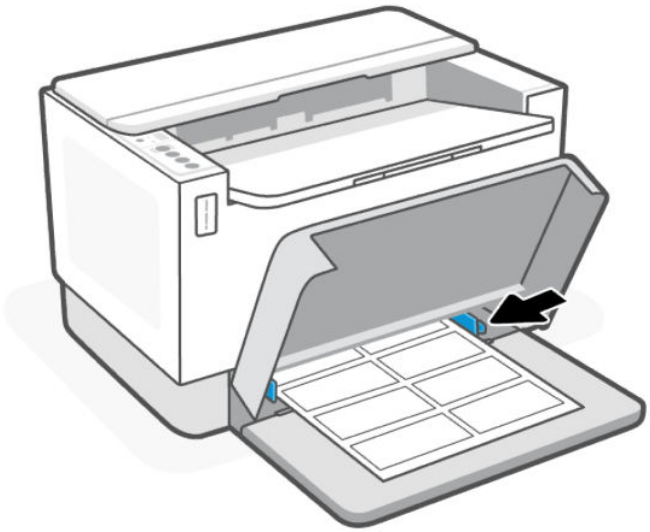

3. Slide the paper guides until they touch the edges of the media.
4. Lower the tray cover and extend the output tray.

4 Print

This printer is designed to work with the HP Smart app, a software application that makes it easy to print, scan, and manage your printer from a smartphone, laptop, desktop computer, or other devices. The HP Smart app is compatible with iOS, Android, Windows 10, and Mac.

Learn more about printing with the HP Smart app as well as printing from other software applications using the HP printer driver. Also find basic instructions for printing with Apple AirPrint on a Mac and printing from mobile devices using the print commands provided in the device software.

Be sure to check out tips for successful printing to ensure you get the best results every time you print.

Print from a Windows computer

This topic describes how to print from a Windows computer.

1. Make sure you have installed the HP Smart app. See Use the HP Smart app to print, scan, and manage.
2. Open the document you wish to print.
3. From the **File** menu in your software program, select the **Print** option.
4. Click the button that opens the **Properties** dialog box.

   Depending on your software application, this button might be called **Properties**, **Options**, **Setup**, or **Preferences**.
5. Make sure your printer is selected.
6. Change any print settings, and Click **OK**.
7. Click **Print** or the **OK** button to print the job.

Print from a Mac computer

This topic describes how to print from a Mac computer.

1. Make sure you have installed the HP Smart app. See Use the HP Smart app to print, scan, and manage.
2. From the computer, open **System Preference**, and select **Printers and Scanners**.
3. Click the Add button **+**, select the printer from the printer list, and then click **Add**.
4. Once connected, open the document you wish to print and use the **Print** command.
5. Make sure the desired printer is selected.
6. Change any print settings.
7. Click **Print** to print the document.

Print with mobile devices

This topic describes how to print from mobile devices.

You can use the HP Smart app to print documents and photos from your mobile device, social media account, or cloud storage. For more information, see Use the HP Smart app to print, scan, and manage.

You can also print directly from your mobile devices using AirPrint (iOS) or HP Print Service Plugin (Android):

- **iOS:** Devices running iOS 4.2 or later have AirPrint pre-installed.
- **Android:** Download the HP Print Service Plugin from the Google Play Store or your favorite app store, and then enable it on your device.

NOTE: You can print using HP Smart or AirPrint/HP Print Service Plugin when the mobile device is on the same network as the printer or a different network (using Wi-Fi Direct).

Print while connected to same Wi-Fi network

You can print documents and photos from your mobile device when the device is on the same Wi-Fi network as the printer.

Visit www.hp.com/go/mobileprinting for more information on mobile printing.

NOTE: Make sure your mobile device and printer are connected to the same Wi-Fi network. See Connect your printer to a Wi-Fi network using Wi-Fi Protected Setup (WPS).

Print without connecting to same Wi-Fi network (Wi-Fi Direct)

With Wi-Fi Direct, you can directly connect your computer or mobile device to the printer and print wirelessly—without connecting your computer or mobile device to an existing wireless network.

Visit www.hp.com/go/wifidirectprinting for more information on Wi-Fi Direct.

NOTE:

- Make sure Wi-Fi Direct on your printer is turned on. To check, open the EWS (see To access and use EWS), click the **Networking** tab, and then select **Wi-Fi Direct Setup**.
- Up to 5 computers and mobile devices can connect to the printer using Wi-Fi Direct connection.

To turn Wi-Fi Direct on or off from the control panel:

1. Press and hold the Information button for 5 seconds and then release the button.

   All control panel buttons will light up.

2. Press the Resume button and the Wireless button at the same time.

TIP: Press the Information button to print a report to check Wi-Fi Direct status and password.

5 Configure your printer

This section describes how to configure your printer.

Use Web Services

The printer offers innovative, cloud-based solutions, such as print anywhere, scan-and-save to cloud, and other services (including supplies auto replenishment).

For more information, visit the HP Smart website http://www.hpsmart.com.

NOTE: To use these cloud-based solutions, the printer must be connected to the Internet. Unless otherwise agreed, HP can modify or cancel these cloud-based solution offerings at its discretion.

Set up Web Services

This topic describes how to set up Web services.

1. Before you set up Web Services, make sure your printer is connected to the Internet.
2. Open the printer home page (the embedded web server or EWS). See To open EWS using HP Smart (iOS, Android, and Windows 10) .
3. Click the **HP Web Services** tab.
4. In **Web Services Settings**, click **Enable**, and follow the on-screen instructions to accept the terms of use.
5. If prompted, choose to allow the printer to check for and install printer updates.

   NOTE:

   - If prompted for a password, enter the PIN from the label on your printer. See Things to note when accessing EWS.
   - If prompted for proxy settings and if your network uses proxy settings, follow the on-screen instructions to set up a proxy server. If you do not have the details, contact your network administrator or the person who set up the network.
   - If a printer update is available, the printer downloads and installs the update and then restarts automatically. Repeat the instructions above to set up **HP Web Services**.

6. After the printer is connected to the HP server, the printer prints an information sheet. Follow the instructions on the information sheet to finish setting up Web Services.

Remove Web Services

1. Open the printer home page (the embedded web server or EWS). See To access and use EWS.
2. Click the **HP Web Services** tab.
3. In **Web Services Settings**, click **Disable Web Services**.

Update the printer

HP offers periodic printer updates to improve printer performance, fix issues, or protect your printer against potential security threats.

If your printer is connected to a Wi-Fi or Ethernet network with Internet access, you can update the printer using HP Smart. See Use the HP Smart app to print, scan, and manage.

You can change the setting to auto update from the embedded web server (EWS). From EWS Home page, click **Device Status** tab, click **Printer Updates** at the bottom, and select the desired options.

Configure the printer using EWS

Use EWS to manage printing functions from your computer.

- View printer status information
- Check the information and status of the printing supplies
- Receive notification of printer and supplies events
- View and change the network and the printer settings

To access and use EWS

You can open EWS using one of the following:

- HP Smart app
- HP printer software
- Web browser using IP address
- Web browser using Wi-Fi Direct connection

Things to note when accessing EWS

- If the web browser displays a message indicating that the website is unsafe, select the option to continue. Accessing the website will not harm your device.
- If prompted, enter the default username and password of the printer.
  - **Username:** admin
  - **Password:** Open the toner access door, and look for the PIN number on the label inside the printer.

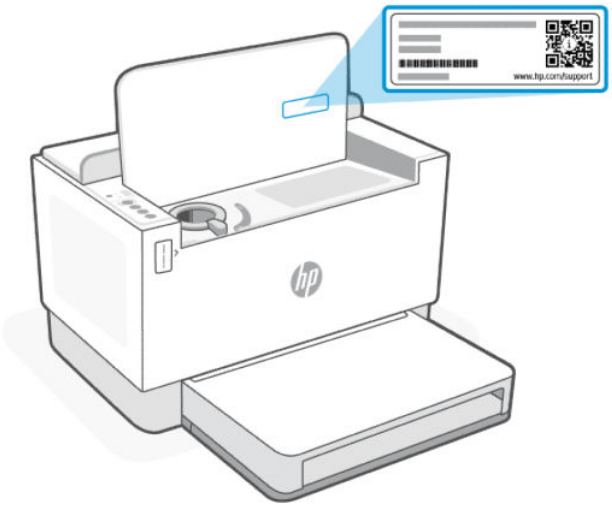

- Depending on how the printer is connected, some features in EWS might not be available.
- EWS is not accessible beyond the network firewall.

To open EWS using HP Smart (iOS, Android, and Windows 10)

1. Open the HP Smart app on your computer or mobile device. For more information, see Use the HP Smart app to print, scan, and manage.
2. From HP Smart, select your printer, and then click or tap **Advanced Settings.**

To open EWS using an IP address (Wi-Fi or Ethernet connection)

1. Find out the IP address. Press the Information button ⓘ on the printer to print an information page.
2. Open a web browser, type the IP address or hostname in the address bar, and then click or tap **Enter**.

To open EWS using an IP address (Wi-Fi Direct connection)

1. Make sure your device and the printer are connected using Wi-Fi Direct. See Print without connecting to same Wi-Fi network (Wi-Fi Direct)
2. Open a web browser, type the following IP address or hostname of the printer in the address bar, and then click or tap **Enter**.

   IP Address: 192.168.223.1

To open EWS using HP Printer software (Windows 7)

1. From the computer desktop, click **Start**, select **All Programs**, click **HP**, click the folder for the printer, select the icon with the printer's name, and then open **HP Printer Assistant**.
2. In the **HP Printer Assistant**, select **Print** tab.
3. Select **Printer Home Page (EWS)**.

Configure IP network settings

Use the following sections to configure the printer network settings.

View or change network settings

Use EWS to view or change IP configuration settings.

1. Open EWS. For more information, see To access and use EWS.
2. Click the **Networking** tab to obtain network information. Change settings as needed.

Rename the printer on a network

To rename the printer on a network so that it can be uniquely identified, use the Embedded Web Server.

1. Open EWS. For more information, see To access and use EWS.
2. Open the **System** tab.
3. On the **Device Information** page, the default printer name is in the **Device Description** field. You can change this name to uniquely identify this printer.

   NOTE: Completing the other fields on this page is optional.

4. Click the **Apply** button to save the changes.

Manually configure IPv4 TCP/IP parameters

Use EWS to manually set an IPv4 address, subnet mask, and default gateway.

1. Open EWS. For more information, see To access and use EWS.
2. On the **Networking** tab, click **IPv4 Configuration** in the left navigation pane.
3. From the **IP Preferred Address Method** drop-down menu, select **Manual**, and then edit the IPv4 configuration settings.
4. Click the **Apply** button.

Assign or change the system password using EWS

Assign an administrator password for access to the printer and EWS so that unauthorized users cannot change the printer settings.

1. Open EWS. For more information, see To access and use EWS.
2. On the **System** tab, click the **Administration** link in the left navigation pane.
3. In the area labeled **Product Security**, enter the password in the **Password** field.
4. Re-enter the password in the **Confirm Password** field.
5. Click the **Apply** button.

   NOTE: Make note of the password and store it in a safe place.

Change energy-conservation settings

The printer includes several economy features to conserve energy and supplies.

Set the Sleep/Auto Off After Inactivity setting

Use EWS to set the amount of idle time before the printer enters sleep mode.

Complete the following procedure to change the Sleep/Auto Off After Inactivity setting:

1. Open EWS. For more information, see To access and use EWS.
2. Click the **System** tab, and then select **Energy Settings**.
3. From the **Sleep/Auto Off After Inactivity** drop-down menu, select the time for the delay.
4. Click the **Apply** button.

Set the Shut Down After Inactivity delay and configure the printer to use 1 watt or less of power

Use EWS to set the amount of time before the printer shuts down.

NOTE: After the printer shuts down, the power consumption is 1 watt or less.

Complete the following procedure to change the Shut Down After Inactivity setting:

1. Open EWS. For more information, see To access and use EWS.
2. Click the **System** tab, and then select **Energy Settings**.
3. From the **Shut Down After Inactivity** drop-down list, select the time for the delay.
4. Click the **Apply** button.

Set the Delay Shut Down setting

Use the EWS to select whether or not the printer delays shutting down after the Power button is pressed.

Complete the following procedure to change the Delay Shut Down setting:

1. Open EWS. For more information, see To access and use EWS.
2. Click the **System** tab, and then select **Energy Settings**.
3. Select or clear the **Delay when ports are active** option.

   NOTE: When this option is selected the printer will not shut down unless all ports are inactive. An active network link will prevent the printer from shutting down.

6 Manage toner, media, and parts

This section describes how to check toner level, refill the toner, replace drum, and order supplies, accessories, and parts.

Check and refill the toner

The printer is pre-filled with toner at purchase. The value of bars on the toner gauge are estimated toner levels and may vary slightly from the actual toner level.

NOTE: The printer only works with original HP toner refill kits. If original HP toner is not installed in the printer, the printer will not work as expected.

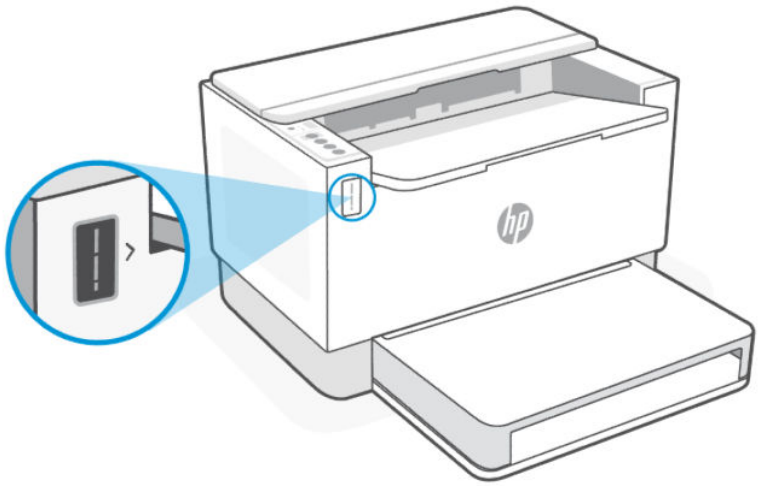

Types of toner refill kit

HP toner refill kits (TRK) are available in two options and depending on the requirement you can purchase anyone of the TRK.

- High Capacity TRK - order this TRK when the toner is completely empty and no more printing can be done.

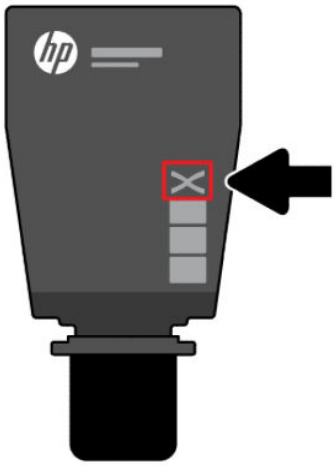

- Standard TRK - order this TRK when the toner is partly depleted.

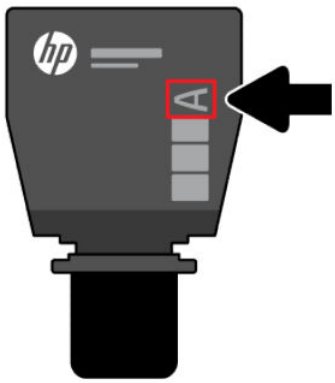

NOTE: You can identify the TRK with letter "X" (for High capacity) and letter "A" (for Standard) on the TRK.

For ordering the TRK, see Order supplies, accessories, and parts.

Toner level indicator states

Check the toner level indicator before ordering the TRK.

Table 6-1 Toner level indicator states

Toner level	Description
	Three lights indicate that toner is full and you cannot add toner anymore.
	Two lights indicate that toner is partly depleted and you can add toner if required. NOTE: One Standard TRK can be added. For more information, see Types of toner refill kit.

Table 6-1 Toner level indicator states (continued)

Toner level	Description
	One light (the bottom light) indicate that toner is at reserve, but you can still continue to print. The toner level indicator glows steadily with amber light indicating reserve level. NOTE: One High Capacity TRK or two Standard TRK can be added. For more information, see Types of toner refill kit.
	One light (the bottom light) glows steadily and the toner level indicator also blinks continuously with amber light. It indicates that toner is very low and no more printing can be done. NOTE: One High Capacity TRK or two Standard TRK must be added. For more information, see Types of toner refill kit.

To refill the toner

When the toner levels show low on the toner level indicator, follow these steps to refill the toner.

1. Make sure the printer is powered on, and then open the toner access door.

NOTE: The port indicator will only display the Unlock icon if a toner refill is possible.

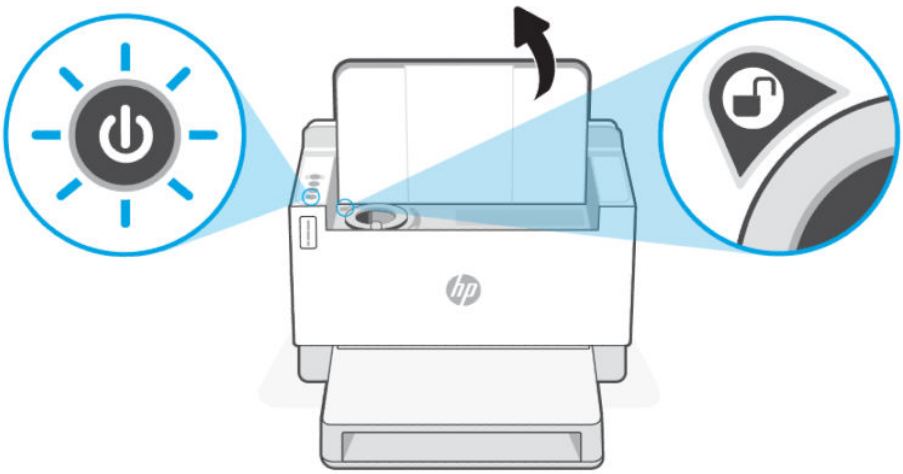

2. Shake the toner pack for a few seconds and remove the cap.

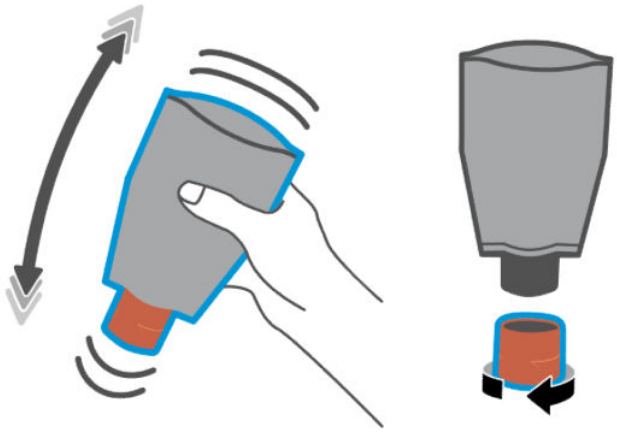

3. Open the toner access door, and then insert the toner pack until it clicks into place. Ensure that the toner pack is fully inserted into the port.

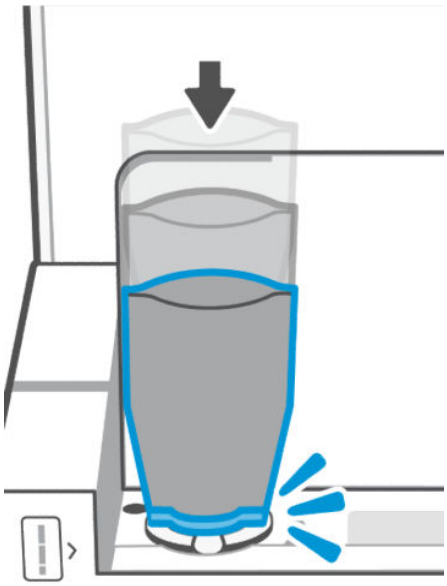

4. Rotate the refill lock ring counterclockwise until it stops.

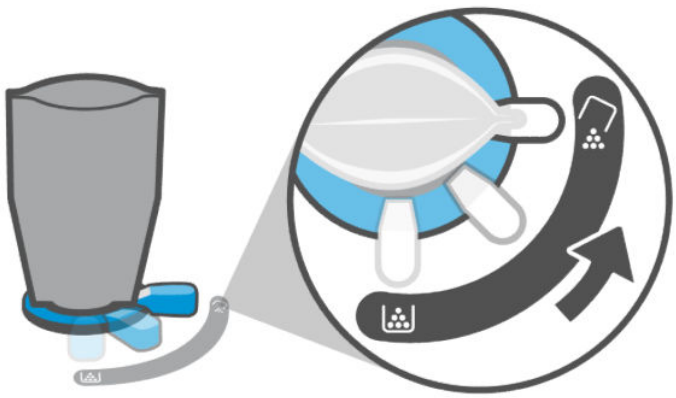

5. Gently squeeze the toner pack to empty it into the tank.

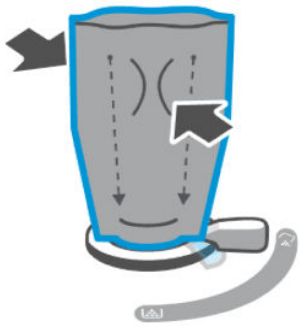

6. Turn the lock ring lever clockwise back to its original position.

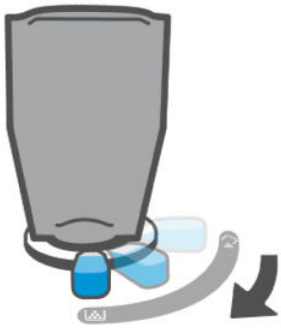

7. Remove the toner pack from the port and close the toner access door. Recycle the toner pack, visit www.hp.com/recycle.

NOTE: After emptying the toner pack, the printer might take a few minutes to be ready for use.

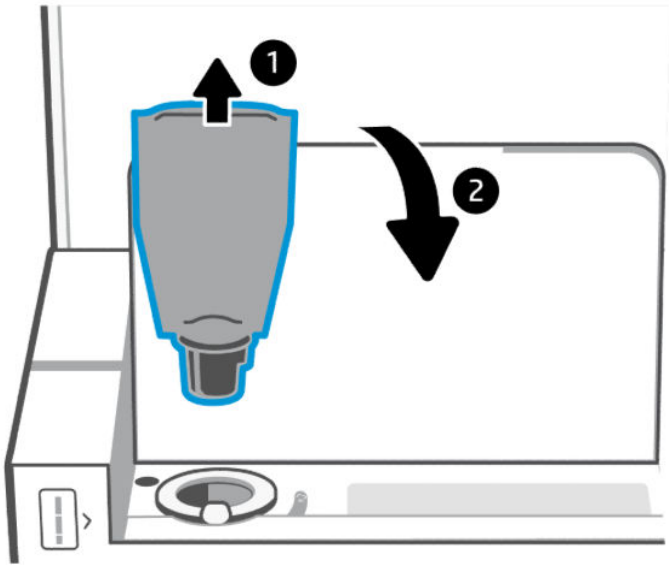

Replace the imaging drum

When the imaging drum has surpassed 50,000 prints and print quality becomes poor, the printer is past its service life and requires authorized service maintenance.

When the toner drum reaches its end of service life, the toner level indicator light (Amber) blinks continuously. You can print an information report to check the status of the drum. If the information report shows error "Er/32" then it indicates the drum has reached end of its life. You can contact HP support for more information.

***Disclaimer**: The yield of imaging drum is approximately 50,000 single-sided pages (letter or A4 size paper). There are many factors that determine the actual drum useful life, such as temperature, humidity, type of paper, type of toner used and other variables. The imaging drum unit is replaceable through authorized service provider.*

Order supplies, accessories, and parts

This section describes how to order supplies and manage accessories.

Order

Table 6-2 Order

Description	URL Links
Order supplies and paper	www.hp.com/go/suresupply
Order genuine HP parts or accessories	www.hp.com/buy/parts
Order through service or support providers	Contact an HP-authorized service or support provider.
Order using the HP Embedded Web Server (EWS)	To access, in a supported Web browser on the computer, enter the printer IP address in the address/URL field. The EWS provides options for purchasing Original HP supplies.

NOTE: You can also order using the HP Smart app. For information about this app, see Use the HP Smart app to print, scan, and manage.

Supplies and accessories

Table 6-3 Supplies and accessories

Item	Description	TRK number	Part number	Countries in use
HP 153A Black Original LaserJet Tank Toner Reload Kit	Standard-capacity replacement black toner reload kit	153A	W1530A	European Economic Area, Switzerland, UK, and Israel only*
HP 153X Black Original LaserJet Tank Toner Reload Kit	High-capacity replacement black toner reload kit	153X	W1530X	European Economic Area, Switzerland, UK, and Israel only*
HP 154A Black Original LaserJet Tank Toner Reload Kit	Standard-capacity replacement black toner reload kit	154A	W1540A	Africa, Latin America, Middle East, CIS, non-EU Balkan countries/regions, and Asia Pacific (except China, India, Australia, and New Zealand) only

Table 6-3 Supplies and accessories (continued)

Item	Description	TRK number	Part number	Countries in use
HP 154X Black Original LaserJet Tank Toner Reload Kit	High-capacity replacement black toner reload kit	154X	W1540X	Africa, Latin America, Middle East, CIS, non-EU Balkan countries/regions, and Asia Pacific (except China, India, Australia, and New Zealand) only
HP 158A Black LaserJet Tank Toner Reload Kit	Standard-capacity replacement black toner reload kit	158A	W1580A	China and India only
HP 158X Black LaserJet Tank Toner Reload Kit	High-capacity replacement black toner reload kit	158X	W1580X	China and India only

*The product is region-specific for the regions and countries listed above. However, nothing herein must be deemed as an authorization from HP to import products into the European Economic Area, Switzerland, and the UK from any country outside that region.

7 Solve problems

This section suggests solutions to common problems.

You can also get help from the HP Smart app. HP Smart provides alerts for printer issues (jams and other problems), links to help content, and options to contact support for additional assistance. For more information, see Use the HP Smart app to print, scan, and manage.

If the suggestions do not solve the problems, try getting help using one of the support services, see HP support.

HP support

For the latest product updates and support information, visit the product specific links given below. HP online support provides a variety of options for help with your printer:

Table 7-1 HP support

Icons	Description
	Get software and drivers: Download software, drivers, and firmware you need for the printer.
	Ask the community: Join the community forums to find solutions, ask questions, and share tips.
	HP Diagnostic Tools: Use HP online tools to detect your printer and find recommended solutions.

Table 7-2 Product support link

Product name	Support links
HP LaserJet Tank 2502dw HP LaserJet Tank 2504dw HP LaserJet Tank 2506dw	hp.com/support/ljt250x
HP LaserJet Tank 1502w HP LaserJet Tank 1504w	hp.com/support/ljt150x
HP LaserJet Tank 1020 HP LaserJet Tank 1020w	hp.com/support/ljt1020

Contact HP

If you need help from an HP technical support representative to solve a problem, visit the www.hp.com/support. The following contact options are available at no cost for in-warranty customers (HP agent-assisted support for out-of-warranty customers may require a fee):

Table 7-3

Icons	Description
	Chat with an HP support agent or the HP Virtual Agent online.
	Call an HP support agent.

When contacting HP support, be prepared to provide the following information:

- Product name (located on the printer)
- Product number (located on a label inside the printer)
- Serial number (located on a label inside the printer)

Register printer

By taking just a few minutes to register, you can enjoy quicker service, more efficient support, and product support alerts.

If you did not register your printer while installing the software, you can register now at www.register.hp.com.

Additional warranty options

Extended service plans are available for the printer at additional costs. See HP support for product specific support links, select your country/region and language, then explore the service plan options available for your printer.

Interpret control-panel light patterns

This topic describes the printer control-panel light patterns.

USB model

The Attention light is on

Table 7-4 Attention light is on

Light status	Description
Attention light on, Paper light blinks. 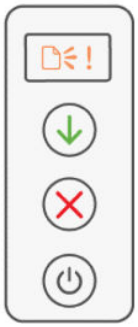	If the Paper light blinks, the printer might be out of paper (see Load paper) or paper might be jammed (see Clear paper jams). If you are sending a manual feed job, load paper, and press the Resume button to continue.

The Attention light blinks

Table 7-5 Attention light blinks

Light status	Description
Attention light blinks. 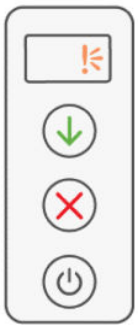	Verify that the printer toner access door or the rear access is correctly closed.

Interpreting Error Codes

This topic describes about different error codes. Print a configuration report to check for the error.

Error go/01

The printer is in manual-feed mode.

The Attention light is blinking, the Resume light is on, and the Paper icon is displayed on the control panel display.

1. Load the correct paper type and size into the input tray.

2. Press the Resume button to continue.

Error go/02

The printer is processing a manual duplex job.

1. Load the printed pages into the input tray with the side to be printed facing down and the top toward the back of the printer.
2. Press the Resume button to continue.

Error go/03

The actual paper size does not match the paper settings.

1. Load the correct paper size into the input tray, or change the paper settings in the printer software.
2. Press the Resume button to continue with the currently loaded paper.

Error go/04

The printer received a request for Google Cloud Print registration.

Press the Resume button to connect.

Error go/99

Prompt to unlock hidden EWS service page.

1. Open EWS web page and click the **HP Web Services** tab.
2. In **Web Services Settings**, click **Enable** to unlock the EWS service page.

Error Er/01

The input tray is empty.

Load paper in the input tray and press the Resume button to continue.

Error Er/02

The rear door is open.

Make sure the rear door is completely closed.

Error Er/03

The printer failed to pick a sheet of paper to print.

1. Reload the paper in the input tray.
2. Press the Resume button to continue.

Error Er/04

Paper is jammed in the input tray/printer base.

1. Clear the jam in input tray area or from the printer base.

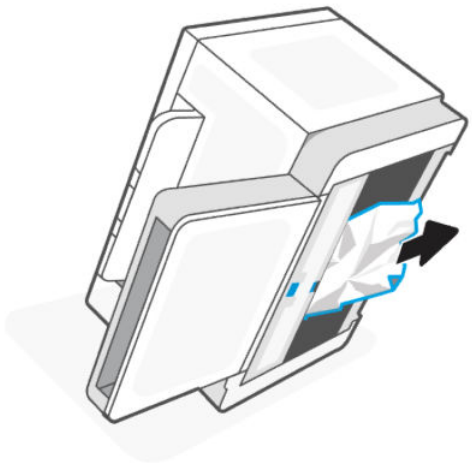

2. After clearing the paper jam, press the Resume button to continue.

For more information, see Clear paper jams.

Error Er/05 or Er/42

Paper jam in the rear area.

Clear jam in the rear area. Close the door and your print job should resume automatically.

For more information, see Clear paper jams.

Error Er/06

Paper jam in the output tray area.

1. Clear jam in the output tray area.
2. After clearing the paper jam, press the Resume button to continue.

For more information, see Clear paper jams.

Error Er/08

The toner level is too low for printing.

Refill the toner. Purchase any of the following Toner Reload Kits and other supplies from the HP Store or local retailers.

- HP 153A Black Original LaserJet Tank Toner Reload Kit
- HP 153X Black Original LaserJet Tank Toner Reload Kit
- HP 154A Black Original LaserJet Tank Toner Reload Kit

- HP 154X Black Original LaserJet Tank Toner Reload Kit
- HP 158A Black LaserJet Tank Toner Reload Kit
- HP 158X Black LaserJet Tank Toner Reload Kit

For more information, see Check and refill the toner.

Error Er/20

Toner/Imaging drum sensor error.

1. Turn off the printer.
2. Wait for 30 seconds and turn on the printer. If the problem persists, contact HP Support.

Error Er/23

The printer is running low on memory (Print, Copy, or Scan).

- Press the Cancel button to cancel current job.
- Break the job into smaller jobs that contain fewer pages and resend.
- Avoid doing multiple tasks at a time such as scanning while printing.

Error Er/25

The loaded paper does not match the size of print job.

Check the paper type in the paper tray and adjust the printer settings to match, replace the paper or press the Resume button to continue with the size currently loaded.

Error Er/26

The printer has experienced a general engine error.

Press the Resume button to continue. If error repeats, turn off the printer. Wait for 30 seconds and turn on the printer. If the problem persists, contact HP Support.

Error Er/31

Toner access door is open, but toner does not need to be reloaded (full).

The Refill toner indicator starts blinking Amber light.

The imaging drum cannot be reloaded because the imaging drum is full.

Error Er/32

Imaging drum near to end of life cycle.

The imaging drum needs to be replaced soon and cannot be reloaded. Continue printing until print quality becomes unacceptable. To replace the imaging drum contact HP Support.

Error Er/50, Er/51, Er/52, Er/54, Er/55, Er/58, Er/59, Er/61

There is an issue with the print engine.

Turn off the printer. Wait for 30 seconds and turn on the printer. If the problem persists, contact HP Support.

Error Er/61

An error occurred during Wi-Fi Protected Setup (WPS) and the printer was not able to connect to the network.

Press the Cancel button to continue and then try connecting the printer to the wireless network again.

Error Er/66

The printer cannot detect the wireless hardware.

Press the Resume button to continue without the wireless hardware. Else, turn off the printer. Wait for 30 seconds and turn on the printer. If the problem persists, contact HP Support.

Error Er/77

Secure Device Failure.

Turn off the printer. Wait for 30 seconds and turn on the printer. If the problem persists, contact HP Support.

Print reports

NOTE: This section is applicable to wireless printers only.

For USB model, press and hold the Resume button for 5 seconds to print a configuration report.

Table 7-6 Print reports

Printer report	How to print	Description
Information Report	Press the Information button .	Provides a summary of the printer information and its current status.
Configuration Report	Press and hold the Information button for 5 seconds until all the buttons are lit. Press the Resume button to print a configuration report.	Shows the printer usage log (pages printed, images scanned), event logs, copy/energy settings, network status and more.
Wireless Network Test Report	Press and hold the Information button for 5 seconds until all the buttons are lit. Press the Information button and the Resume button at the same time. Alternatively, open embedded web server (EWS), click **Networking** tab, and click **Wireless Configuration**, and then click **Print Test Report**.	Shows the diagnostics results for the status of the wireless network, wireless signal strength, detected networks, and more.

Table 7-6 Print reports (continued)

Printer report	How to print	Description
Web Service information page	Open embedded web server (EWS), click **HP Web Services** tab, and click **Web Services Settings** and then click **Print Information Sheet**. If you have not enabled the **Web Services**, click **Enable** to **Print Information Sheet**.	Provides different instructions to help you turn on Web Services, set up Web Services, fix connection issues, and more.
Adjust Alignment Test Page	Open embedded web server (EWS), click **System** tab, and click **Service**. Follow the on-screen instructions in **Adjust Alignment** to position the image on desired location on the paper.	Prints an alignment page.

Restore original factory defaults and settings

If you disable some functions or change some settings and want to change them back, you can restore the printer to the original factory settings or network settings

1. Open EWS. See To access and use EWS.
2. On the **System** tab, click **Service**.
3. In the **Restore Defaults** area, click the **Restore defaults** button.

   The printer automatically restarts.

Printer does not pick up paper or misfeeds

The following solutions can help solve problems if the printer is not picking up paper from the input tray or is picking up multiple sheets of paper at one time. Either of these situations can result in paper jams.

The product does not pick up paper

If the product does not pick up paper from the input tray, try these solutions.

1. Open the product and remove any jammed sheets of paper.
2. Load the tray with the correct size of paper for your job.
3. Make sure the paper size and type are set correctly.
4. Make sure the paper guides in the tray are adjusted correctly for the size of paper. Adjust the guides to the appropriate indentation in the tray.
5. Clean the pickup roller.

NOTE: If the problem persists, visit the HP support site for this printer to learn more about solving paper problems.

Clean the pickup roller

This topic describes about cleaning the pickup roller to avoid paper jams.

1. Turn off the printer.

2. Unplug the power cord from the back of the printer.
3. Remove the stack of paper from the input tray.
4. Flip the printer on its side.

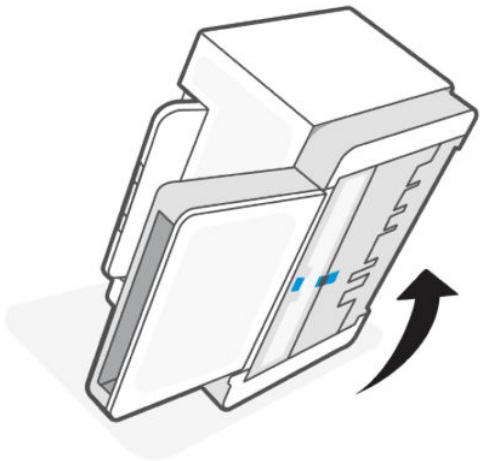

5. Release and hold on to the blue latch, and then remove the panel.

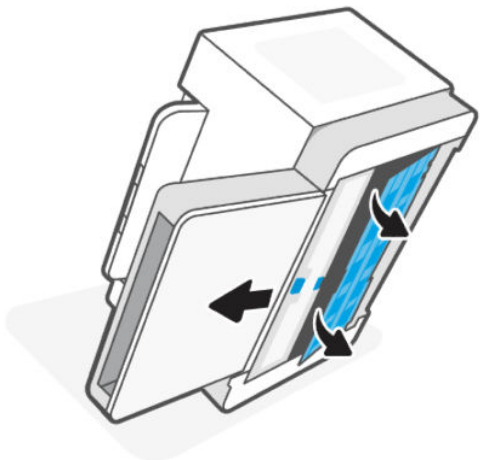

6. Dampen a soft, lint-free cloth with alcohol or water, and then wipe each roller.

NOTE: Apply a moderate amount of pressure to each roller to ensure that they are completely cleaned.

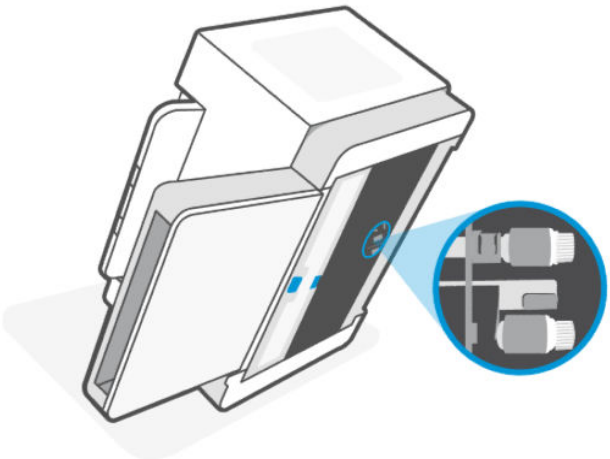

7. Wait approximately 10 minutes to allow the pickup roller to dry completely.
8. Hold onto the blue latch, align, and insert the panel. Release the blue latch to lock the panel in the place.

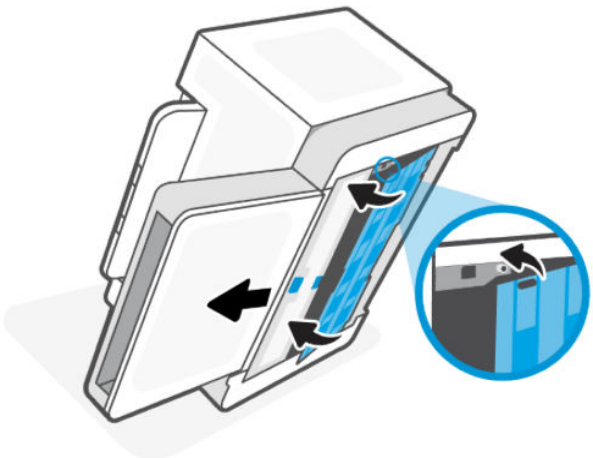

9. Flip the printer back to the original, upright position.

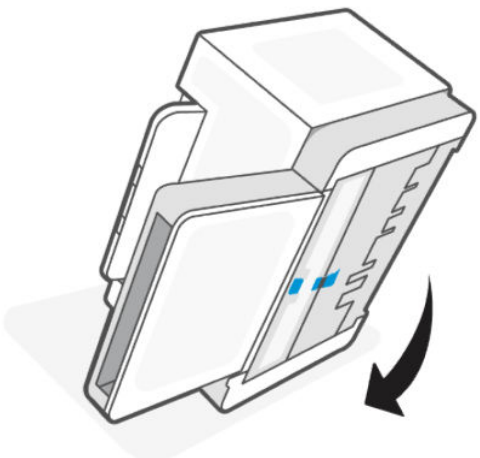

10. Reload the stack of paper into the input tray.

11. Plug the power cord back into the printer, and then turn on the printer.

The product picks up multiple sheets of paper

If the product picks up multiple sheets of paper from the input tray, try these solutions.

1. Remove the stack of paper from the input tray and rotate it 180 degrees, and flip it over. Return the stack of paper to the input tray.
2. Use only paper that meets HP specifications for this product.
3. Use paper that is not wrinkled, folded, or damaged. If necessary, use paper from a different package.
4. Make sure the input tray is not overfilled. If it is, remove the entire stack of paper from the tray, straighten the stack, and then return some of the paper to the input tray.
5. Make sure the paper guides in the tray are adjusted correctly for the size of paper. Adjust the guides to the appropriate indentation in the tray.
6. Make sure the printing environment is within recommended specifications.

Clear paper jams

The following information includes instructions for clearing paper jams from the printer.

Jam locations

Jams can occur at the following locations in the product.

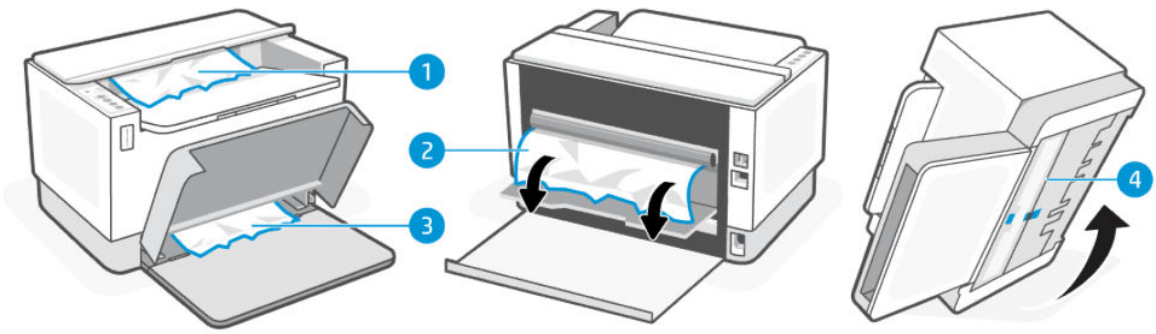

Table 7-7 Jam locations

Location	Description
1	Output bin
2	Rear area
3	Input tray
4	Printer base

NOTE: Jams can occur in more than one location.

Frequent or recurring paper jams?

Follow these steps to solve problems with frequent paper jams. If the first step does not resolve the problem continue with the next step until you have resolved the problem.

1. If paper has jammed in the printer, clear the jam and then print a test page to test the printer.
2. Check that the tray is configured for the correct paper size and type.
   a. Open EWS. See To access and use EWS.
   b. Click the **System** tab, and then click the **Paper Setup** page.
   c. Select the type of paper that is in the tray.
3. Turn the printer off, wait 30 seconds, and then turn it on again.
4. Print a cleaning page to remove excess toner from inside the printer.
5. Print a test page to test the printer.

If none of these steps resolves the problem, the printer might need service. Contact support.

Clear jams from the output areas

Remove any jammed paper that is accessible from the output bin.

When a jam occurs, the Paper light blinks.

1. Turn off the printer.
2. Open the rear door and the transfer door, keep the doors remain open to clear the jam easily.

NOTE: If you see the jammed paper in rear area, do not pull the jammed paper from the rear door.

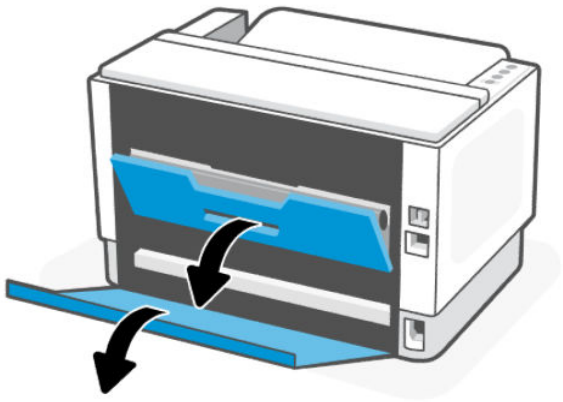

3. Remove any visible jammed paper from the output tray area. Hold both the ends of the paper, pull gently towards you to avoid tearing the paper.

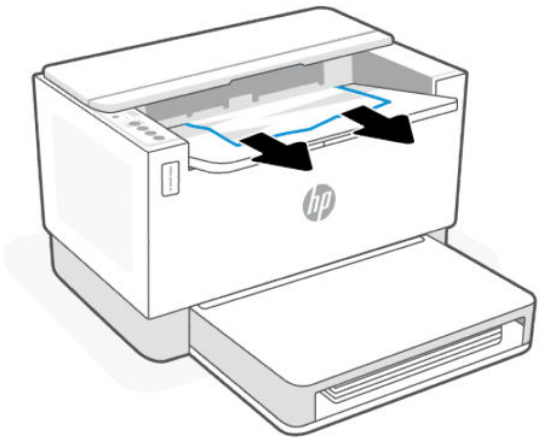

CAUTION: Do not use sharp objects, such as tweezers or needle-nose pliers, to remove jams. Damage caused by sharp objects is not covered by the warranty.

Clear jams from the rear of the printer

Remove any jammed paper that is accessible from the rear of the printer.

1. Turn off the printer.
2. Open rear door.

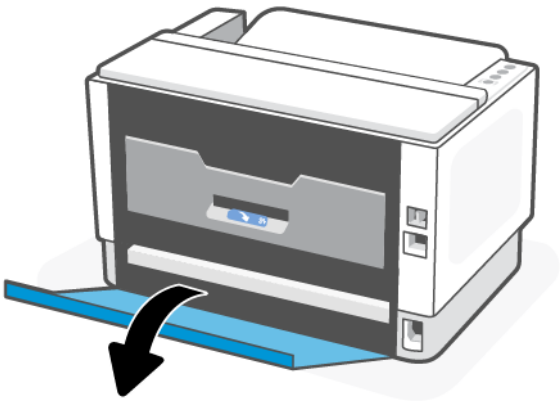

3. If you can see the jammed paper, carefully grasp the jammed paper, and then slowly pull it out of the printer in a downward direction. If you cannot see the jammed paper, proceed to step 4.

NOTE: The automatic two-sided printing option is available for selected models only.

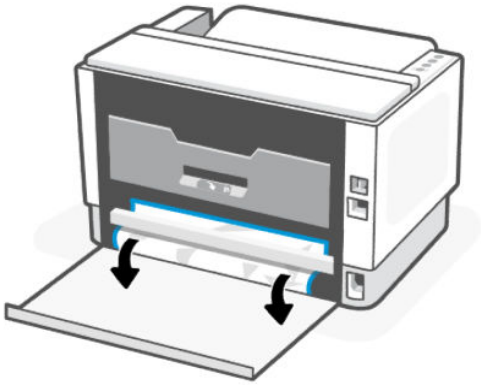

4. Open the transfer door.

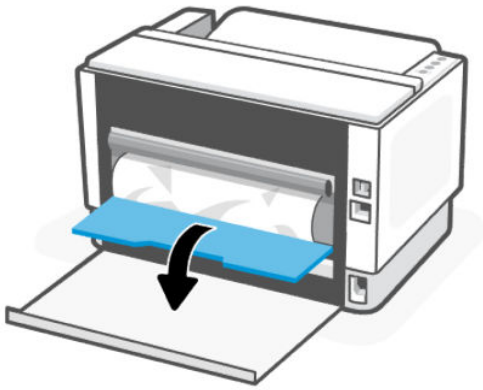

5. Hold the side edge of the paper and remove paper jam from the bottom first.

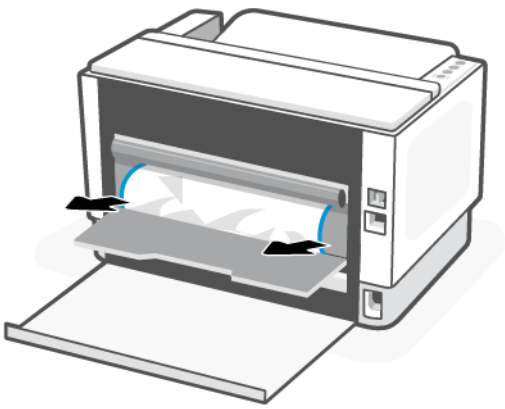

6. Slowly pull the jammed paper out of the transfer roller.

⚠ CAUTION: Do not touch the toner drum as it may cause print quality issues in future printing jobs.

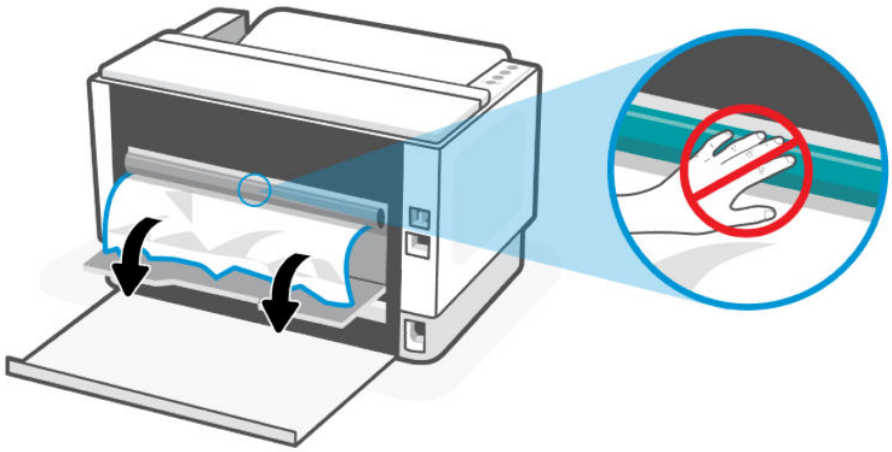

7. Close the transfer door and rear door.

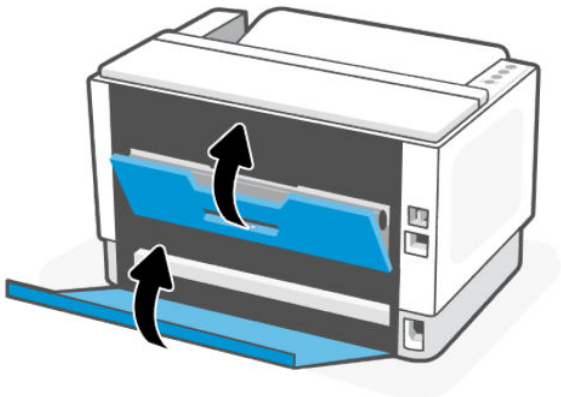

Clear jams in the printer base

Remove any jammed paper that is accessible from the printer base.

1. Turn off the printer.
2. Open rear door and the transfer door.

3. Flip the printer on its side.

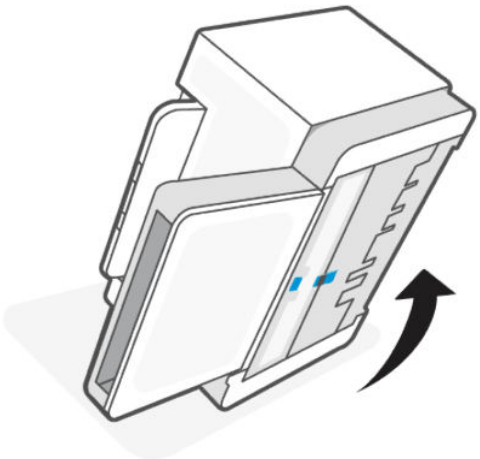

4. Release and hold on to the blue latch, and then remove the panel.

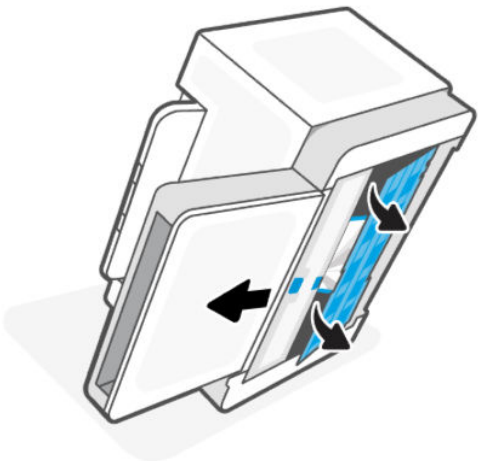

5. Remove the jammed media.

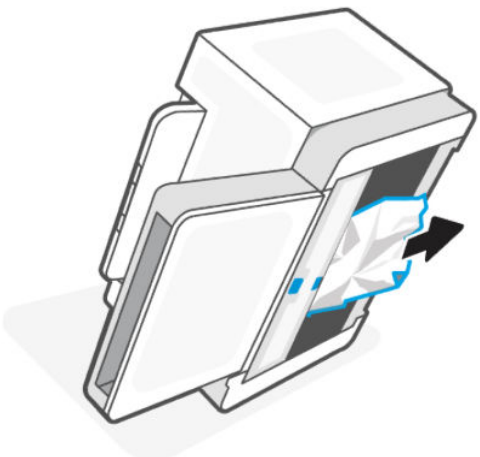

6. Hold onto the blue latch, align, and insert the panel. Release the blue latch to lock the panel in the place.

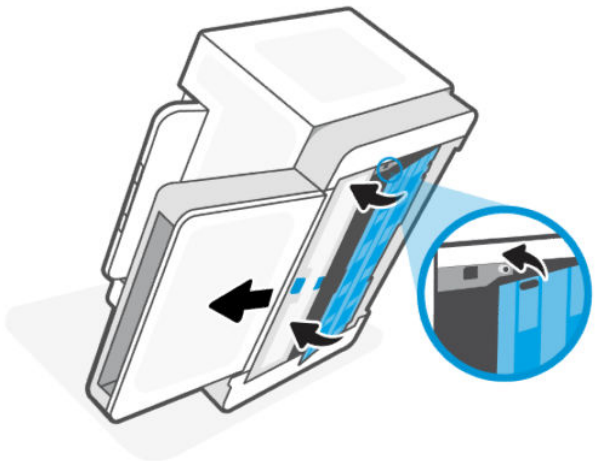

7. Flip the printer back to the original, upright position.

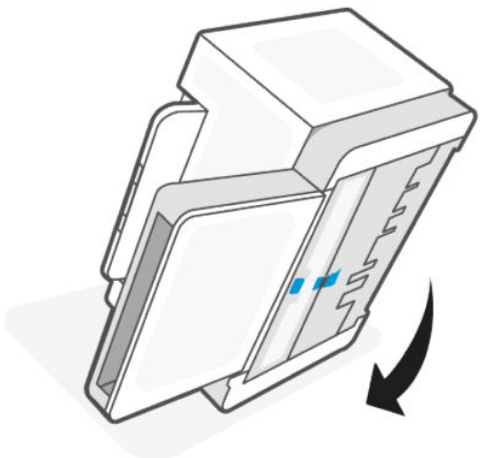

Improve print quality

The following information provides troubleshooting steps to resolve print-quality problems, including the following problems:

- Smears
- Fuzzy print
- Dark print
- Light print
- Streaks
- Missing toner
- Scattered dots of toner
- Loose toner

- Skewed images

To resolve these or other print-quality problems, try the following solutions in the order presented.

For information about resolving specific image defects, see Resolving print quality problems.

Print from a different software program

Try printing from a different software program. If the page prints correctly, the problem is with the software program from which you were printing.

If the page does not print correctly, try updating the printer and print again. See Update the printer.

Check the paper-type setting for the print job

Check the paper type setting when printing from a software program and the printed pages have smears, fuzzy or dark print, curled paper, scattered dots of toner, loose toner, or small areas of missing toner.

Check the paper type setting on the printer

Verify that the tray is loaded with the correct type of paper.

Check the paper type setting (Windows)

1. From the software program, select the **Print** option.
2. Select the printer, and then click the **Properties** or **Preferences** button.
3. Check the paper settings.

Check the paper type setting (OS X)

1. Click the **File** menu, and then click the **Print** option.
2. In the **Printer** menu, select the printer.
3. By default, the print driver displays the **Copies & Pages** menu. Open the menus drop-down list, and then click the **Finishing** menu.
4. Select a type from the **Media Type** drop-down list.

Print a cleaning page

During the printing process paper, toner, and dust particles can accumulate inside the printer and can cause print-quality issues such as toner specks or spatter, smears, streaks, lines, or repeating marks.

Use the following procedure to print a cleaning page.

1. Open EWS. See To access and use EWS.
2. On the **System** tab, click **Service**.
3. In the **Fuser Cleaning mode** area, click **Start** to begin the cleaning process.

Check paper and the printing environment

Perform the following steps:

Step one: Use paper that meets HP specifications

Some print-quality problems arise from using paper that does not meet HP specifications.

- Always use a paper type and weight that this printer supports.
- Use paper that is of good quality and free of cuts, nicks, tears, spots, loose particles, dust, wrinkles, voids, staples, and curled or bent edges.
- Use paper that has not been previously printed on.
- Use paper that does not contain metallic material, such as glitter.
- Use paper that is designed for use in laser printers. Do not use paper that is designed only for use in Inkjet printers.
- Use paper that is not too rough. Using smoother paper generally results in better print quality.

Step two: Check the environment

The environment can directly affect print quality and is a common cause for print-quality or paper-feeding issues. Try the following solutions:

- Move the printer away from drafty locations, such as open windows or doors, or air-conditioning vents.
- Make sure the printer is not exposed to temperatures or humidity outside of printer specifications.
- Do not place the printer in a confined space, such as a cabinet.
- Place the printer on a sturdy, level surface.
- Remove anything that is blocking the vents on the printer. The printer requires good air flow on all sides, including the top.
- Protect the printer from airborne debris, dust, steam, grease, or other elements that can leave residue inside the printer.

Adjust Print Density

Complete the following steps to adjust the print density.

1. Open EWS. See To access and use EWS.
2. Click the **System** tab, and then select **System Setup** from the left navigation pane.
3. Select the correct density settings.
4. Click **Apply** to save the changes.

Resolving print quality problems

The following information provides troubleshooting steps for solving image defect issues, including the following defects:

- Light print
- Gray background or dark print
- Blank pages

- Black pages
- Dark or light bands
- Dark or light streaks
- Missing toner
- Skewed images
- Colors that do not align
- Curled paper

Troubleshoot print quality problems

Image defects, no matter the cause, can often be resolved using the same steps. Use the following steps as a starting point for solving image defect issues.

1. Reprint the document. Print quality defects can be intermittent in nature or can go away completely with continued printing.
2. Check the toner level on the toner level indicator. See Toner level indicator states.
3. Make sure that the driver and tray print mode settings match the media that is loaded in the tray. Try using a different ream of media or a different tray. Try using a different print mode.
4. Make sure that the printer is within the supported operating temperature/humidity range.
5. Make sure that the paper type, size, and weight are supported by the printer. See the printer support page at hp.com/support for a list of the supported paper sizes and types for the printer.

NOTE: The term “fusing” refers to the part of the printing process where toner is affixed to paper.

The following examples depict letter-size paper that has passed through the printer short-edge first.

Table 7-8 Light print

Description	Sample	Possible solutions
Light print: The printed content on the entire page is light or faded.	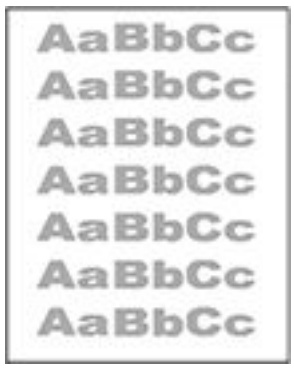	1. Reprint the document. 2. Check the toner level on the toner level indicator. See Toner level indicator states. 3. Print a configuration report and check for life and usage of the toner (Press and hold the information button for 5 seconds until all the buttons are lit, then press the resume button to print a configuration report). 4. Check and refill the toner. 5. If the problem persists, go to hp.com/support.

Table 7-9 Gray background or dark print

Description	Sample	Possible solutions
Gray background or dark print: The image or text is darker than expected.		1. Make sure that the paper in the trays has not already been run through the printer. 2. Use a different paper type. 3. Reprint the document. 4. From the printer EWS, go to the Adjust Toner Density menu, and then adjust the toner density to a lower level. 5. Make sure that the printer is within the supported operating temperature and humidity range. 6. Check and refill the toner. 7. If the problem persists, go to hp.com/support.

Table 7-10 Blank page — No print

Description	Sample	Possible solutions
Blank page — No print: The page is completely blank and contains no printed content.	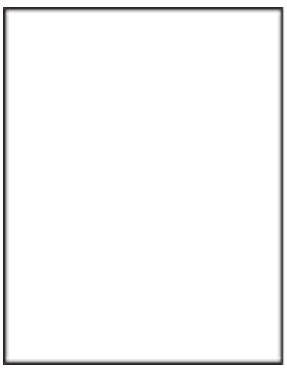	1. Make sure that the toner is genuine HP toner. 2. Check the toner level on the toner level indicator. See Toner level indicator states. 3. Check the paper type in the paper tray and adjust the printer settings to match. If necessary, select a lighter paper type. 4. If the problem persists, go to hp.com/support.

Table 7-11 Black page

Description	Sample	Possible solutions
Black page: The entire printed page is black.		1. Check the toner level on the toner level indicator. See Toner level indicator states. 2. Check and refill the toner. 3. If the problem persists, go to hp.com/support.

Table 7-12 Banding defects

Description	Sample	Possible solutions
Repetitive wide-pitch banding and Impulse bands: Dark or light lines which repeat down the length of the page. They might be sharp or soft in nature. The defect displays only in areas of fill, not in text or sections with no printed content.	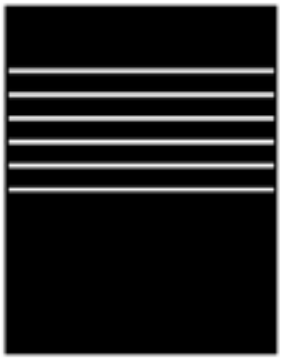	1. Reprint the document. 2. Check and refill the toner. 3. Use a different paper type. 4. If the problem persists, go to hp.com/support.

Table 7-13 Streak defects

Description	Sample	Possible solutions
Light vertical streaks: Light streaks that usually span the length of the page. The defect displays only in areas of fill, not in text or sections with no printed content.		1. Reprint the document. 2. Check the toner level on the toner level indicator. See Toner level indicator states. 3. If the problem persists, go to hp.com/support. NOTE: Both light and dark vertical streaks can occur when the printing environment is outside the specified range for temperature or humidity. Refer to your printer's environmental specifications for allowable temperature and humidity levels.
Dark vertical streaks and ITB cleaning streaks (color models only): Dark lines which occur down the length of the page. The defect might occur anywhere on the page, in areas of fill or in sections with no printed content.		1. Reprint the document. 2. Check the toner level on the toner level indicator. See Toner level indicator states. 3. Print a cleaning page. 4. If the problem persists, go to hp.com/support.

Table 7-14 Fixing/fuser defects

Description	Fixing/fuser	Possible solutions
Hot fuser offset (shadow): Slight shadows, or offsets, of the image repeated down the page. The repeated image might fade with each recurrence.	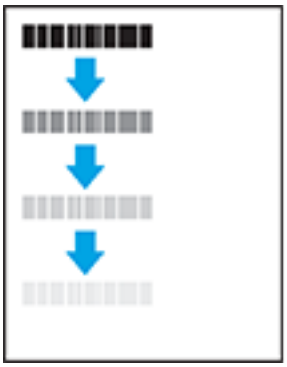	1. Reprint the document. 2. Check the paper type in the paper tray and adjust the printer settings to match. If necessary, select a lighter paper type. 3. If the problem persists, go to hp.com/support.
Poor fusing: Toner rubs off along either edge of page. This defect is more common at the edges of high-coverage jobs and on light media types but can occur anywhere on the page.		1. Reprint the document. 2. Check the paper type in the paper tray and adjust the printer settings to match. If necessary, select a heavier paper type. 3. If the problem persists, go to hp.com/support.

Table 7-15 Image placement defects

Description	Sample	Possible solutions
Margins and skew: The image is not centered, or is skewed on the page. The defect occurs when the paper is not positioned properly as it is pulled from the tray and moves through the paper path.		1. Reprint the document. 2. Remove the paper and then reload the tray. Make sure that all the paper edges are even on all sides. 3. Make sure that the top of the paper stack is below the tray full indicator. Do not overfill the tray. 4. Make sure that the paper guides are adjusted to the correct size for the paper. Do not adjust the paper guides tightly against the paper stack. Adjust them to the indentations or markings in the tray. 5. If the problem persists, go to hp.com/support.

Table 7-16 Output defects

Description	Sample	Possible solutions
Output curl: Printed paper has curled edges. The curled edge can be along the short or long side of the paper. Two types of curl are possible: • **Positive curl:** The paper curls toward the printed side. The defect occurs in dry environments or when printing high coverage pages. • **Negative curl:** The paper curls away from the printed side. The defect occurs in high-humidity environments or when printing low coverage pages.	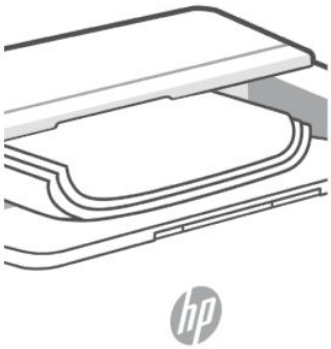	1. Reprint the document. 2. **Positive curl:** From the printer EWS, select a heavier paper type. The heavier paper type creates a higher temperature for printing. **Negative curl:** From the printer EWS, select a lighter paper type. The lighter paper type creates a lower temperature for printing. Try storing the paper in a dry environment prior or use freshly opened paper. 3. Print in duplex mode. 4. If the problem persists, go to hp.com/support.
Output stacking: The paper does not stack well in the output tray. The stack might be uneven, skewed, or the pages might be pushed out of the tray and onto the floor. Any of the following conditions can cause this defect: • Extreme paper curl • The paper in the tray is wrinkled or deformed • The paper is a non-standard paper type, such as envelopes • The output tray is too full		1. Reprint the document. 2. Extend the output bin extension. 3. If the defect is caused by extreme paper curl, complete the troubleshooting steps for Output curl. 4. Use a different paper type. 5. Use freshly opened paper. 6. Remove the paper from the output tray before the tray gets too full. 7. If the problem persists, go to hp.com/support.

Solve wireless network problems

Use the troubleshooting information to help resolve issues.

NOTE: To determine if Wi-Fi Direct printing is enabled on your printer, print an information report from the printer control panel.

Wireless connectivity checklist

- Verify that the printer and the wireless router are turned on and have power. Also make sure that the wireless network in the printer is turned on.
- Verify that the service set identifier (SSID) is correct. Print an information report to determine the SSID.

  On the printer control panel, press the Information button (i).

  If you are not sure the SSID is correct, run the wireless setup again.
- With secured networks, verify that the security information is correct. If the security information is incorrect, run the wireless setup again.

- If the wireless network is working correctly, try accessing other computers on the wireless network. If the network has Internet access, try connecting to the Internet over a wireless connection.
- Verify that the encryption method (AES or TKIP) is the same for the printer as it is for the wireless access point (on networks using WPA security).
- Verify that the printer is within the range of the wireless network. For most networks, the printer must be within 30 m (100 ft) of the wireless access point (wireless router).
- Verify that obstacles do not block the wireless signal. Remove any large metal objects between the access point and the printer. Make sure poles, walls, or support columns containing metal or concrete do not separate the printer and wireless access point.
- Verify that the printer is located away from electronic devices that might interfere with the wireless signal. Many devices can interfere with the wireless signal including motors, cordless phones, security system cameras, other wireless networks, and some Bluetooth devices.
- Verify that the print driver is installed on the computer.
- Verify that you have selected the correct printer port.
- Verify that the computer and printer connect to the same wireless network.
- For OS X, verify that the wireless router supports Bonjour.

The printer does not print after the wireless configuration completes

1. Make sure that the printer is turned on and in the ready state.
2. Turn off any third-party firewalls on your computer.
3. Make sure that the wireless network is working correctly.
4. Make sure that your computer is working correctly. If necessary, restart the computer.
5. Verify that you can open the printer EWS from a computer on the network.

The printer does not print, and the computer has a third-party firewall installed

1. Update the firewall with the most recent update available from the manufacturer.
2. If programs request firewall access when you install the printer or try to print, make sure you allow the programs to run.
3. Temporarily turn off the firewall, and then install the wireless printer on the computer. Enable the firewall when you have completed the wireless installation.

The wireless connection does not work after moving the wireless router or printer

1. Make sure that the router or printer connects to the same network that your computer connects to.
2. Print a information report.
3. Compare the service set identifier (SSID) on the information report to the SSID in the printer configuration for the computer.
4. If the numbers are not the same, the devices are not connecting to the same network. Reconfigure the wireless setup for the printer.

Cannot connect more devices to the wireless printer (Wi-Fi Direct)

1. Make sure that the other computers are within the wireless range and that no obstacles block the signal. For most networks, the wireless range is within 30 m (100 ft) of the wireless access point.
2. Make sure that the printer is turned on and in the ready state.
3. Make sure there are not more than 5 concurrent Wi-Fi Direct users.
4. Turn off any third-party firewalls on your computer.
5. Make sure that the wireless network is working correctly.
6. Make sure that your computer is working correctly. If necessary, restart the computer.

The wireless printer loses communication when connected to a VPN

Typically, you cannot connect to a VPN and other networks at the same time.

The network does not appear in the wireless networks list

- Make sure the wireless router is turned on and has power.
- The network might be hidden.
- Make sure that the printer is within wireless range of the wireless router, and that there are no obstacles blocking the signal.
- The printer operates on the 2.4 GHz and 5 GHz wireless bands.
- Refresh the wireless networks list.
- Try restarting the printer.

The wireless network is not functioning

1. To verify if the network has lost communication, try connecting other devices to the network.
2. Test network communication by pinging the network.
   a. Open a command-line prompt on your computer.
      - For Windows, click **Start**, click **Run**, type `cmd`, and then press **Enter**.
      - For OS X, go to **Applications**, then **Utilities**, and open **Terminal**.
   b. Type `ping` followed by the router IP address.
   c. If the window displays round-trip times, the network is working.
3. Make sure that the router or printer connects to the same network that the computer connects to.
   a. On the printer control panel, press the information button (i) to print an information report.
   b. Compare the service set identifier (SSID) on the information report to the SSID in the printer information for the computer.

c. If the numbers are not the same, the devices are not connecting to the same network. Reconfigure the wireless setup for the printer.

Perform a wireless network diagnostic test

A wireless network diagnostic test can be performed using the printer control panel or the Embedded Web Server (EWS). The wireless network diagnostic test provides information about the wireless network settings.

Method one: Perform a wireless network diagnostic test using the printer control panel

From the printer control panel, press and hold the Information button for 5 seconds, and then press the Information button and the Resume button at the same time.

Method two: Perform wireless network diagnostic test using the EWS

1. Open EWS. See To access and use EWS.
2. Select the **Networking** tab.
3. On the **Wireless Configuration** page, verify that the On option is selected.
4. Click the **Print Test Report** button to print a test page that shows test results.

Reduce interference on a wireless network

The following tips can reduce interference in a wireless network:

- Keep the wireless devices away from large metal objects, such as filing cabinets, and other electromagnetic devices, such as microwaves and cordless telephones. These objects can disrupt radio signals.
- Keep the wireless devices away from large masonry structures and other building structures. These objects can absorb radio waves and lower signal strength.
- Position the wireless router in a central location in line of sight with the wireless printers on the network.

Solve Ethernet connection problems

Check the following:

- The network is operational and the network hub, switch, or router is turned on.
- The Ethernet cable is properly connected between the printer and the router. The Ethernet cable is plugged into the Ethernet port on the printer and the light near the connector lights up when connected.
- Antivirus programs, including spyware protection programs, are not impacting your network connection to the printer. If you know that antivirus or firewall software is preventing your computer from connecting to the printer, use the HP online firewall troubleshooter to help solve the problem.
- Run the HP Print and Scan Doctor to troubleshoot the issue automatically. The utility will try to diagnose and fix the issue. The HP Print and Scan Doctor may not be available in all languages.

A Printer specifications

IMPORTANT: The following specifications are correct at the time of publication, but they are subject to change. For current information, see HP support for product specific support links

Technical specifications

For more information, visit HP support for product specific support links. Select your country or region. Click Product Support & Troubleshooting. Enter the name shown on the front of the printer, and then select Search. Click Product Information, and then select Product specifications..

System requirements

For information about software and system requirements or future operating system releases and support, visit the HP online support website at HP support for product specific support links.

Printer dimensions

Figure A-1 Dimensions for the printer

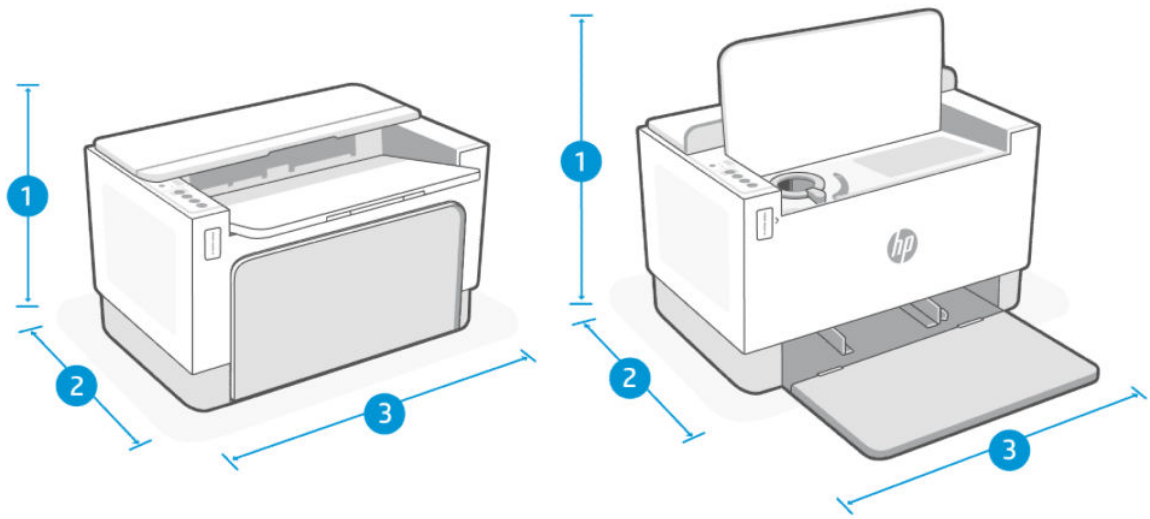

Table A-1

Measurement	Printer fully closed	Printer fully open
1. Height	214.8 mm (8.46 in)	362.80 mm (14.28 in)
2. Width	348.7 mm (13.73 in)	348.7 mm (13.73 in)
3. Depth	285 mm (11.22 in)	390.5 mm (15.37 in)
Weight (with 5k toner)	6.7 kg (14.74 lb)	

Power consumption, electrical specifications, and acoustic emissions

See HP support for product specific support links for current information.

⚠ CAUTION: Power requirements are based on the country/region where the printer is sold. Do not convert operating voltages. This will damage the printer and void the printer warranty.

Operating-environment range

Table A-2 Operating-environment range

Environment	Recommended	Allowed
Temperature	17.5° to 25°C (63.5° to 77°F)	15° to 32°C (59° to 90.5°F)
Operating humidity	30% to 70% relative humidity (RH), non-condensing	10% to 80% (RH), non-condensing
Relative humidity	20% to 70% relative humidity (RH), non-condensing	10% to 80% (RH), non-condensing
Altitude	Not applicable	0 to 3048 m (0 to 10,000 ft)

Warning icons

Warning icon definitions: The following warning icons may appear on HP products. Apply appropriate caution where applicable.

- Caution: Electric shock
- Caution: Hot surface
- Caution: Keep body parts away from moving parts
- Caution: Sharp edge in close proximity
- Warning

Laser Warning

CAUTION - CLASS 3B INVISIBLE LASER RADIATION WHEN OPEN. AVOID EXPOSURE TO THE BEAM.

ATTENTION - RAYONNEMENT LASER INVISIBLE DE CLASSE 3B EN CAS D'OUVERTURE. ÉVITEZ L'EXPOSITION AU FAISCEAU.

VORSICHT - UNSICHTBARE LASERSTRAHLUNG KLASSE 3B, WENN ABDECKUNG GEÖFFNET. NICHT DEM STRAHL AUSSETZEN.

PRECAUCIÓN – RADIACIÓN LÁSER INVISIBLE DE CLASE 3B PRESENTE AL ABRIR. EVITE LA EXPOSICIÓN AL HAZ.

VARNING - OSYNLIG LASERSTRÅLNING KLASS 3B VID ÖPPEN LUCKA UNDVIK EXPONERING FÖR LASERSTRÅLNINGEN.

VAROITUS - LUOKAN 3B NÄKYMÄTTÖMÄLLE LASER-SÄTEILYÄ AVATTUNA. VÄLTÄ ALTISTUMISTA SÄTEELLE.

注意 - 打开时，存在不可见的 3B 类激光辐射，请避免接触该激光束。

주 의 – 열리면 클래스 3B 비가시레이저방사선이방출됩니다 . 광선에 노출을 피하십시오 .

注意 – ここを開くとクラス 3B 不可視レーザ放射が出ます。ビームに身をさらさないこと。

B Service and support

This section describes the service and support information.

HP limited warranty statement

Table B-1 HP limited warranty statement

HP PRODUCT	DURATION OF LIMITED WARRANTY*
HP LaserJet Tank 1020, 150x, 250x series	One-year limited warranty

NOTE: *Warranty and support options vary by product, country, and local legal requirements. Go to www.support.hp.com to learn about HP award-winning service and support options in your region. For details on the HP limited warranty policy on supplies, go to www.hp.com/go/learnaboutsupplies

HP warrants to you, the end-user customer, this HP Limited Warranty applies only to HP branded products sold or leased a) from HP Inc., its subsidiaries, affiliates, authorized resellers, authorized distributors, or country distributors; and, b) with this HP Limited Warranty, that HP hardware and accessories will be free from defects in materials and workmanship after the date of purchase, for the period specified above. If HP receives notice of such defects during the warranty period, HP will, at its option, either repair or replace products which prove to be defective. Replacement products may be either new or equivalent in performance to new. HP products presented for repair may be replaced by refurbished goods of the same type rather than being repaired. Refurbished parts may be used to repair the goods. Repair of goods may result in lost user-generated data.

HP warrants to you that HP software will not fail to execute its programming instructions after the date of purchase, for the period specified above, due to defects in material and workmanship when properly installed and used. If HP receives notice of such defects during the warranty period, HP will replace software which does not execute its programming instructions due to such defects.

HP does not warrant that the operation of HP products will be uninterrupted or error free. If HP is unable, within a reasonable time, to repair or replace any product to a condition as warranted, you will be entitled to a refund of the purchase price upon prompt return of the product.

HP products may contain remanufactured parts equivalent to new in performance or may have been subject to incidental use.

Warranty does not apply to defects resulting from (a) improper or inadequate maintenance or calibration, (b) software, interfacing, parts or supplies not supplied by HP, (c) unauthorized modification or misuse, (d) operation outside of the published environmental specifications for the product, or (e) improper site preparation or maintenance.

TO THE EXTENT ALLOWED BY LOCAL LAW, THE ABOVE WARRANTIES ARE EXCLUSIVE AND NO OTHER WARRANTY OR CONDITION, WHETHER WRITTEN OR ORAL, IS EXPRESSED OR IMPLIED AND HP SPECIFICALLY DISCLAIMS ANY IMPLIED WARRANTIES OR CONDITIONS OF MERCHANTABILITY, SATISFACTORY QUALITY, AND FITNESS FOR A PARTICULAR PURPOSE. Some countries/regions, states or provinces do not allow limitations on the duration of an implied warranty, so the above limitation or exclusion might not apply to you. This warranty gives you specific legal rights and you might also have other rights that vary from country/region to country/region, state to state, or province to province. Please refer to the Country Specific statements at the end of this document.

HP's limited warranty is valid in any country/region or locality where HP has a support presence for this product and where HP has marketed this product. The level of warranty service you receive may vary according to local standards. HP will not alter form, fit or function of the product to make it operate in a country/region for which it was never intended to function for legal or regulatory reasons.

TO THE EXTENT ALLOWED BY LOCAL LAW, THE REMEDIES IN THIS WARRANTY STATEMENT ARE YOUR SOLE AND EXCLUSIVE REMEDIES. EXCEPT AS INDICATED ABOVE, IN NO EVENT WILL HP OR ITS SUPPLIERS BE LIABLE FOR LOSS OF DATA OR FOR DIRECT, SPECIAL, INCIDENTAL, CONSEQUENTIAL (INCLUDING LOST PROFIT OR DATA), OR OTHER DAMAGE, WHETHER BASED IN CONTRACT, TORT, OR OTHERWISE. Some countries/regions, states or provinces do not allow the exclusion or limitation of incidental or consequential damages, so the above limitation or exclusion may not apply to you.

THE WARRANTY TERMS CONTAINED IN THIS STATEMENT, EXCEPT TO THE EXTENT LAWFULLY PERMITTED, DO NOT EXCLUDE, RESTRICT OR MODIFY AND ARE IN ADDITION TO THE MANDATORY STATUTORY RIGHTS APPLICABLE TO THE SALE OF THIS PRODUCT TO YOU. PLEASE REFER TO THE COUNTRY SPECIFIC STATEMENTS AT THE END OF THIS DOCUMENT (IF APPLICABLE) FOR FURTHER INFORMATION ON YOUR CONSUMER RIGHTS.

Country Specific Terms

In some jurisdictions, you may have other statutory rights. Please see below.

Australia

Your rights as an Australian consumer are different to those stated in the document above.

You should disregard any limitations or exclusions in the above document and refer to the information below.

1. When you buy a good from HP as a consumer, the goods come with guarantees that cannot be excluded under the Australian Consumer Law. You are entitled to a replacement or refund for a major failure and for compensation for any other reasonably foreseeable loss or damage. You are also entitled to have the goods repaired or replaced if the goods fail to be of acceptable quality and the failure does not amount to a major failure.
2. This means that there is no defined warranty period for HP goods supplied to Australian consumers.
3. Instead, the goods should, for example, be fit for the purposes for which they are commonly supplied for such a period as a reasonable consumer fully acquainted with the state and condition of the goods would expect. This period may vary depending on the product.
4. You should contact HP if you are concerned that one of HP's products fails to satisfy any of the guarantees listed below. HP will discuss with you the specific nature and circumstances of that good and whether the particular fault/issue falls within the scope of the statutory guarantees.

   Nothing in HP's Limited Warranty excludes, restricts, or modifies any condition, warranty, guarantee, right or remedy you may have at law (including a consumer guarantee under the Australian Consumer Law) which cannot be lawfully excluded or limited.

The relevant guarantees are as follows:

1. Quality — goods supplied by HP must be of acceptable quality. The test for acceptable quality is whether a reasonable consumer, fully aware of the state and condition of the goods, would find them:
   - safe, durable, and free from defects;
   - acceptable in appearance and finish; and
   - fit for all the purposes for which goods of that kind are commonly supplied.

This must take into account the nature and price of the goods, and any statements on packaging or labeling.

2. **Disclosed Purpose** — goods or services supplied by HP that HP represents are reasonably fit for a purpose expressly disclosed by a consumer must be reasonably fit for that purpose.
3. **Description** — goods supplied by HP must match the description provided by HP.
4. **Sample** — goods supplied by HP must match any sample shown to you by HP.
5. **Title** — a consumer who purchases a good from HP must receive clear title to the good.
6. **Due care and skill** — services provided to you by HP must be provided with due care and skill.
7. **Express warranties** — HP will be legally required to comply with the express warranty that is set out in its terms and conditions.
8. **Reasonable time** — repair services provided by HP must be provided within a reasonable time.

If you think that you are entitled to any of the above remedies or any remedy under the HP Worldwide Limited Warranty and Technical Support Document, please contact HP:

HP PPS Australia Pty Ltd

Rhodes Corporate Park, Building F, Level 5

1 Homebush Bay Drive

Rhodes, NSW 2138

Australia

To initiate a support request, please use the numbers below or visit www.hp.com.au and select the “Customer Service” option for the most current list of phone support numbers.

Product	Phone
Support for all HP Products except those listed separately below	13 10 47 If dialing internationally: +61 2 8278-1039
DeskJet, Office Jet, PSC, All-in-One, Photosmart & Personal LaserJet Series 1000, P1000, M1000 and Colour LaserJet CP1000 Series and model CM1415	1300 721 147 If dialing internationally: +61 2 8934 4380

For further information on consumer rights, visit www.consumerlaw.gov.au and www.accc.gov.au/consumerguarantees.

New Zealand

In New Zealand, the hardware and software comes with guarantees that cannot be excluded under the New Zealand consumer law. In New Zealand, Consumer Transaction means a transaction involving a person who is purchasing goods for personal, domestic or household use or consumption and not for the purpose of a business. New Zealand consumers who are purchasing goods for personal, domestic or household use or consumption and not for the purpose of a business ("New Zealand Consumers") are entitled to repair, replacement or refund for a failure and compensation for other reasonably foreseeable loss or damage. A New Zealand Consumer (as defined above) may recover the costs of returning the product to the place of purchase if there is a breach of the New Zealand consumer law; furthermore, if it will be of significant cost to the New Zealand Consumer to return the goods to HP then HP will collect such goods at its own cost.

Product	Phone
Support for all HP Products except those listed separately below	0800 449 553 If dialing internationally: +61 2 8031-8317
DeskJet, Office Jet, PSC, All-in-One, Photosmart & Personal LaserJet Series 1000, P1000, M1000 and Colour LaserJet CP1000 Series and model CM1415	0800 441 147 If dialing internationally: +61 2 8934 4380

UK, Ireland, and Malta

The HP Limited Warranty is a commercial guarantee voluntarily provided by HP. The name and address of the HP entity responsible for the performance of the HP Limited Warranty in your country/region is as follows:

UK: HP Inc UK Limited, Cain Road, Amen Corner, Bracknell, Berkshire, RG12 1HN

Ireland: Hewlett-Packard Ireland Limited, Liffey Park Technology Campus, Barnhall Road, Leixlip, Co.Kildare

Malta: Hewlett-Packard Europe B.V., Amsterdam, Meyrin Branch, Route du Nant-d'Avril 150, 1217 Meyrin, Switzerland

United Kingdom: The HP Limited Warranty benefits apply in addition to any legal rights to a guarantee from seller of nonconformity of goods with the contract of sale. These rights expire six years from delivery of goods for products purchased in England or Wales and five years from delivery of goods for products purchased in Scotland. However various factors may impact your eligibility to receive these rights. For further information, please consult the following link: Consumer Legal Guarantee (https://www.hp.com/go/eu-legal) or you may visit the European Consumer Centers website (ec.europa.eu/info/live-work-travel-eu/consumers/resolve-your-consumer-complaint/european-consumer-centres-network-ecc-net_en). Consumers have the right to choose whether to claim service under the HP Limited Warranty or against the seller under the legal guarantee.

Ireland: The HP Limited Warranty benefits apply in addition to any statutory rights from seller in relation to nonconformity of goods with the contract of sale. However various factors may impact your eligibility to receive these rights. Consumer statutory rights are not limited or affected in any manner by HP Care Pack. For further information, please consult the following link: Consumer Legal Guarantee (https://www.hp.com/go/eu-legal) or you may visit the European Consumer Centers website (ec.europa.eu/info/live-work-travel-eu/consumers/resolve-your-consumer-complaint/european-consumer-centres-network-ecc-net_en). Consumers have the right to choose whether to claim service under the HP Limited Warranty or against the seller under the legal guarantee.

Malta: The HP Limited Warranty benefits apply in addition to any legal rights to a two-year guarantee from seller of nonconformity of goods with the contract of sale; however various factors may impact your eligibility to receive these rights. Consumer statutory rights are not limited or affected in any manner by the HP Limited Warranty. For further information, please consult the following link: Consumer Legal Guarantee (https://www.hp.com/go/eu-legal) or you may visit the European Consumer Centers website (ec.europa.eu/info/live-work-travel-eu/consumers/resolve-your-consumer-complaint/european-consumer-centres-network-ecc-net_en). Consumers have the right to choose whether to claim service under the HP Limited Warranty or against the seller under two-year legal guarantee.

Austria, Belgium, Germany, and Luxemburg

Die beschränkte HP Herstellergarantie ist eine von HP auf freiwilliger Basis angebotene kommerzielle Garantie. Der Name und die Adresse der HP Gesellschaft, die in Ihrem Land für die Gewährung der beschränkten HP Herstellergarantie verantwortlich ist, sind wie folgt:

Deutschland: HP Deutschland GmbH, Schickardstr. 32, D-71034 Böblingen

Österreich: HP Austria GmbH., Technologiestrasse 5, A-1120 Wien

Luxemburg: Hewlett-Packard Luxembourg S.C.A., 75, Parc d'Activités Capellen, Rue Pafebruc, L-8308 Capellen

Belgien: HP Belgium BVBA, Hermeslaan 1A, B-1831 Diegem

Die Rechte aus der beschränkten HP Herstellergarantie gelten zusätzlich zu den gesetzlichen Ansprüchen wegen Sachmängeln auf eine zweijährige Gewährleistung ab dem Lieferdatum. Ob Sie Anspruch auf diese Rechte haben, hängt von zahlreichen Faktoren ab. Die Rechte des Kunden sind in keiner Weise durch die beschränkte HP Herstellergarantie eingeschränkt bzw. betroffen. Weitere Hinweise finden Sie auf der folgenden Website: Gewährleistungsansprüche für Verbraucher (www.hp.com/go/eu-legal) oder Sie können die Website des Europäischen Verbraucherzentrums (http://ec.europa.eu/consumers/solving_consumer_disputes/non-judicial_redress/ecc-net/index_en.htm) besuchen. Verbraucher haben das Recht zu wählen, ob sie eine Leistung von HP gemäß der beschränkten HP Herstellergarantie in Anspruch nehmen oder ob sie sich gemäß der gesetzlichen zweijährigen Haftung für Sachmängel (Gewährleistung) sich an den jeweiligen Verkäufer wenden.

Belgium, France, and Luxemburg

La garantie limitée HP est une garantie commerciale fournie volontairement par HP. Voici les coordonnées de l'entité HP responsable de l'exécution de la garantie limitée HP dans votre pays:

France: HP France SAS, société par actions simplifiée identifiée sous le numéro 448 694 133 RCS Evry, 1 Avenue du Canada, 91947, Les Ulis

G.D. Luxembourg: Hewlett-Packard Luxembourg S.C.A., 75, Parc d'Activités Capellen, Rue Pafebruc, L-8308 Capellen

Belgique: HP Belgium BVBA, Hermeslaan 1A, B-1831 Diegem

France: Les avantages de la garantie limitée HP s'appliquent en complément des droits dont vous disposez au titre des garanties légales applicables dont le bénéfice est soumis à des conditions spécifiques. Vos droits en tant que consommateur au titre de la garantie légale de conformité mentionnée aux articles L. 211-4 à L. 211-13 du Code de la Consommation et de celle relatives aux défauts de la chose vendue, dans les conditions prévues aux articles 1641 à 1648 et 2232 du Code de Commerce ne sont en aucune façon limités ou affectés par la garantie limitée HP. Pour de plus amples informations, veuillez consulter le lien suivant : Garanties légales accordées au consommateur (www.hp.com/go/eu-legal). Vous pouvez également consulter le site Web des Centres européens des consommateurs (http://ec.europa.eu/consumers/solving_consumer_disputes/non-judicial_redress/ecc-net/index_en.htm). Les consommateurs ont le droit de choisir d'exercer leurs droits au titre de la garantie limitée HP, ou auprès du vendeur au titre des garanties légales applicables mentionnées ci-dessus.

POUR RAPPEL:

Garantie Légale de Conformité:

« Le vendeur est tenu de livrer un bien conforme au contrat et répond des défauts de conformité existant lors de la délivrance.

Il répond également des défauts de conformité résultant de l'emballage, des instructions de montage ou de l'installation lorsque celle-ci a été mise à sa charge par le contrat ou a été réalisée sous sa responsabilité ».

Article L211-5 du Code de la Consommation:

« Pour être conforme au contrat, le bien doit:

1° Etre propre à l'usage habituellement attendu d'un bien semblable et, le cas échéant:

- correspondre à la description donnée par le vendeur et posséder les qualités que celui-ci a présentées à l'acheteur sous forme d'échantillon ou de modèle;

- présenter les qualités qu'un acheteur peut légitimement attendre eu égard aux déclarations publiques faites par le vendeur, par le producteur ou par son représentant, notamment dans la publicité ou l'étiquetage;

2° Ou présenter les caractéristiques définies d'un commun accord par les parties ou être propre à tout usage spécial recherché par l'acheteur, porté à la connaissance du vendeur et que ce dernier a accepté ».

Article L211-12 du Code de la Consommation:

« L'action résultant du défaut de conformité se prescrit par deux ans à compter de la délivrance du bien ».

Garantie des vices cachés

Article 1641 du Code Civil : *« Le vendeur est tenu de la garantie à raison des défauts cachés de la chose vendue qui la rendent impropre à l'usage auquel on la destine, ou qui diminuent tellement cet usage que l'acheteur ne l'aurait pas acquise, ou n'en aurait donné qu'un moindre prix, s'il les avait connus. »*

Article 1648 alinéa 1 du Code Civil:

« L'action résultant des vices rédhibitoires doit être intentée par l'acquéreur dans un délai de deux ans à compter de la découverte du vice. »

G.D. Luxembourg et Belgique: Les avantages de la garantie limitée HP s'appliquent en complément des droits dont vous disposez au titre de la garantie de non-conformité des biens avec le contrat de vente. Cependant, de nombreux facteurs peuvent avoir un impact sur le bénéfice de ces droits. Vos droits en tant que consommateur au titre de ces garanties ne sont en aucune façon limités ou affectés par la garantie limitée HP. Pour de plus amples informations, veuillez consulter le lien suivant: Garanties légales accordées au consommateur (www.hp.com/go/eu-legal) ou vous pouvez également consulter le site Web des Centres européens des consommateurs (http://ec.europa.eu/consumers/solving_consumer_disputes/non-judicial_redress/ecc-net/index_en.htm). Les consommateurs ont le droit de choisir de réclamer un service sous la garantie limitée HP ou auprès du vendeur au cours d'une garantie légale de deux ans.

Italy

La Garanzia limitata HP è una garanzia commerciale fornita volontariamente da HP. Di seguito sono indicati nome e indirizzo della società HP responsabile della fornitura dei servizi coperti dalla Garanzia limitata HP nel vostro Paese:

Italia: HP Italy S.r.l., Via Carlo Donat Cattin,5 20063 Cernusco S/Naviglio

I vantaggi della Garanzia limitata HP vengono concessi ai consumatori in aggiunta ai diritti derivanti dalla garanzia di due anni fornita dal venditore in caso di non conformità dei beni rispetto al contratto di vendita. Tuttavia, diversi fattori possono avere un impatto sulla possibilita' di beneficiare di tali diritti. I diritti spettanti ai consumatori in forza della garanzia legale non sono in alcun modo limitati, né modificati dalla Garanzia limitata HP. Per ulteriori informazioni, si prega di consultare il seguente link: Garanzia legale per i clienti (www.hp.com/go/eu-legal), oppure visitare il sito Web dei Centri europei per i consumatori (http://ec.europa.eu/consumers/solving_consumer_disputes/non-judicial_redress/ecc-net/index_en.htm). I consumatori hanno il diritto di scegliere se richiedere un servizio usufruendo della Garanzia limitata HP oppure rivolgendosi al venditore per far valere la garanzia legale di due anni.

Spain

Su Garantía limitada de HP es una garantía comercial voluntariamente proporcionada por HP. El nombre y dirección de las entidades HP que proporcionan la Garantía limitada de HP (garantía comercial adicional del fabricante) en su país es:

España: Hewlett-Packard Española S.L. Calle Vicente Aleixandre, 1 Parque Empresarial Madrid - Las Rozas, E-28232 Madrid

Los beneficios de la Garantía limitada de HP son adicionales a la garantía legal de 2 años a la que los consumidores tienen derecho a recibir del vendedor en virtud del contrato de compraventa; sin embargo, varios factores pueden afectar su derecho a recibir los beneficios bajo dicha garantía legal. A este respecto, la Garantía limitada de HP no limita o afecta en modo alguno los derechos legales del consumidor (https://www.hp.com/go/eu-legal). Para más información, consulte el siguiente enlace: Garantía legal del consumidor o puede visitar el sitio web de los Centros europeos de los consumidores (ec.europa.eu/info/live-work-travel-eu/consumers/resolve-your-consumer-complaint/european-consumer-centres-network-ecc-net_en). Los clientes tienen derecho a elegir si reclaman un servicio acogiéndose a la Garantía limitada de HP o al vendedor de conformidad con la garantía legal de dos años.

Denmark

Den begrænsede HP-garanti er en garanti, der ydes frivilligt af HP. Navn og adresse på det HP-selskab, der er ansvarligt for HP's begrænsede garanti i dit land, er som følger:

Danmark: HP Inc Danmark ApS, Engholm Parkvej 8, 3450, Allerød

Den begrænsede HP-garanti gælder i tillæg til eventuelle juridiske rettigheder, for en toårig garanti fra sælgeren af varer, der ikke er i overensstemmelse med salgsaftalen, men forskellige faktorer kan dog påvirke din ret til at opnå disse rettigheder. Forbrugerens lovbestemte rettigheder begrænses eller påvirkes ikke på nogen måde af den begrænsede HP-garanti. Se nedenstående link for at få yderligere oplysninger: Forbrugerens juridiske garanti (www.hp.com/go/eu-legal) eller du kan besøge De Europæiske Forbrugercentres websted (http://ec.europa.eu/consumers/solving_consumer_disputes/non-judicial_redress/ecc-net/index_en.htm). Forbrugere har ret til at vælge, om de vil gøre krav på service i henhold til HP's begrænsede garanti eller hos sælger i henhold til en toårig juridisk garanti.

Norway

HPs garanti er en begrenset og kommersiell garanti som HP selv har valgt å tilby. Følgende lokale selskap innestår for garantien:

Norge: HP Norge AS, Rolfbuktveien 4b, 1364 Fornebu

HPs garanti kommer i tillegg til det mangelsansvar HP har i henhold til norsk forbrukerkjøpslovgivning, hvor reklamasjonsperioden kan være to eller fem år, avhengig av hvor lenge salgsgjenstanden var ment å vare. Ulike faktorer kan imidlertid ha betydning for om du kvalifiserer til å kreve avhjelp iht slikt mangelsansvar. Forbrukerens lovmessige rettigheter begrenses ikke av HPs garanti. Hvis du vil ha mer informasjon, kan du klikke på følgende kobling: Juridisk garanti for forbruker (https://www.hp.com/go/eu-legal) eller du kan besøke nettstedet til de europeiske forbrukersentrene (ec.europa.eu/info/live-work-travel-eu/consumers/resolve-your-consumer-complaint/european-consumer-centres-network-ecc-net_en). Forbrukere har retten til å velge å kreve service under HPs garanti eller iht selgerens lovpålagte mangelsansvar.

Sweden

HP:s begränsade garanti är en kommersiell garanti som tillhandahålls frivilligt av HP. Namn och adress till det HP-företag som ansvarar för HP:s begränsade garanti i ditt land är som följer:

Sverige: HP PPS Sverige AB, SE-169 73 Stockholm

Fördelarna som ingår i HP:s begränsade garanti gäller utöver de lagstadgade rättigheterna till tre års garanti från säljaren angående varans bristande överensstämmelse gentemot köpeavtalet, men olika faktorer kan påverka din rätt att utnyttja dessa rättigheter. Konsumentens lagstadgade rättigheter varken begränsas eller påverkas på något sätt av HP:s begränsade garanti. Mer information får du om du följer denna länk: Lagstadgad garanti för konsumenter (https://www.hp.com/go/eu-legal) eller så kan du gå till European Consumer Centers webbplats (ec.europa.eu/info/live-work-travel-eu/consumers/resolve-your-consumer-complaint/european-consumer-centres-network-ecc-net_en). Konsumenter har rätt att välja om de vill ställa krav enligt HP:s begränsade garanti eller på säljaren enligt den lagstadgade treåriga garantin.

Portugal

A Garantia Limitada HP é uma garantia comercial fornecida voluntariamente pela HP. O nome e a morada da entidade HP responsável pela prestação da Garantia Limitada HP no seu país são os seguintes:

Portugal: HPCP – Computing and Printing Portugal, Unipessoal, Lda., Edificio D. Sancho I, Quinta da Fonte, Porto Salvo, Lisboa, Oeiras, 2740 244

As vantagens da Garantia Limitada HP aplicam-se cumulativamente com quaisquer direitos decorrentes da legislação aplicável à garantia de dois anos do vendedor, relativa a defeitos do produto e constante do contrato de venda. Existem, contudo, vários fatores que poderão afetar a sua elegibilidade para beneficiar de tais direitos. Os direitos legalmente atribuídos aos consumidores não são limitados ou afetados de forma alguma pela Garantia Limitada HP. Para mais informações, consulte a ligação seguinte: Garantia legal do consumidor (www.hp.com/go/eu-legal) ou visite o Web site da Rede dos Centros Europeus do Consumidor (http://ec.europa.eu/consumers/solving_consumer_disputes/non-judicial_redress/ecc-net/index_en.htm). Os consumidores têm o direito de escolher se pretendem reclamar assistência ao abrigo da Garantia Limitada HP ou contra o vendedor ao abrigo de uma garantia jurídica de dois anos.

Greece and Cyprus

Η Περιορισμένη εγγύηση HP είναι μια εμπορική εγγύηση η οποία παρέχεται εθελοντικά από την HP. Η επωνυμία και η διεύθυνση του νομικού προσώπου HP που παρέχει την Περιορισμένη εγγύηση HP στη χώρα σας είναι η εξής:

Ελλάδα /Κύπρος: HP Printing and Personal Systems Hellas EPE, Tzavella 1-3, 15232 Chalandri, Attiki

Ελλάδα /Κύπρος: HP Συστήματα Εκτύπωσης και Προσωπικών Υπολογιστών Ελλάς Εταιρεία Περιορισμένης Ευθύνης, Tzavella 1-3, 15232 Chalandri, Attiki

Τα προνόμια της Περιορισμένης εγγύησης HP ισχύουν επιπλέον των νόμιμων δικαιωμάτων για διετή εγγύηση έναντι του Πωλητή για τη μη συμμόρφωση των προϊόντων με τις συνομολογημένες συμβατικά ιδιότητες, ωστόσο η άσκηση των δικαιωμάτων σας αυτών μπορεί να εξαρτάται από διάφορους παράγοντες. Τα νόμιμα δικαιώματα των καταναλωτών δεν περιορίζονται ούτε επηρεάζονται καθ' οιονδήποτε τρόπο από την Περιορισμένη εγγύηση HP. Για περισσότερες πληροφορίες, συμβουλευτείτε την ακόλουθη τοποθεσία web: Νόμιμη εγγύηση καταναλωτή (www.hp.com/go/eu-legal) ή μπορείτε να επισκεφτείτε την τοποθεσία web των Ευρωπαϊκών Κέντρων Καταναλωτή (http://ec.europa.eu/consumers/solving_consumer_disputes/non-judicial_redress/ecc-net/index_en.htm). Οι καταναλωτές έχουν το δικαίωμα να επιλέξουν αν θα αξιώσουν την υπηρεσία στα πλαίσια της Περιορισμένης εγγύησης HP ή από τον πωλητή στα πλαίσια της νόμιμης εγγύησης δύο ετών.

Hungary

A HP korlátozott jótállás egy olyan kereskedelmi jótállás, amelyet a HP a saját elhatározásából biztosít. Az egyes országokban a HP mint gyártó által vállalt korlátozott jótállást biztosító HP vállalatok neve és címe:

Magyarország: HP Inc Magyarország Kft., H-1117 Budapest, Alíz utca 1.

A HP korlátozott jótállásban biztosított jogok azokon a jogokon felül illetik meg Önt, amelyek a termékeknek az adásvételi szerződés szerinti minőségére vonatkozó kétéves, jogszabályban foglalt eladói szavatosságból, továbbá ha az Ön által vásárolt termékre alkalmazandó, a jogszabályban foglalt kötelező eladói jótállásból erednek, azonban számos körülmény hatással lehet arra, hogy ezek a jogok Önt megilletik-e. További információért kérjük, keresse fel a következő webhelyet: Jogi Tájékoztató Fogyasztóknak (www.hp.com/go/eu-legal) vagy látogassa meg az Európai Fogyasztói Központok webhelyét (http://ec.europa.eu/consumers/solving_consumer_disputes/non-judicial_redress/ecc-net/index_en.htm). A fogyasztóknak jogában áll, hogy megválasszák, hogy a jótállással kapcsolatos igényüket a HP korlátozott jótállás alapján vagy a kétéves, jogszabályban foglalt eladói szavatosság, illetve, ha alkalmazandó, a jogszabályban foglalt kötelező eladói jótállás alapján érvényesítik.

Czech Republic

Omezená záruka HP je obchodní zárukou dobrovolně poskytovanou společností HP. Názvy a adresy společností skupiny HP, které odpovídají za plnění omezené záruky HP ve vaší zemi, jsou následující:

Česká republika: HP Inc Czech Republic s. r. o., Za Brumlovkou 5/1559, 140 00 Praha 4

Výhody, poskytované omezenou zárukou HP, se uplatňuji jako doplňek k jakýmkoli právním nárokům na dvouletou záruku poskytnutou prodejcem v případě nesouladu zboží s kupní smlouvou. Váš nárok na uznání těchto práv však může záviset na mnohých faktorech. Omezená záruka HP žádným způsobem neomezuje ani neovlivňuje zákonná práva zákazníka. Další informace získáte kliknutím na následující odkaz: Zákonná záruka spotřebitele (www.hp.com/go/eu-legal) případně můžete navštívit webové stránky Evropského spotřebitelského centra (http://ec.europa.eu/consumers/solving_consumer_disputes/non-judicial_redress/ecc-net/index_en.htm). Spotřebitelé mají právo se rozhodnout, zda chtějí službu reklamovat v rámci omezené záruky HP nebo v rámci zákonem stanovené dvouleté záruky u prodejce.

Slovakia

Obmedzená záruka HP je obchodná záruka, ktorú spoločnosť HP poskytuje dobrovoľne. Meno a adresa subjektu HP, ktorý zabezpečuje plnenie vyplývajúce z Obmedzenej záruky HP vo vašej krajine:

Slovenská republika: HP Inc Slovakia, s.r.o., Galvaniho 7, 821 04 Bratislava

Výhody Obmedzenej záruky HP sa uplatnia vedľa prípadných zákazníkových zákonných nárokov voči predávajúcemu z vád, ktoré spočívajú v nesúlade vlastností tovaru s jeho popisom podľa predmetnej zmluvy. Možnosť uplatnenia takých prípadných nárokov však môže závisieť od rôznych faktorov. Služby Obmedzenej záruky HP žiadnym spôsobom neobmedzujú ani neovplyvňujú zákonné práva zákazníka, ktorý je spotrebiteľom. Ďalšie informácie nájdete na nasledujúcom prepojení: Zákonná záruka spotrebiteľa (www.hp.com/go/eu-legal), prípadne môžete navštíviť webovú lokalitu európskych zákazníckych stredísk (http://ec.europa.eu/consumers/solving_consumer_disputes/non-judicial_redress/ecc-net/index_en.htm). Spotrebitelia majú právo zvoliť si, či chcú uplatniť servis v rámci Obmedzenej záruky HP alebo počas zákonnej dvojročnej záručnej lehoty u predajcu.

Poland

Ograniczona gwarancja HP to komercyjna gwarancja udzielona dobrowolnie przez HP. Nazwa i adres podmiotu HP odpowiedzialnego za realizację Ograniczonej gwarancji HP w Polsce:

Polska: HP Inc Polska sp. z o.o., Szturmowa 2a, 02-678 Warszawa, wpisana do rejestru przedsiębiorców prowadzonego przez Sąd Rejonowy dla m.st. Warszawy w Warszawie, XIII Wydział Gospodarczy Krajowego Rejestru Sądowego, pod numerem KRS 0000546115, NIP 5213690563, REGON 360916326, GIOŚ E0020757WZBW, kapitał zakładowy 480.000 PLN.

Świadczenia wynikające z Ograniczonej gwarancji HP stanowią dodatek do praw przysługujących nabywcy w związku z dwuletnią odpowiedzialnością sprzedawcy z tytułu niezgodności towaru z umową (rękojmia). Niemniej, na możliwość korzystania z tych praw mają wpływ różne czynniki. Ograniczona gwarancja HP w żaden sposób nie ogranicza praw konsumenta ani na nie nie wpływa. Więcej informacji można znaleźć pod następującym łączem: Gwarancja prawna konsumenta (www.hp.com/go/eu-legal), można także odwiedzić stronę internetową Europejskiego Centrum Konsumenckiego (http://ec.europa.eu/consumers/solving_consumer_disputes/non-judicial_redress/ecc-net/index_en.htm). Konsumenci mają prawo wyboru co do możliwosci skorzystania albo z usług gwarancyjnych przysługujących w ramach Ograniczonej gwarancji HP albo z uprawnień wynikających z dwuletniej rękojmi w stosunku do sprzedawcy.

Bulgaria

Ограничената гаранция на HP представлява търговска гаранция, доброволно предоставяна от HP. Името и адресът на дружеството на HP за вашата страна, отговорно за предоставянето на гаранционната поддръжка в рамките на Ограничената гаранция на HP, са както следва:

HP Inc Bulgaria EOOD (Ейч Пи Инк България ЕООД), гр. София 1766, район р-н Младост, бул. Околовръстен Път No 258, Бизнес Център Камбаните

Предимствата на Ограничената гаранция на HP се прилагат в допълнение към всички законови права за двугодишна гаранция от продавача при несъответствие на стоката с договора за продажба. Въпреки това, различни фактори могат да окажат влияние върху условията за получаване на тези права. Законовите права на потребителите не са ограничени или засегнати по никакъв начин от Ограничената гаранция на HP. За допълнителна информация, моля вижте Правната гаранция на потребителя (www.hp.com/go/eu-legal) или посетете уебсайта на Европейския потребителски център (http://ec.europa.eu/consumers/solving_consumer_disputes/non-judicial_redress/ecc-net/index_en.htm). Потребителите имат правото да избират дали да претендират за извършване на услуга в рамките на Ограничената гаранция на HP или да потърсят такава от търговеца в рамките на двугодишната правна гаранция.

Romania

Garanția limitată HP este o garanție comercială furnizată în mod voluntar de către HP. Numele și adresa entității HP răspunzătoare de punerea în aplicare a Garanției limitate HP în țara dumneavoastră sunt următoarele:

România: HP Inc Romania SRL, 5 Fabrica de Glucoza Str., Building F, Ground Floor and Floor 8, 2nd District, Bucureşti

Beneficiile Garanției limitate HP se aplică suplimentar faţă de orice drepturi privind garanţia de doi ani oferită de vânzător pentru neconformitatea bunurilor cu contractul de vânzare; cu toate acestea, diverşi factori pot avea impact asupra eligibilităţii dvs. de a beneficia de aceste drepturi. Drepturile legale ale consumatorului nu sunt limitate sau afectate în vreun fel de Garanția limitată HP. Pentru informaţii suplimentare consultaţi următorul link: garanția acordată consumatorului prin lege (www.hp.com/go/eu-legal) sau puteți accesa site-ul Centrul European al Consumatorilor (http://ec.europa.eu/consumers/solving_consumer_disputes/non-judicial_redress/ecc-net/index_en.htm). Consumatorii au dreptul să aleagă dacă să pretindă despăgubiri în cadrul Garanței limitate HP sau de la vânzător, în cadrul garanției legale de doi ani.

Belgium and the Netherlands

De Beperkte Garantie van HP is een commerciële garantie vrijwillig verstrekt door HP. De naam en het adres van de HP-entiteit die verantwoordelijk is voor het uitvoeren van de Beperkte Garantie van HP in uw land is als volgt:

Nederland: HP Nederland B.V., Startbaan 16, 1187 XR Amstelveen

België: HP Belgium BVBA, Hermeslaan 1A, B-1831 Diegem

De voordelen van de Beperkte Garantie van HP vormen een aanvulling op de wettelijke garantie voor consumenten gedurende twee jaren na de levering te verlenen door de verkoper bij een gebrek aan conformiteit van de goederen met de relevante verkoopsovereenkomst. Niettemin kunnen diverse factoren een impact hebben op uw eventuele aanspraak op deze wettelijke rechten. De wettelijke rechten van de consument worden op geen enkele wijze beperkt of beïnvloed door de Beperkte Garantie van HP. Raadpleeg voor meer informatie de volgende webpagina: Wettelijke garantie van de consument (www.hp.com/go/eu-legal) of u kan de website van het Europees Consumenten Centrum bezoeken (http://ec.europa.eu/consumers/solving_consumer_disputes/non-judicial_redress/ecc-net/index_en.htm). Consumenten hebben het recht om te kiezen tussen enerzijds de Beperkte Garantie van HP of anderzijds het aanspreken van de verkoper in toepassing van de wettelijke garantie.

Finland

HP:n rajoitettu takuu on HP:n vapaaehtoisesti antama kaupallinen takuu. HP:n myöntämästä takuusta maassanne vastaavan HP:n edustajan yhteystiedot ovat:

Suomi: HP Finland Oy, Piispankalliontie, FIN - 02200 Espoo

HP:n takuun edut ovat voimassa mahdollisten kuluttajansuojalakiin perustuvien oikeuksien lisäksi sen varalta, että tuote ei vastaa myyntisopimusta. Saat lisätietoja seuraavasta linkistä: Kuluttajansuoja (www.hp.com/go/eu-legal) tai voit käydä Euroopan kuluttajakeskuksen sivustolla (http://ec.europa.eu/consumers/solving_consumer_disputes/non-judicial_redress/ecc-net/index_en.htm). Kuluttajilla on oikeus vaatia virheen korjausta HP:n takuun ja kuluttajansuojan perusteella HP:lta tai myyjältä.

Slovenia

Omejena garancija HP je prostovoljna trgovska garancija, ki jo zagotavlja podjetje HP. Ime in naslov poslovne enote HP, ki je odgovorna za omejeno garancijo HP v vaši državi, sta naslednja:

Slovenija: Hewlett-Packard Europe B.V., Amsterdam, Meyrin Branch, Route du Nant-d'Avril 150, 1217 Meyrin, Switzerland

Ugodnosti omejene garancije HP veljajo poleg zakonskih pravic, ki ob sklenitvi kupoprodajne pogodbe izhajajo iz dveletne garancije prodajalca v primeru neskladnosti blaga, vendar lahko na izpolnjevanje pogojev za uveljavitev pravic vplivajo različni dejavniki. Omejena garancija HP nikakor ne omejuje strankinih z zakonom predpisanih pravic in ne vpliva nanje. Za dodatne informacije glejte naslednjo povezavo: Strankino pravno jamstvo (www.hp.com/go/eu-legal); ali pa obiščite spletno mesto evropskih središč za potrošnike (http://ec.europa.eu/consumers/solving_consumer_disputes/non-judicial_redress/ecc-net/index_en.htm). Potrošniki imajo pravico izbrati, ali bodo uveljavljali pravice do storitev v skladu z omejeno garancijo HP ali proti prodajalcu v skladu z dvoletno zakonsko garancijo.

Croatia

HP ograničeno jamstvo komercijalno je dobrovoljno jamstvo koje pruža HP. Ime i adresa HP subjekta odgovornog za HP ograničeno jamstvo u vašoj državi:

Hrvatska: HP Computing and Printing d.o.o. za računalne i srodne aktivnosti, Radnička cesta 41, 10000 Zagreb

Pogodnosti HP ograničenog jamstva vrijede zajedno uz sva zakonska prava na dvogodišnje jamstvo kod bilo kojeg prodavača s obzirom na nepodudaranje robe s ugovorom o kupnji. Međutim, razni faktori mogu utjecati na vašu mogućnost ostvarivanja tih prava. HP ograničeno jamstvo ni na koji način ne utječe niti ne ograničava zakonska prava potrošača. Dodatne informacije potražite na ovoj adresi: Zakonsko jamstvo za potrošače (www.hp.com/go/eu-legal) ili možete posjetiti web-mjesto Europskih potrošačkih centara (http://ec.europa.eu/consumers/solving_consumer_disputes/non-judicial_redress/ecc-net/index_en.htm). Potrošači imaju pravo odabrati žele li ostvariti svoja potraživanja u sklopu HP ograničenog jamstva ili pravnog jamstva prodavača u trajanju ispod dvije godine.

Latvia

HP ierobežotā garantija ir komercgarantija, kuru brīvprātīgi nodrošina HP. HP uzņēmums, kas sniedz HP ierobežotās garantijas servisa nodrošinājumu jūsu valstī:

Latvija: HP Finland Oy, PO Box 515, 02201 Espoo, Finland

HP ierobežotās garantijas priekšrocības tiek piedāvātas papildus jebkurām likumīgajām tiesībām uz pārdevēja un/vai ražotāju nodrošinātu divu gadu garantiju gadījumā, ja preces neatbilst pirkuma līgumam, tomēr šo tiesību saņemšanu var ietekmēt vairāki faktori. HP ierobežotā garantija nekādā veidā neierobežo un neietekmē patērētāju likumīgās tiesības. Lai iegūtu plašāku informāciju, izmantojiet šo saiti: Patērētāju likumīgā garantija (www.hp.com/go/eu-legal) vai arī Eiropas Patērētāju tiesību aizsardzības centra tīmekļa vietni (http://ec.europa.eu/consumers/solving_consumer_disputes/non-judicial_redress/ecc-net/index_en.htm). Patērētājiem ir tiesības izvēlēties, vai pieprasīt servisa nodrošinājumu saskaņā ar HP ierobežoto garantiju, vai arī pārdevēja sniegto divu gadu garantiju.

Lithuania

HP ribotoji garantija yra HP savanoriškai teikiama komercinė garantija. Toliau pateikiami HP bendrovių, teikiančių HP garantiją (gamintojo garantiją) jūsų šalyje, pavadinimai ir adresai:

Lietuva: HP Finland Oy, PO Box 515, 02201 Espoo, Finland

HP ribotoji garantija papildomai taikoma kartu su bet kokiomis kitomis įstatymais nustatytomis teisėmis į pardavėjo suteikiamą dviejų metų laikotarpio garantiją dėl prekių atitikties pardavimo sutarčiai, tačiau tai, ar jums ši teisė bus suteikiama, gali priklausyti nuo įvairių aplinkybių. HP ribotoji garantija niekaip neapriboja ir neįtakoja įstatymais nustatytų vartotojo teisių. Daugiau informacijos rasite paspaudę šią nuorodą: Teisinė vartotojo garantija (www.hp.com/go/eu-legal) arba apsilankę Europos vartotojų centro internetinėje svetainėje (http://ec.europa.eu/consumers/solving_consumer_disputes/non-judicial_redress/ecc-net/index_en.htm). Vartotojai turi teisę prašyti atlikti techninį aptarnavimą pagal HP ribotąją garantiją arba pardavėjo teikiamą dviejų metų įstatymais nustatytą garantiją.

Estonia

HP piiratud garantii on HP poolt vabatahtlikult pakutav kaubanduslik garantii. HP piiratud garantii eest vastutab HP üksus aadressil:

Eesti: HP Finland Oy, PO Box 515, 02201 Espoo, Finland

HP piiratud garantii rakendub lisaks seaduses ettenähtud müüjapoolsele kaheaastasele garantiile, juhul kui toode ei vasta müügilepingu tingimustele. Siiski võib esineda asjaolusid, mille puhul teie jaoks need õigused ei pruugi kehtida. HP piiratud garantii ei piira ega mõjuta mingil moel tarbija seadusjärgseid õigusi. Lisateavet leiate järgmiselt lingilt: tarbija õiguslik garantii (www.hp.com/go/eu-legal) või võite külastada Euroopa tarbijakeskuste veebisaiti (http://ec.europa.eu/consumers/solving_consumer_disputes/non-judicial_redress/ecc-net/index_en.htm). Tarbijal on õigus valida, kas ta soovib kasutada HP piiratud garantiid või seadusega ette nähtud müüjapoolset kaheaastast garantiid.

Russia

Срок службы принтера для России

Срок службы данного принтера HP составляет пять лет в нормальных условиях эксплуатации. Срок службы отсчитывается с момента ввода принтера в эксплуатацию. В конце срока службы HP рекомендует посетить веб-сайт нашей службы поддержки по адресу www.hp.com/support и/или связаться с авторизованным поставщиком услуг HP для получения рекомендаций в отношении дальнейшего безопасного использования принтера.

HP's Premium Protection Warranty: HP LaserJet Tank Toner Reload Kit and HP Laser Imaging Drum limited warranty statement

This HP product is warranted to be free from defects in materials and workmanship.

This warranty does not apply to products that (a) have been refilled, refurbished, remanufactured or tampered with in any way, except for the use of an Toner Reload Kit as specified in the printer manual, (b) experience problems resulting from misuse, improper storage, or operation outside of the published environmental specifications for the printer product or (c) exhibit wear from ordinary use.

To obtain warranty service, please return the product to place of purchase (with a written description of the problem and print samples) or contact HP customer support. At HP's option, except where provided otherwise by local law, HP will either replace products that prove to be defective or refund your purchase price.

TO THE EXTENT ALLOWED BY LOCAL LAW, THE ABOVE WARRANTY IS EXCLUSIVE AND NO OTHER WARRANTY OR CONDITION, WHETHER WRITTEN OR ORAL, IS EXPRESSED OR IMPLIED AND HP SPECIFICALLY DISCLAIMS ANY IMPLIED WARRANTIES OR CONDITIONS OF MERCHANTABILITY, SATISFACTORY QUALITY, AND FITNESS FOR A PARTICULAR PURPOSE.

TO THE EXTENT ALLOWED BY LOCAL LAW, IN NO EVENT WILL HP OR ITS SUPPLIERS BE LIABLE FOR DIRECT, SPECIAL, INCIDENTAL, CONSEQUENTIAL (INCLUDING LOST PROFIT OR DATA), OR OTHER DAMAGE, WHETHER BASED IN CONTRACT, TORT, OR OTHERWISE.

THE WARRANTY TERMS CONTAINED IN THIS STATEMENT, EXCEPT TO THE EXTENT LAWFULLY PERMITTED, DO NOT EXCLUDE, RESTRICT OR MODIFY AND ARE IN ADDITION TO THE MANDATORY STATUTORY RIGHTS APPLICABLE TO THE SALE OF THIS PRODUCT TO YOU.

HP policy on non-HP supplies

HP cannot recommend the use of non-HP Toner Reload Kits, non-HP toner, non-HP Laser Imaging Drums, and non-HP imaging system components, either new or remanufactured.

NOTE: For HP LaserJet Tank products, warranty does not cover printer or imaging drum failures or complications due to damage, contaminations, or general print related defects from use of non-HP Toner Reload Kits, non-HP Toner, non-HP Laser Imaging Drums, or non-HP Laser Imaging Drum components. In such case, HP will charge its standard time and materials charges to service the printer for the particular failure or damage.

Reminder on the use of non-Original HP supplies

Printer will not work as expected when non-Original HP supplies or HP supplies that have been refilled, refurbished, re-manufactured, or tampered with in any way are detected.

HP anticounterfeit Web site

Go to https://www.hp.com/go/anticounterfeit if you use an HP Laser Imaging Drum and a software or firmware message indicates that you have installed a previously used imaging drum. HP will help determine if the imaging drum is genuine and take steps to resolve the problem.

Your reload kit or imaging drum might not be a genuine HP Toner Reload Kit or HP Laser Imaging Drum if you notice the following:

- The supplies status page indicates that a non-HP supply, or a used or counterfeit supply, is installed or has been used.
- A software or firmware message indicates that a non-HP supply, or a used or counterfeit supply, is installed or has been used.
- You are experiencing a high number of problems with the reload kit or imaging drum.
- The reload kit or imaging drum does not look like it usually does (for example, the packaging differs from HP packaging).

End User License Agreement

READ CAREFULLY BEFORE USING THIS SOFTWARE EQUIPMENT:

This End-User License Agreement ("EULA") is a legal agreement between (a) you (either an individual or a single entity) and (b) HP Inc. ("HP") that governs your use of any Software Product, installed on or made available by HP for use with your HP product ("HP Product"), that is not otherwise subject to a separate license agreement between you and HP or its suppliers. Other software may contain a EULA in its online documentation. The term "Software Product" means computer software and may include associated media, printed materials and "online" or electronic documentation.

An amendment or addendum to this EULA may accompany the HP Product.

RIGHTS IN THE SOFTWARE PRODUCT ARE OFFERED ONLY ON THE CONDITION THAT YOU AGREE TO ALL TERMS AND CONDITIONS OF THIS EULA. BY INSTALLING, COPYING, DOWNLOADING, OR OTHERWISE USING THE SOFTWARE PRODUCT, YOU AGREE TO BE BOUND BY THE TERMS OF THIS EULA. IF YOU DO NOT ACCEPT THESE LICENSE TERMS, YOUR SOLE REMEDY IS TO RETURN THE ENTIRE UNUSED PRODUCT (HARDWARE AND SOFTWARE) WITHIN 14 DAYS FOR A REFUND SUBJECT TO THE REFUND POLICY OF YOUR PLACE OF PURCHASE.

THIS EULA IS A GLOBAL AGREEMENT AND IS NOT SPECIFIC TO ANY PARTICULAR COUNTRY, STATE OR TERRITORY. IF YOU ACQUIRED THE SOFTWARE AS A CONSUMER WITHIN THE MEANING OF RELEVANT CONSUMER LEGISLATION IN YOUR COUNTRY, STATE OR TERRITORY, THEN DESPITE ANYTHING TO THE CONTRARY IN THIS EULA, NOTHING IN THIS EULA AFFECTS ANY NON EXCLUDABLE STATUTORY RIGHTS OR REMEDIES THAT YOU MAY HAVE UNDER SUCH CONSUMER LEGISLATION AND THIS EULA IS SUBJECT TO THOSE RIGHTS AND REMEDIES. REFER TO SECTION 16 FOR FURTHER INFORMATION ON YOUR CONSUMER RIGHTS.

1. GRANT OF LICENSE. HP grants you the following rights provided you comply with all terms and conditions of this EULA:

   a. Use. You may use the Software Product on a single computer ("Your Computer"). If the Software Product is provided to you via the internet and was originally licensed for use on more than one computer, you may install and use the Software Product only on those computers. You may not separate component parts of the Software Product for use on more than one computer. You do not have the right to distribute the Software Product, nor do you have the right to modify the Software Product or disable any licensing or control feature of the Software Product. You may load the Software Product into Your Computer's temporary memory (RAM) for purposes of using the Software Product.

   b. Storage. You may copy the Software Product into the local memory or storage device of the HP Product.

   c. Copying. You may make archival or back-up copies of the Software Product, provided the copy contains all of the original Software Product's proprietary notices and that it is used only for back-up purposes.

   d. Reservation of Rights. HP and its suppliers reserve all rights not expressly granted to you in this EULA.

   e. Freeware. Notwithstanding the terms and conditions of this EULA, all or any portion of the Software Product which constitutes non-proprietary HP software or software provided under public license by third parties ("Freeware"), is licensed to you subject to the terms and conditions of the software license agreement accompanying such Freeware whether in the form of a discrete agreement, shrink wrap license or electronic license terms accepted at time of download. Use of the Freeware by you shall be governed entirely by the terms and conditions of such license.

   f. Recovery Solution. Any software recovery solution provided with/for your HP Product, whether in the form of a hard disk drive-based solution, an external media-based recovery solution (e.g. floppy disk, CD or DVD) or an equivalent solution delivered in any other form, may only be used for restoring the hard disk of the HP Product with/for which the recovery solution was originally purchased. The use of any Microsoft operating system software contained in such recovery solution shall be governed by the Microsoft License Agreement.

2. UPGRADES. To use a Software Product identified as an upgrade, you must first be licensed for the original Software Product identified by HP as eligible for the upgrade. After upgrading, you may no longer use the original Software Product that formed the basis for your upgrade eligibility. By using the Software Product, you also agree that HP may automatically access your HP Product when connected to the internet to check the version or status of certain Software Products and may automatically download and install upgrades or updates to such Software Products on to your HP Product to provide new versions or updates required to maintain the functionality, performance, or security of the Software Product and your HP Product and facilitate the provision of support or other services provided to you. In certain cases, and depending on the type of upgrade or update, notifications will be provided to you (via pop-up or other means), which may require you to initiate the upgrade or update.

3. ADDITIONAL SOFTWARE. This EULA applies to updates or supplements to the original Software Product provided by HP unless HP provides other terms along with the update or supplement. In case of a conflict between such terms, the other terms will prevail.

4. TRANSFER.

   a. Third Party. The initial user of the Software Product may make a one-time transfer of the Software Product to another end user. Any transfer must include all component parts, media, printed materials, this EULA, and if applicable, the Certificate of Authenticity. The transfer may not be an indirect transfer, such as a consignment. Prior to the transfer, the end user receiving the transferred product must agree to all the EULA terms. Upon transfer of the Software Product, your license is automatically terminated.

   b. Restrictions. You may not rent, lease or lend the Software Product or use the Software Product for commercial timesharing or bureau use. You may not sublicense, assign or transfer the license or Software Product except as expressly provided in this EULA.

5. PROPRIETARY RIGHTS. All intellectual property rights in the Software Product and user documentation are owned by HP or its suppliers and are protected by law, including but not limited to United States copyright, trade secret, and trademark law, as well as other applicable laws and international treaty provisions. You shall not remove any product identification, copyright notices or proprietary restrictions from the Software Product.

6. LIMITATION ON REVERSE ENGINEERING. You may not reverse engineer, decompile, or disassemble the Software Product, except and only to the extent that the right to do so is mandated under applicable law notwithstanding this limitation or it is expressly provided for in this EULA.

7. TERM. This EULA is effective unless terminated or rejected. This EULA will also terminate upon conditions set forth elsewhere in this EULA or if you fail to comply with any term or condition of this EULA.

8. NOTICE OF DATA COLLECTION.

   CONSENT TO COLLECTION/USE OF DATA.

   a. You agree that HP and its affiliates may collect, combine, and use device and individual user information you provide in relation to support services related to the Software Product. HP agrees not to use this information to market to you without your consent. Learn More about HP data collection practices at www.hp.com/go/privacy

   b. HP will use cookies and other web technology tools to collect anonymous technical information related to HP Software and your HP Product. This data will be used to provide the upgrades and related support or other services described in Section 2. HP will also collect personal information including your Internet Protocol address or other unique identifier information associated with your HP Product and data provided by you on registration of your HP Product. As well as providing the upgrades and related support or other services, this data will be used for sending marketing communications to you (in each case with your express consent where required by applicable law).

To the extent permitted by applicable law, by accepting these terms and conditions you consent to the collection and use of anonymous and personal data by HP, its subsidiaries, and affiliates as described in this EULA and as further described in HP's privacy policy: www.hp.com/go/privacy

c. Collection/Use by Third Parties. Certain software programs included in your HP Product are provided and separately licensed to you by third party providers ("Third Party Software"). Third Party Software may be installed and operational on your HP Product even if you choose not to activate/purchase such software. Third Party Software may collect and transmit technical information about your system (i.e., IP address, unique device identifier, software version installed, etc.) and other system data. This information is used by the third party to identify technical system attributes and ensure that the most current version of the software has been installed on your system. If you do not want the Third Party Software to collect this technical information or automatically send you version updates, you should uninstall the software prior to connecting to the Internet.

9. DISCLAIMER OF WARRANTIES. TO THE MAXIMUM EXTENT PERMITTED BY APPLICABLE LAW, HP AND ITS SUPPLIERS PROVIDE THE SOFTWARE PRODUCT "AS IS" AND WITH ALL FAULTS, AND HEREBY DISCLAIM ALL OTHER WARRANTIES, DUTIES, AND CONDITIONS, EITHER EXPRESS, IMPLIED, OR STATUTORY, INCLUDING, BUT NOT LIMITED TO, WARRANTIES: (i) OF TITLE AND NON-INFRINGEMENT; (ii) OF MERCHANTABILITY; (iii) OF FITNESS FOR A PARTICULAR PURPOSE; (iv) THAT THE SOFTWARE PRODUCT WILL FUNCTION WITH NON-HP SUPPLIES OR ACCESSORIES; AND (v), OF LACK OF VIRUSES ALL WITH REGARD TO THE SOFTWARE PRODUCT. Some states/jurisdictions do not allow exclusion of implied warranties or limitations on the duration of implied warranties, so the above disclaimer may not apply to you in its entirety.

10. LIMITATION OF LIABILITY. Subject to the laws of the People's Republic of China, notwithstanding any damages that you might incur, the entire liability of HP and any of its suppliers under any provision of this EULA and your exclusive remedy for all of the foregoing shall be limited to the greater of the amount actually paid by you separately for the Software Product or U.S. $5.00. TO THE MAXIMUM EXTENT PERMITTED BY APPLICABLE LAW, IN NO EVENT SHALL HP OR ITS SUPPLIERS BE LIABLE FOR ANY SPECIAL, INCIDENTAL, INDIRECT, OR CONSEQUENTIAL DAMAGES WHATSOEVER (INCLUDING, BUT NOT LIMITED TO, DAMAGES FOR LOSS OF PROFITS OR CONFIDENTIAL OR OTHER INFORMATION, FOR BUSINESS INTERRUPTION, FOR PERSONAL INJURY, OR FOR LOSS OF PRIVACY) ARISING OUT OF OR IN ANY WAY RELATED TO THE USE OF OR INABILITY TO USE THE SOFTWARE PRODUCT, OR OTHERWISE IN CONNECTION WITH ANY PROVISION OF THIS EULA, EVEN IF HP OR ANY SUPPLIER HAS BEEN ADVISED OF THE POSSIBILITY OF SUCH DAMAGES AND EVEN IF THE REMEDY FAILS OF ITS ESSENTIAL PURPOSE. Some states/jurisdictions do not allow the exclusion or limitation of incidental or consequential damages, so the above limitation or exclusion may not apply to you.

11. U.S. GOVERNMENT CUSTOMERS. Consistent with FAR 12.211 and 12.212, Commercial Computer Software, Computer Software Documentation, and Technical Data for Commercial Items are licensed to the U.S. Government under HP's standard commercial license.

12. COMPLIANCE WITH EXPORT LAWS. You shall comply with all laws and regulations of the United States and other countries ("Export Laws") to assure that the Software Product is not (1) exported, directly or indirectly, in violation of Export Laws, or (2) used for any purpose prohibited by Export Laws, including, without limitation, nuclear, chemical, or biological weapons proliferation.

13. CAPACITY AND AUTHORITY TO CONTRACT. You represent that you are of the legal age of majority in your state of residence and, if applicable, you are duly authorized by your employer to enter into this contract.

14. APPLICABLE LAW. This EULA is governed by the laws of the country in which the equipment was purchased.

15. ENTIRE AGREEMENT. This EULA (including any addendum or amendment to this EULA which is included with the HP Product) is the entire agreement between you and HP relating to the Software Product and it supersedes all prior or contemporaneous oral or written communications, proposals and representations with respect to the Software Product or any other subject matter covered by this EULA. To the extent the terms of any HP policies or programs for support services conflict with the terms of this EULA, the terms of this EULA shall control.

16. CONSUMER RIGHTS. Consumers in some countries, states or territories may have the benefit of certain statutory rights and remedies under consumer legislation in respect of which HP's liability cannot lawfully be excluded or limited. If you acquired the Software as a consumer within the meaning of relevant consumer legislation in your country, state or territory, the provisions of this EULA (including the disclaimers of warranties, limitations and exclusions of liability) must be read subject to applicable law and apply only to the maximum extent permitted by that applicable law.

    Australian Consumers: If you acquired the Software as a consumer within the meaning of the 'Australian Consumer Law' under the Australian Competition and Consumer Act 2010 (Cth) then despite any other provision of this EULA:

    a. the Software comes with guarantees that cannot be excluded under the Australian Consumer Law, including that goods will be of acceptable quality and services will be supplied with due care and skill. You are entitled to a replacement or refund for a major failure and compensation for any other reasonably foreseeable loss or damage. You are also entitled to have the Software repaired or replaced if it is not of acceptable quality and the failure does not amount to a major failure.

    b. nothing in this EULA excludes, restricts or modifies any right or remedy, or any guarantee, warranty or other term or condition implied or imposed by the Australian Consumer Law which cannot be lawfully excluded or limited; and

    c. the benefits provided to you by the express warranties in this EULA are in addition to other rights and remedies available to you under the Australian Consumer Law. Your rights under the Australian Consumer Law prevail to the extent that they are inconsistent with any limitations contained in the express warranty.

    d. The Software may be capable of retaining user-generated data. HP hereby provides you with notice that if HP repairs your Software, that repair may result in the loss of that data. To the full extent permitted by law, the limitations and exclusions of HP's liability in this EULA apply in respect of any such loss of data.

    If you think that you are entitled to any warranty under this agreement or any of the above remedies, please contact HP:

HP PPS Australia Pty Ltd

Rhodes Corporate Park, Building F, Level 5

1 Homebush Bay Drive

Rhodes, NSW 2138

Australia

To initiate a support request or warranty claim, please call 13 10 47 (within Australia) or +61 2 8278 1039 (if dialing internationally) or visit www8.hp.com/au/en/contact-hp/phone-assist.html for the most current list of phone support numbers.

If you are a consumer within the meaning of the Australia Consumer Law and you are purchasing the Software or warranty and support services for the Software which are not of a kind ordinarily acquired for personal, domestic or household use or consumption, then despite any other provision of this EULA, HP limits its liability for failure to comply with a consumer guarantee as follows:

a. provision of warranty or support services for the Software: to any one or more of the following: re-supply of the services or payment of the costs of having the services re-supplied;

b. provision of the Software: to any one or more of the following: replacement of the Software or the supply of equivalent software; repair of the Software; payment of the costs of replacing the Software or of acquiring equivalent software; or payment of the costs of having the Software repaired; and

c. otherwise, to the maximum extent permitted by law.

New Zealand Consumers: In New Zealand, the Software comes with guarantees that cannot be excluded under the Consumer Guarantees Act 1993. In New Zealand, Consumer Transaction means a transaction involving a person who is purchasing goods for personal, domestic or household use or consumption and not for the purpose of a business. New Zealand consumers who are purchasing goods for personal, domestic or household use or consumption and not for the purpose of a business ("New Zealand Consumers") are entitled to repair, replacement or refund for a failure and compensation for other reasonably foreseeable loss or damage. A New Zealand Consumer (as defined above) may recover the costs of returning the product to the place of purchase if there is a breach of the New Zealand consumer law; furthermore, if it will be of significant cost to the New Zealand Consumer to return the goods to HP then HP will collect such goods at its own cost. Where any supply of products or services is for business purposes, you agree that the Consumer Guarantees Act 1993 does not apply and that given the nature and value of the transaction, this is fair and reasonable.

© Copyright 2022 HP Development Company, L.P.

The information contained herein is subject to change without notice. All other product names mentioned herein may be trademarks of their respective companies. To the extent permitted by applicable law, the only warranties for HP products and services are set forth in the express warranty statements accompanying such products and services. Nothing herein should be construed as constituting an additional warranty. To the extent permitted by applicable law, HP shall not be liable for technical or editorial errors or omissions contained herein.

Customer self-repair warranty service

HP products are designed with many Customer Self Repair (CSR) parts to minimize repair time and allow for greater flexibility in performing defective parts replacement. If during the diagnosis period, HP identifies that the repair can be accomplished by the use of a CSR part, HP will ship that part directly to you for replacement. There are two categories of CSR parts: 1) Parts for which customer self repair is mandatory. If you request HP to replace these parts, you will be charged for the travel and labor costs of this service. 2) Parts for which customer self repair is optional. These parts are also designed for Customer Self Repair. If, however, you require that HP replace them for you, this may be done at no additional charge under the type of warranty service designated for your product.

Based on availability and where geography permits, CSR parts will be shipped for next business day delivery. Same-day or four-hour delivery may be offered at an additional charge where geography permits. If assistance is required, you can call the HP Technical Support Center and a technician will help you over the phone. HP specifies in the materials shipped with a replacement CSR part whether a defective part must be returned to HP. In cases where it is required to return the defective part to HP, you must ship the defective part back to HP within a defined period of time, normally five (5) business days. The defective part must be returned with the associated documentation in the provided shipping material. Failure to return the defective part may result in HP billing you for the replacement. With a customer self repair, HP will pay all shipping and part return costs and determine the courier/carrier to be used.

Customer support

Table B-2 Customer Support

Support	URL links
Get telephone support for your country/region Have the product name, serial number, date of purchase, and problem description ready.	Country/region phone numbers are on the flyer that was in the box with your product or at www.hp.com/support

Table B-2 Customer Support (continued)

Support	URL links
Get 24-hour Internet support, and download software utilities and drivers	www.hp.com/support
Order additional HP service or maintenance agreements	www.hp.com/go/carepack
Register your product	www.register.hp.com

C Environmental product stewardship program

This section describes the environmental-friendly product stewardship program at HP.

Protecting the environment

HP is committed to providing quality products in an environmentally sound manner. This product has been designed with several attributes to minimize impacts on our environment.

Ozone production

The airborne emissions of ozone for this product have been measured according to a standardized protocol and when these emissions data are applied to an anticipated high-use scenario in an office workspace, HP has determined there is no appreciable amount of ozone generated during printing and the levels are well within current indoor air quality standards and guidelines.

References -

Test method for the determination of emissions from hardcopy devices with respect to awarding the environmental label for office devices with printing function; DE-UZ 205 – BAM; January 2018.

Based on ozone concentration when printing 2 hours per day in 30.6 cubic meter room with a ventilation rate of 0.68 air changes per hour with HP printing supplies.

Power consumption

Power usage drops significantly while in Ready, Sleep, or Off mode, which saves natural resources and saves money without affecting the high performance of this product. HP printing and imaging equipment marked with the ENERGY STAR® logo is qualified to the U.S. Environmental Protection Agency's ENERGY STAR specifications for imaging equipment. The following mark will appear on ENERGY STAR qualified imaging products:

Additional ENERGY STAR qualified imaging product model information is listed at:

www.hp.com/go/energystar

Toner consumption

EconoMode uses less toner, which might extend the life of the Imaging drum. HP does not recommend the full-time use of EconoMode. If EconoMode is used full-time, the toner supply might outlast the mechanical parts in the Imaging drum.

Paper use

This product's duplex feature (manual or automatic) and N-up printing (multiple pages printed on one page) capability can reduce paper usage and the resulting demands on natural resources.

Plastics

Plastic parts over 25 grams are marked according to international standards that enhance the ability to identify plastics for recycling purposes at the end of the product's life.

HP LaserJet print supplies

Original HP Supplies were designed with the environment in mind. HP makes it easy to conserve resources and paper when printing. And when you are done, we make it easy and free to recycle.[1]

All HP Toner Reload Kits returned to HP Planet Partners go through a multiphase recycling process. No Original HP Toner Reload Kits returned through HP Planet Partners are ever sent to a landfill, and HP never refills or resells Original HP Toner Reload Kits.

To participate in HP Planet Partners return and recycling program, visit www.hp.com/recycle. Select your country/region for information on how to return HP printing supplies. Multi-lingual program information and instructions are also included in every new HP LaserJet Toner Reload Kit.

[1] Program availability varies. For more information, visit www.hp.com/recycle

Paper

This product is capable of using recycled paper and lightweight paper (EcoFFICIENT™) when the paper meets the guidelines outlined in the *HP Laser Printer Family Print Media Guide*. This product is suitable for the use of recycled paper and lightweight paper (EcoFFICIENT™) according to EN12281:2002.

Material restrictions

This HP product does not contain added mercury.

Disposal of waste equipment by users (EU and India)

This symbol means do not dispose of your product with your other household waste. Instead, you should protect human health and the environment by handing over your waste equipment to a designated collection point for the recycling of waste electrical and electronic equipment. For more information, please contact your household waste disposal service, or go to: www.hp.com/recycle

Electronic hardware recycling

HP encourages customers to recycle used electronic hardware. For more information about recycling programs go to: www.hp.com/recycle

Hardware recycling information (Brazil)

Não descarte o produto eletrônico em lixo comum

Este produto eletrônico e seus componentes não devem ser descartados no lixo comum, pois embora estejam em conformidade com padrões mundiais de restrição a substâncias nocivas, podem conter, ainda que em quantidades mínimas, substâncias impactantes ao meio ambiente. Ao final da vida útil deste produto, o usuário deverá entregá-lo à HP. A não observância dessa orientação sujeitará o infrator às sanções previstas em lei.

Após o uso, as pilhas e/ou baterias dos produtos HP deverão ser entregues ao estabelecimento comercial ou rede de assistência técnica autorizada pela HP.

Para maiores informações, inclusive sobre os pontos de recebimento, acesse:

www8.hp.com/br/pt/ads/planet-partners/index.html

Chemical substances

HP is committed to providing our customers with information about the chemical substances in our products as needed to comply with legal requirements such as REACH (Regulation EC No 1907/2006 of the European Parliament and the Council). A chemical information report for this product can be found at: www.hp.com/go/reach

Product Power Data per European Union Commission Regulation 1275/2008

For product power data, including the power consumption of the product in networked standby if all wired network ports are connected and all wireless network ports are activated, please refer to section P14 'Additional Information' of the product IT ECO Declaration at www.hp.com/hpinfo/globalcitizenship/environment/productdata/itecodesktop-pc.html

SEPA Ecolabel User Information (China)

中国环境标识认证产品用户说明

噪声大于 63.0 dB(A)的办公设备不宜放置于办公室内，请在独立的隔离区域使用。

如需长时间使用本产品或打印大量文件，请确保在通风良好的房间内使用。

如您需要确认本产品处于零能耗状态，请按下电源关闭按钮，并将插头从电源插座断开。

您可以使用再生纸，以减少资源耗费。

Restriction on Hazardous Substances statement (India)

This product, as well as its related consumables and spares, complies with the reduction in hazardous substances provisions of the "India E-waste Rule 2016." It does not contain lead, mercury, hexavalent chromium, polybrominated biphenyls or polybrominated diphenyl ethers in concentrations exceeding 0.1 weight % and 0.01 weight % for cadmium, except where allowed pursuant to the exemptions set in Schedule 2 of the Rule.

WEEE (Turkey)

Türkiye Cumhuriyeti: AEEE Yönetmeliğine Uygundur

The Table of Hazardous Substances/Elements and their Content (China)

产品中有害物质或元素的名称及含量
The Table of Hazardous Substances/Elements and their Content

根据中国《电器电子产品有害物质限制使用管理办法》
As required by China's Management Methods for Restricted Use of Hazardous Substances in Electrical and Electronic Products

部件名称 Part Name	有害物质 Hazardous Substances					
	铅 Lead (Pb)	汞 Mercury (Hg)	镉 Cadmium (Cd)	六价铬 Hexavalent Chromium (Cr(VI))	多溴联苯 Polybrominated biphenyls (PBB)	多溴二苯醚 Polybrominated diphenyl ethers (PBDE)
打印引擎	X	○	○	○	○	○
复印机组件	X	○	○	○	○	○
控制面板	X	○	○	○	○	○
塑料外壳	○	○	○	○	○	○
格式化板组件	X	○	○	○	○	○
碳粉盒	X	○	○	○	○	○

CHR-LJ-PK-MFP-02

表格依据SJ/T 11364 的规定编制。
This form has been prepared in compliance with the provisions of SJ/T 11364.

○：表示该有害物质在该部件所有均质材料中的含量均在GB/T 26572 规定的限量要求以下。
○: Indicates that the content of said hazardous substance in all of the homogenous materials in the component is within the limits required by GB/T 26572.

X：表示该有害物质至少在该部件的某一均质材料中的含量超出GB/T 26572 规定的限量要求。
X: Indicates that the content of said hazardous substance exceeds the limits required by GB/T 26572 in at least one homogenous material in the component.

此表中所有名称中含 "X" 的部件均符合中国 RoHS达标管理目录限用物质应用例外清单的豁免。
All parts named in this table with an "X" are in compliance with the China RoHS "List of Exceptions to RoHS Compliance Management Catalog (or China RoHS Exemptions)".

此表中所有名称中含 "X" 的部件均符合欧盟 RoHS 立法。
All parts named in this table with an "X" are in compliance with the European Union's RoHS Legislation.

注：环保使用期限的参考标识取决于产品正常工作的温度和湿度等条件
Note: The referenced Environmental Protection Use Period Marking was determined according to normal operating use conditions of the product such as temperature and humidity.

Material Safety Data Sheet (MSDS)

Material Safety Data Sheets (MSDS) for supplies containing chemical substances (for example, toner) can be obtained by accessing the HP Web site at www.hp.com/go/msds

EPEAT

Many HP products are designed to meet EPEAT. EPEAT is a comprehensive environmental rating that helps identify greener electronics equipment. For more information on EPEAT go to www.epeat.net. For information on HP's EPEAT registered products go to www8.hp.com/us/en/hp-information/global-citizenship/index.html

Declaration of the Presence Condition of the Restricted Substances Marking (Taiwan)

台灣 限用物質含有情況標示聲明書

Taiwan Declaration of the Presence Condition of the Restricted Substances Marking

單元Unit	限用物質及其化學符號 Restricted substances and its chemical symbols					
	鉛Lead (Pb)	汞Mercury (Hg)	鎘Cadmium (Cd)	六價鉻 Hexavalent chromium (Cr^{+6})	多溴聯苯 Polybrominated biphenyls (PBB)	多溴二苯醚 Polybrominated diphenyl ethers (PBDE)
列印引擎 Print engine	—	○	○	○	○	○
外殼和紙匣 External Casing and Trays	○	○	○	○	○	○
電源供應器 Power Supply	—	○	○	○	○	○
電線 Cables	○	○	○	○	○	○
印刷電路板 Print printed circuit board	—	○	○	○	○	○
控制面板 Control pane	—	○	○	○	○	○
碳粉匣 Cartridge	○	○	○	○	○	○

備考1. "超出0.1 wt %" 及 "超出0.01 wt %" 係指限用物質之百分比含量超出百分比含量基準值。
Note 1："Exceeding 0.1 wt %" and "exceeding 0.01 wt %" indicate that the percentage content of the restricted substance exceeds the reference percentage value of presence conditio

備考2. "○" 係指該項限用物質之百分比含量未超出百分比含量基準值。
Note 2："○" indicates that the percentage content of the restricted substance does not exceed the percentage of reference value of presence.

備考3. "—" 係指該項限用物質為排除項目。
Note 3：The "–" indicates that the restricted substance corresponds to the exemption.

TWR-LJ-PK-SF-02

若要存取產品的最新使用指南或手冊，請前往 www.support.hp.com。選取**搜尋您的產品**，然後依照 畫面上的指示繼續執行。

To access the latest user guides or manuals for your product, go to www.support.hp.com. Select **Find your product**, and then follow the onscreen instructions.

For more information

To obtain information about these environmental topics:

- Product environmental profile sheet for this and many related HP products
- HP's commitment to the environment
- HP's environmental management system
- HP's end-of-life product return and recycling program
- Material Safety Data Sheets

Visit www.hp.com/go/environment

Also, visit www.hp.com/recycle

D Regulatory information

This section describes the regulatory statements.

Regulatory statements

The printer meets product requirements from regulatory agencies in your country/region.

European Union & United Kingdom Regulatory Notice

Products bearing the CE marking and UKCA marking comply with one or more of the following EU Directives and/or equivalent UK Statutory Instruments as may be applicable: Low Voltage Directive 2014/35/EU, EMC Directive 2014/30/EU, Eco Design Directive 2009/125/EC, RED 2014/53/EU, RoHS Directive 2011/65/EU.

Compliance with these directives is assessed using applicable European Harmonized Standards. The full EU and UK Declaration of Conformity can be found at the following website: www.hp.com/go/certificates (Search with the product model name or its Regulatory Model Number (RMN), which may be found on the regulatory label.)

The point of contact for regulatory matters is: Email techregshelp@hp.com

The EU point of contact for regulatory matters is:

HP Deutschland GmbH, HP HQ-TRE, 71025 Boeblingen, Germany

The UK point of contact for regulatory matters is:

HP Inc UK Ltd, Regulatory Enquiries, Earley West, 300 Thames Valley Park Drive, Reading, RG6 1PT

Regulatory model identification numbers

For regulatory identification purposes, your product is assigned a regulatory model number. Regulatory model numbers should not be confused with marketing names or product numbers.

Table D-1 Regulatory model identification numbers

Product model number	Regulatory model number
HP LaserJet Tank 1020	SHNGC-2100-00

Table D-1 Regulatory model identification numbers (continued)

Product model number	Regulatory model number
HP LaserJet Tank 1020w	SHNGC-2100-01
HP LaserJet Tank 2506dw	
HP LaserJet Tank 1502w	
HP LaserJet Tank 2504dw	
HP LaserJet Tank 1504w	
HP LaserJet Tank 2502d	

FCC regulations

This equipment has been tested and found to comply with the limits for a Class B digital device, pursuant to Part 15 of the FCC rules. These limits are designed to provide reasonable protection against harmful interference in a residential installation. This equipment generates, uses, and can radiate radio frequency energy. If this equipment is not installed and used in accordance with the instructions, it may cause harmful interference to radio communications. However, there is no guarantee that interference will not occur in a particular installation. If this equipment does cause harmful interference to radio or television reception, which can be determined by turning the equipment off and on, the user is encouraged to try to correct the interference by one or more of the following measures:

- Reorient or relocate the receiving antenna.
- Increase separation between equipment and receiver.
- Connect equipment to an outlet on a circuit different from that to which the receiver is located.
- Consult your dealer or an experienced radio/TV technician.

NOTE: Any changes or modifications to the printer that are not expressly approved by HP could void the user's authority to operate this equipment.

Use of a shielded interface cable is required to comply with the Class B limits of Part 15 of FCC rules.

Canada - Industry Canada ICES-003 Compliance Statement

CAN ICES-3(B)/NMB-3(B)

Power cord instructions

Make sure your power source is adequate for the product voltage rating. The voltage rating is on the product label. The product uses either 110-127 Vac or 220-240 Vac and 50/60 Hz.

Connect the power cord between the product and a grounded AC outlet.

CAUTION: To prevent damage to the product, use only the power cord that is provided with the product.

Laser safety

The Center for Devices and Radiological Health (CDRH) of the U.S. Food and Drug Administration has implemented regulations for laser products manufactured since August 1, 1976. Compliance is mandatory for products marketed in the United States. The device is certified as a "Class 1" laser product under the U.S.

Department of Health and Human Services (DHHS) Radiation Performance Standard according to the Radiation Control for Health and Safety Act of 1968. Since radiation emitted inside the device is completely confined within protective housings and external covers, the laser beam cannot escape during any phase of normal user operation.

⚠ WARNING! Using controls, making adjustments, or performing procedures other than those specified in this user guide may result in exposure to hazardous radiation.

For other US/Canada regulatory matters, please contact:

HP Inc.

HP Inc. 1501 Page Mill Rd, Palo Alto, CA 94304, USA

Email contact: (techregshelp@hp.com) or Telephone contact: +1 (650) 857-1501

Laser statement for Finland

Luokan 1 laserlaite

HP LaserJet Tank 1020, 150x, 250x series, laserkirjoitin on käyttäjän kannalta turvallinen luokan 1 laserlaite. Normaalissa käytössä kirjoittimen suojakotelointi estää lasersäteen pääsyn laitteen ulkopuolelle. Laitteen turvallisuusluokka on määritetty standardin EN 60825-1 (2014) mukaisesti.

VAROITUS !

Laitteen käyttäminen muulla kuin käyttöohjeessa mainitulla tavalla saattaa altistaa käyttäjän turvallisuusluokan 1 ylittävälle näkymättömälle lasersäteilylle.

VARNING !

Om apparaten används på annat sätt än i bruksanvisning specificerats, kan användaren utsättas för osynlig laserstrålning, som överskrider gränsen för laserklass 1.

HUOLTO

HP LaserJet Tank 1020, 150x, 250x series - kirjoittimen sisällä ei ole käyttäjän huollettavissa olevia kohteita. Laitteen saa avata ja huoltaa ainoastaan sen huoltamiseen koulutettu henkilö. Tällaiseksi huoltotoimenpiteeksi ei katsota väriainekasetin vaihtamista, paperiradan puhdistusta tai muita käyttäjän käsikirjassa lueteltuja, käyttäjän tehtäväksi tarkoitettuja ylläpitotoimia, jotka voidaan suorittaa ilman erikoistyökaluja.

VARO !

Mikäli kirjoittimen suojakotelo avataan, olet alttiina näkymättömällelasersäteilylle laitteen ollessa toiminnassa. Älä katso säteeseen.

VARNING !

Om laserprinterns skyddshölje öppnas då apparaten är i funktion, utsättas användaren för osynlig laserstrålning. Betrakta ej strålen.

Tiedot laitteessa käytettävän laserdiodin säteilyominaisuuksista: Aallonpituus 775-795 nm Teho 5 m W Luokan 3B laser.

GS statement (Germany)

Das Gerät ist nicht für die Benutzung im unmittelbaren Gesichtsfeld am Bildschirmarbeitsplatz vorgesehen. Um störende Reflexionen am Bildschirmarbeitsplatz zu vermeiden, darf dieses Produkt nicht im unmittelbaren Gesichtsfeld platziert werden.

Das Gerät ist kein Bildschirmarbeitsplatz gemäß BildscharbV. Bei ungünstigen Lichtverhältnissen (z. B. direkte Sonneneinstrahlung) kann es zu Reflexionen auf dem Display und damit zu Einschränkungen der Lesbarkeit der dargestellten Zeichen kommen.

Die Bilddarstellung dieses Gerätes ist nicht für verlängerte Bildschirmtätigkeiten geeignet.

Nordic Statements (Denmark, Finland, Norway, Sweden)

Denmark:

Apparatets stikprop skal tilsuttes en stikkontakt med jord, som giver forbindelse til stikproppens jord.

Finland:

Laite on liitettävä suojakoskettimilla varustettuun pistorasiaan.

Norway:

Apparatet må tilkoples jordet stikkontakt.

Sweden:

Apparaten skall anslutas till jordat uttag.

Eurasian Conformity (Armenia, Belarus, Kazakhstan, Kirgizstan, Russia)

Производитель и дата производства

EAC

HP Inc.

Адрес: 1501 Page Mill Road, Palo Alto, California 94304, U.S.

Дата производства зашифрована в 10-значном серийном номере, расположенном на наклейке со служебной информацией изделия. 4-я, 5-я и 6-я цифры обозначают год и неделю производства. 4-я цифра обозначает год, например, «3» обозначает, что изделие произведено в «2013» году. 5-я и 6-я цифры обозначают номер недели в году производства, например, «12» обозначает «12-ю» неделю.

Өндіруші және өндіру мерзімі

HP Inc.

Мекенжайы: 1501 Page Mill Road, Palo Alto, California 94304, U.S.

Өнімнің жасалу мерзімін табу үшін өнімнің қызмет көрсету жапсырмасындағы 10 таңбадан тұратын сериялық нөмірін қараңыз. 4-ші, 5-ші және 6-шы сандар өнімнің жасалған жылы мен аптасын көрсетеді. 4-ші сан жылын көрсетеді, мысалы «3» саны «2013» дегенді білдіреді. 5-ші және 6-шы сандары берілген жылдың қай аптасында жасалғанын көрсетеді, мысалы, «12» саны «12-ші» апта дегенді білдіреді.

Местные представители

Россия: ООО "Эйч Пи Инк",

Российская Федерация, 125171, г . Москва, Ленингра дское шоссе, 1 6А, стр.3,

Телефон/факс: +7 495 797 35 00 / +7 499 92132 50

Казахстан: Филиал компании "ЭйчПи Глобал Трэйдинг Би.Ви.", Республика Казахстан, 050040, г. Алматы, Бостандыкский район, проспект Аль-Фараби, 77/7,

Телефон/факс: + 7 7 27 355 35 52

Жергілікті өкілдіктері

Ресей: ООО "Эйч Пи Инк",

Ресей Федерациясы, 125171, Мәскеу, Ленинград шоссесі, 16А блок 3,

Телефон/факс: +7 495 797 35 00 / +7 499 92132 50

Қазақстан: "ЭйчПи Глобал Трэйдинг Би.Ви." компаниясының Қазақстандағы филиалы, Қазақстан Республикасы, 050040, Алматы к., Бостандык ауданы, Әл- Фараби даңғылы, 77/7,

Телефон/факс: +7 727 355 35 52

Wireless statements

The statements in this section apply to wireless-capable printers only.

FCC compliance statement—United States

Exposure to radio frequency radiation

⚠ CAUTION: The radiated output power of this device is far below the FCC radio frequency exposure limits. Nevertheless, the device shall be used in such a manner that the potential for human contact during normal operation is minimized.

In order to avoid the possibility of exceeding the FCC radio frequency exposure limits, human proximity to the antenna shall not be less than 20 cm (8 in) during normal operation.

This device complies with Part 15 of FCC Rules. Operation is subject to the following two conditions: (1) this device may not cause interference, and (2) this device must accept any interference, including interference that may cause undesired operation of the device.

⚠ CAUTION: Based on Section 15.21 of the FCC rules, changes of modifications to the operation of this product without the express approval by HP may invalidate its authorized use.

Australia statement

This device incorporates a radio-transmitting (wireless) device. For protection against radio transmission exposure, it is recommended that this device be operated no less than 20 cm from the head, neck, or body.

Belarus statement

В соответствии с Постановлением Совета Министров Республики Беларусь от 24 мая 2017 года № 383 (об описании и порядке применения знака соответствия к техническому регламенту Республики Беларусь) продукция, требующая подтверждения соответствия техническому регламенту Республики Беларусь, размещенная на рынке Республики Беларусь, должна быть маркирована знаком соответствия TP BY.

Brazil: (Portuguese)

Este equipamento não tem direito à proteção contra interferência prejudicial e não pode causar interferência em sistemas devidamente autorizados.

Para maiores informações consulte o site da ANATEL – www.anatel.gov.br

Canadian statements

For Indoor Use. This digital apparatus does not exceed the Class B limits for radio noise emissions from digital apparatus as set out in the radio interference regulations of the Canadian Department of Communications. The internal wireless radio complies with RSS 210 of Industry Canada.

Pour l'usage d'intérieur. Le présent appareil numérique ńémet pas de bruits radioélectriques dépassant les limites applicables aux appareils numériques de Classe B prescribes dans le règlement sur le brouillage radioélectrique édicté par le Ministère des Communications du Canada. Le composant RF interne est conforme à la norme CNR-210 d'Industrie Canada.

China CMIIT Wireless statements

中国无线电发射设备通告

型号核准代码显示在产品本体的铭牌上。

Korean statement

무선 전용제품:

해당 무선설비는 전파혼신 가능성이 있음으로 인명안전과 관련된 서비스는 할 수 없음. (무선모듈제품이 설치되어있는경무)

Taiwan statement (Traditional Chinese)

取得審驗證明之低功率射頻器材，非經核准，公司、商號或使用者均不得擅自變更頻率、加大功率或變更原設計之特性及功能。低功率射頻器材之使用不得影響飛航安全及干擾合法通信；經發現有干擾現象時，應立即停用，並改善至無干擾時方得繼續使用。前述合法通信，指依電信管理法規定作業之無線電通信。低功率射頻器材須忍受合法通信或工業、科學及醫療用電波輻射性電機設備之干擾。

應避免影響附近雷達系統之操作。

高增益指向性天線只得應用於固定式點對點系統。

Products with 5 GHz Operation Industry of Canada

⚠ CAUTION: When using IEEE 802.11a wireless LAN, this product is restricted to indoor use, due to its operation in the 5.15- to 5.25-GHz frequency range. Industry Canada requires this product to be used indoors for the frequency range of 5.15 GHz to 5.25 GHz to reduce the potential for harmful interference to co-channel mobile satellite systems. High-power radar is allocated as the primary user of the 5.25- to 5.35-GHz and 5.65- to 5.85-GHz bands. These radar stations can cause interference with and/or damage to this device.

Lors de l'utilisation d'un réseau local sans fil IEEE 802.11a, ce produit est réservé à une utilisation en intérieur en raison de sa plage de fréquences, comprise entre 5,15 et 5,25 GHz. Industrie Canada recommande l'utilisation en intérieur de ce produit pour la plage de fréquences comprise entre 5,15 et 5,25 GHz afin de réduire les interférences nuisibles potentielles avec les systèmes de satellite portables utilisant le même canal. Le radar à haute puissance est défini comme étant le principal utilisateur des bandes 5,25 à 5,35 GHz et 5,65 à 5,85 GHz. Ces stations radar peuvent provoquer des interférences sur ce périphérique et/ou l'endommager.

Taiwan NCC Statement:(Only for 5GHz)

應避免影響附近雷達系統之操作。

Exposure to Radio Frequency Radiation (Canada)

⚠ WARNING! Exposure to Radio Frequency Radiation. The radiated output power of this device is below the Industry Canada radio frequency exposure limits. Nevertheless, the device should be used in such a manner that the potential for human contact is minimized during normal operation.

⚠ WARNING! Exposition aux émissions de fréquences radio. La puissance de sortie émise par ce périphérique est inférieure aux limites fixées par Industrie Canada en matière d'exposition aux fréquences radio. Néanmoins, les précautions d'utilisation du périphérique doivent être respectées afin de limiter tout risque de contact avec une personne.

To avoid the possibility of exceeding the Industry Canada radio frequency exposure limits, human proximity to the antennas should not be less than 20 cm (8 inches).

Pour éviter tout dépassement des limites fixées par Industrie Canada en matière d'exposition aux fréquences radio, la distance entre les utilisateurs et les antennes ne doit pas être inférieure à 20 cm (8 pouces).

European regulatory notice

The telecommunications functionality of this product may be used in the following European countries/regions:

Austria, Belgium, Bulgaria, Cyprus, Czech Republic, Denmark, Estonia, Finland, France, Germany, Greece, Hungary, Iceland, Ireland, Italy, Latvia, Liechtenstein, Lithuania, Luxembourg, Malta, Netherlands, Norway, Poland, Portugal, Romania, Slovak Republic, Slovenia, Spain, Sweden, Switzerland, and United Kingdom.

Notice for use in Russia

Существуют определенные ограничения по использованию беспроводных сетей (стандарта 802.11 b/g) с рабочей частотой 2,4 ГГц: Данное оборудование может использоваться внутри помещений с использованием диапазона частот 2400-2483,5 МГц (каналы 1-13). При использовании внутри помещений максимальная эффективная изотропно–излучаемая мощность (ЭИИМ) должна составлять не более 100мВт.

Mexico statement

Aviso para los usuarios de México

“La operación de este equipo está sujeta a las siguientes dos condiciones: (1) es posible que este equipo o dispositivo no cause interferencia perjudicial y (2) este equipo o dispositivo debe aceptar cualquier interferencia, incluyendo la que pueda causar su operación no deseada."

Para saber el modelo de la tarjeta inalámbrica utilizada, revise la etiqueta regulatoria de la impresora.

Thailand statement

เครื่องวิทยุคมนาคมนี้มีระดับการแผ่คลื่นแม่เหล็กไฟฟ้าสอดคล้องตามมาตรฐานความปลอดภัยต่อสุขภาพของมนุษย์จากการใช้เครื่องวิทยุคมนาคมที่คณะกรรมการกิจการโทรคมนาคมแห่งชาติประกาศกำหนด

This radio communication equipment has the electromagnetic field strength in compliance with the Safety Standard for the Use of Radio Communication Equipment on Human Health announced by the National Telecommunications Commission.

Vietnam Telecom

NOTE: Telecom wireless marking for ICTQC Type approved products.