Maintenance and Service Guide

HP ZBook Ultra G3a 16 inch Mobile Workstation PC

SUMMARY

This guide provides maintenance information about such topics as spare parts, removal and replacement of parts, security, and backing up.

Legal information

© Copyright 2026 HP Development Company, L.P.

AMD and Ryzen are trademarks of Advanced Micro Devices, Inc. Bluetooth is a trademark owned by its proprietor and used by HP Inc. under license. Thunderbolt is a trademark of Intel Corporation or its subsidiaries in the U.S. and/or other countries. Microsoft and Windows are either registered trademarks or trademarks of Microsoft Corporation in the United States and/or other countries. The microSD Logo and microSD are trademarks of SD-3C LLC. USB Type-C, USB-C, and the USB 10 Gbps port logos are trademarks or registered trademarks of USB Implementers Forum, Inc. DisplayPort and the DisplayPort logo are trademarks owned by the Video Electronics Standards Association (VESA) in the United States and other countries. Wi-Fi is a registered trademarks of Wi-Fi Alliance.

The information contained herein is subject to change without notice. The only warranties for HP products and services are set forth in the express warranty statements accompanying such products and services. Nothing herein should be construed as constituting an additional warranty. HP shall not be liable for technical or editorial errors or omissions contained herein.

First Edition: September 2026

Document Part Number: P24631-001

Product notice

This guide describes features that are common to most products. Some features might not be available on your computer.

To access the latest user guides, go to http://www.hp.com/support, and follow the instructions to find your product. Then select **Setup & User Guides**.

Software Terms

By installing, copying, downloading, or otherwise using any software product preinstalled on this computer, you agree to be bound by the terms of the HP End User License Agreement (EULA). If you do not accept these license terms, your sole remedy is to return the entire unused product (hardware and software) within 14 days for a full refund subject to the refund policy of your seller.

For any further information or to request a full refund of the price of the computer, please contact your seller.

Safety warning notice

Reduce the possibility of heat-related injuries or of overheating the computer by following the practices described.

⚠ **WARNING!** To reduce the possibility of heat-related injuries or of overheating the computer, do not place the computer directly on your lap or obstruct the computer air vents. Use the computer only on a hard, flat surface. Do not allow another hard surface, such as an adjoining optional printer, or a soft surface, such as pillows, rugs or clothing, to block airflow. Also, do not allow the AC adapter to come into contact with the skin or a soft surface, such as pillows, rugs or clothing, during operation. The computer and the AC adapter provided by HP comply with the user-accessible surface temperature limits defined by applicable safety standards.

Important notice about Customer Self-Repair parts

Your computer includes Customer Self-Repair parts and parts that should be accessed only by an authorized service provider.

IMPORTANT: See Removal and replacement procedures for Customer Self-Repair parts on page 32 for details.

Accessing parts described in Removal and replacement procedures for authorized service provider parts on page 53 can damage the computer or void your warranty.

Table of contents

1 Product description 1

2 Components 4

Right 4

Left 5

Display 7

Low blue light mode (select products only) 7

Keyboard area 8

Touchpad 8

Touchpad settings 8

Adjusting touchpad settings 8

Turning on the touchpad 9

Touchpad components 9

Lights 9

Buttons, speakers, and fingerprint reader 10

Special keys 12

Bottom 13

Rear 14

Labels 14

3 Illustrated parts catalog 17

Computer major components 17

Miscellaneous parts 20

4 Removal and replacement procedures preliminary requirements 24

Tools required 24

Service considerations 24

Plastic parts 24

Cables and connectors 24

Drive handling 24

Electrostatic discharge information 25

Generating static electricity 25

Preventing electrostatic damage to equipment 26

Personal grounding methods and equipment 26

Grounding the work area 27

Recommended materials and equipment 27

Cleaning your computer 28

Enabling HP Easy Clean (select products only) 28

Removing dirt and debris from your computer 28

Cleaning your computer with a disinfectant 29

Caring for wood veneer (select products only) 30

Packaging and transporting guidelines 30
Accessing support information 30

5 Removal and replacement procedures for Customer Self-Repair parts 32

Component replacement procedures 32
Preparation for disassembly 32
Keyboard 32
Bottom cover 41
Battery 44
Removing and reinstalling the same battery 44
Installing a new battery 45
Solid-state drive 50

6 Removal and replacement procedures for authorized service provider parts 53

Component replacement procedures 53
WWAN module (select products only) 53
WWAN board (select products only) 55
Fans 55
Heat sink 56
System board 58
Speakers 62
SIM board (select products only) 63
SD card board 64
Power button/fingerprint reader assembly 65
Touchpad 66
WWAN antennas (select products only) 67
Display assembly 68
Top cover 70

7 Troubleshooting guide 71

Resources 71
General troubleshooting steps 72
Identify the issue 72
1. Understand the issue 73
Startup sequence 73
Failure classification 73
2. Examine the environment 75
3. Perform a visual inspection of hardware 75
4. Update BIOS and drivers 76
Manually updating BIOS and drivers 76
Remotely deploying the BIOS and drivers 76
Analyze the issue 76
5. Remove or uninstall recently added hardware, software 76
6. HP Hardware Diagnostics and Tools 77
HP PC Hardware Diagnostics UEFI 77
HP BIOS Configuration Utility (BCU) 78
HP Image Diagnostic Tool 79
Non-HP diagnostics tools 79
7. Status lights, blinking light codes, troubleshooting lights, and POST error messages 79

Status lights 79
Blinking light codes 80
POST error messages 80
Resolve the issue 81
8. Hard reset 82
9. Soft reset (Default Settings) 83
10. Reseat cables and connections 83
11. Test with minimum configuration 84
Essential hardware configuration 84
Safe mode 85
12. Test with verified working configuration (hardware or operating system) 85
13. Replace the system board 85
Verify solution 86
Helpful Hints 86
At startup 86
During operation 87
Consulting with HP Service 87
Common issues and possible solutions 88
Power-on issues 88
No power 88
Intermittent power-on, shutdown, restart 90
AC adapter issue 91
Battery not recognized, not charging 92
Battery discharges too fast 94
Burnt smell 94
POST 95
No video (with power) 95
Blinking lights 96
Diagnostic error messages 97
BIOS password 97
Performance (OS) 98
Intermittent shutdown 98
Blue screen 99
Freeze at Windows logo (hang or lockup) 101
Electromagnetic Interference (EMI) 102
No wake up 103
Unresponsive 104
Slow performance 105
HP Smart Adapter warning message 105
Incorrect time and date 106
Display 107
Display anomalies 107
Symptom 107
Quick check 108
HP PC Hardware Diagnostics (UEFI) for video test 108
Display assembly diagram 109
Dead pixel 109
No video (internal) 109

No video (external) 110
DisplayPort/VGA 110
HDMI 110
No or bad external video via docking 111
Incorrect or missing color/distorted image 112
Touch screen 113
I/O devices 114
Keyboard 114
Keyboard pointing stick (select products only) 115
Keyboard backlight 116
Touchpad 116
Network connectivity (RJ-45 jack) 117
Network connectivity wireless (WLAN) 117
WWAN 118
USB 118
Smart card reader 119
Speaker, headphone - audio issues 120
Thunderbolt 122
Storage 122
Hard drive or SSD not recognized 123
No boot to operating system (no read-write error) 124
Read-write error 125
Slow performance 125
Blue screen (BSOD) error 126
Noisy hard drive 126
Mechanical 127
Noise (sound) 127
Fan runs constantly 128
Thermal shutdown (hot) 129
Additional information 129
Acronyms 130
Blinking lights and startup error codes 130
Processor not executing code 131
BIOS recovery code unable to find valid BIOS recovery image 131
Memory module error 131
Graphics Controller Error (No Controller) 132
Failure System Board Error 132
Intel Trusted Execution Technology Error 132
Sure Start unable to find valid BIOS Boot Block image 132
Sure Start has identified a problem (Manual Recovery Policy Set) 132
POST error messages and user actions 133
Routine maintenance for performance improvement 134
Common blue screen error messages 135
Error message list 135
Bug check symbolic names 135
Microsoft general troubleshooting of Windows bug check codes 135
Use Windows Debugging Tool 136
Windows Software Development Kit (SDK) 136

Display issue: pixel anomalies 140
Cable management 141
Connector types 142
Flex cable 142
Horizontal cable insertion 143
Multiple-pin horizontal connector (LVDS cable to display panel) 143
Multiple-pin vertical connector (LVDS cable to system board) 143

8 Computer Setup (BIOS), TPM, and HP Sure Start 145

Using Computer Setup 145
Navigating and selecting in Computer Setup 145
Restoring factory settings in Computer Setup 145
Updating the BIOS 146
Determining the BIOS version 146
Preparing for a BIOS update 146
Downloading a BIOS update 147
Installing a BIOS update 147
Changing the boot order using the f9 prompt 148
TPM BIOS settings (select products only) 148
Using HP Sure Start (select products only) 148

9 Using HP PC Hardware Diagnostics 149

Using HP PC Hardware Diagnostics Windows (select products only) 149
Using an HP PC Hardware Diagnostics Windows hardware failure ID code 149
Accessing HP PC Hardware Diagnostics Windows 149
Accessing HP PC Hardware Diagnostics Windows from HP Support Assistant (select products only) 149
Accessing HP PC Hardware Diagnostics Windows from the Start menu (select products only) 150
Downloading HP PC Hardware Diagnostics Windows 150
Downloading the latest HP PC Hardware Diagnostics Windows version from HP 150
Downloading the HP PC Hardware Diagnostics Windows from the Microsoft Store 150
Downloading HP Hardware Diagnostics Windows by product name or number (select products only) 151
Installing HP PC Hardware Diagnostics Windows 151
Using HP PC Hardware Diagnostics UEFI 151
Using an HP PC Hardware Diagnostics UEFI hardware failure ID code 151
Starting HP PC Hardware Diagnostics UEFI 151
Starting HP PC Hardware Diagnostics UEFI through HP Hotkey Support software (select products only) 152
Downloading HP PC Hardware Diagnostics UEFI to a USB flash drive 152
Downloading the latest HP PC Hardware Diagnostics UEFI version 153
Downloading HP PC Hardware Diagnostics UEFI by product name or number (select products only) 153
Using Remote HP PC Hardware Diagnostics UEFI settings (select products only) 153
Downloading Remote HP PC Hardware Diagnostics UEFI 153
Downloading the latest Remote HP PC Hardware Diagnostics UEFI version 153
Downloading Remote HP PC Hardware Diagnostics UEFI by product name or number 154
Customizing Remote HP PC Hardware Diagnostics UEFI settings 154

10 Backing up, restoring, and recovering 155

Backing up information and creating recovery media 155

Using Windows tools for backing up 155

Using the HP Cloud Recovery Download Tool to create a recovery USB flash drive (select products only) 155

Restoring and recovering your system 155

Creating a system restore 156

Restoring and recovery methods 156

Recovering using the HP Recovery USB flash drive 156

Changing the computer boot order 157

Using HP Sure Recover (select products only) 157

11 Specifications 158

Computer specifications 158

Display specifications 158

12 Statement of memory volatility 160

Current BIOS steps 160

Nonvolatile memory usage 162

Questions and answers 163

Using HP Sure Start (select products only) 164

13 Power cord set requirements 165

Requirements for all countries 165

Requirements for specific countries and regions 165

14 Swelling or deformation of notebook battery 168

Swollen notebook batteries 168

Swollen battery is not a safety issue 168

Discontinue using a swollen battery 168

Replace a swollen battery 168

Minimize battery swelling 168

Adaptive Battery Optimizer (consumer notebooks) 169

HP Battery Health Manager (commercial notebooks) 169

15 Recycling 170

Index 171

1 Product description

This table provides detailed product information.

NOTE: For the latest specifications related to your computer, go to http://www.hp.com/support and follow the instructions to find your product. Select **Specifications & Accessories**, select **Product information**, and then select the specifications link.

Table 1-1 Product components and their descriptions

Category	Description
Product name	**HP ZBook Ultra G3a 16 inch Mobile Workstation PC**
Processor	AMD® Ryzen™ AI Max+ PRO 495
	AMD Ryzen AI Max+ 495
	AMD Ryzen AI Max PRO 490
	AMD Ryzen AI Max PRO 485
	AMD Ryzen AI Max PRO 480
	AMD Ryzen AI Max 490
	AMD Ryzen AI Max 485
Display	**16.0 in (40.64 cm)**
	WQUXGA (3840 × 2400), DreamColor, LED, antiglare, UWVA, 100% DCI-P3, eDP 1.4 + PSR, 500 nits, 120 Hz
	2.8 K (2880 × 1800), OLED + low blue light, BrightView, UWVA, 100% DCI-P3, eDP 1.5, 500 nits, 120 Hz (VRR)
	2.5 K (2560 × 1600), WLED + low blue light, antiglare, UWVA, AD-100, eDP 1.5, 500 nits, 120 Hz (VRR)
	2.5 K (2560 × 1600), WLED + low blue light, antiglare, UWVA, AD-100, eDP 1.5, 400 nits, 120 Hz (VRR)
	WUXGA (1920 × 1200), WLED + low blue light, antiglare, UWVA, 100% sRGB, eDP 1.4 + PSR2, 400 nits
Memory	Memory is onboard and not accessible or upgradeable
	Supports LPDDR5x-8533 memory in the following configurations: • 192 GB • 128 GB • 64 GB • 32 GB • 16 GB (Ryzen AI Max PRO 480 processor)
Primary storage	**PCIe, Non-Volatile Memory express (NVMe), M.2 2280 solid-state drives (SSDs)**
	8 TB, PCIe Gen4
	4 TB, PCIe Gen4
	2 TB, PCIe Gen4

Table 1-1 Product components and their descriptions (continued)

Category	Description
	1 TB, PCIe Gen4
	1 TB, PCIe Gen4, self-encrypting drive (SED), OPAL2
	512 GB, PCIe Gen4
	512 GB, PCIe Gen4, SED, OPAL2
Audio and video	Quad speakers
	Poly Studio
Video	HP 5 MP IR camera (wide field-of-view [WFOV])
	Dual-array microphone
Wireless LAN	**Wireless LAN** (M.2 1418 with dual antennas) (select products only)
	MediaTek MT7925 Wi-Fi® 7 + Bluetooth® 6.0 (802.11be 2 × 2)
	Wireless LPWAN (select products only)
	HP RW220-GL LTE (CAT-1bis)
	Wireless WAN (select products only)
	MediaTek T900 5G NR with HP Go
	MediaTek T900 5G NR
Ports	Audio-out (headphone)/audio-in (microphone) combo jack
	USB Type-A 10 Gbps port (2)
	USB Type-C® power connector and Thunderbolt™ port (2)
	USB Type-C 10 Gbps port
	HDMI port
Keyboard	**Keyboard**
	Backlit
	Haptic pad
Power requirements	**Battery** (HP Long Life, polymer)
	6 cell, 96 Wh
	HP Fast Charge Technology
	USB-C® adapters (select products only)
	180 W, GaN, slim, straight, PFC, 1.8 m (6.0 ft)
	140 W, GaN, wall mount, foldable
	140 W, GaN, wall mount, fixed
	Power cord (select products only)
	C5, conventional, straight, 1.0 m (3.3 ft), halogen free
	C5, premium, 1.0 m (3.3 ft)
	Nonstandard, black, straight, duckhead, halogen free

Table 1-1 Product components and their descriptions (continued)

Category	Description
Media	microSD™ memory card reader (select products only)
Security	Camera privacy cover
	Fingerprint sensor
	Nano security lock
Sensors	Accelerometer
	Thermal Sensor
	Hall sensor
	HP Sure Platform
Operating system	Windows® 11 Enterprise 64
	Windows 11 Enterprise 64 LTSC 2404 (24H2)
	Windows 11 Home 64 Copilot+ Premium
	Windows 11 Home 64 Copilot+ Premium Chinese Market CPPP
	Windows 11 Home 64 Copilot+ Premium Single Language Africa Market PPP
	Windows 11 Home 64 Copilot+ Premium Single Language APAC EM PPP
	Windows 11 Home 64 Copilot+ Premium Single Language India Market PPP
	Windows 11 Home 64 Copilot+ Premium Single Language Indonesia Market PPP
	Windows 11 Pro 64 Copilot+ Premium
	Ubuntu Linux 24.04
	FreeDOS
Serviceability	**End user replaceable parts**
	AC adapter
	Bottom cover
	Battery
	Keyboard

2 Components

Your computer features top-rated components. This chapter provides details about your components, where they are located, and how they work.

Right

Use this illustration and table to identify the components on the right side of the computer.

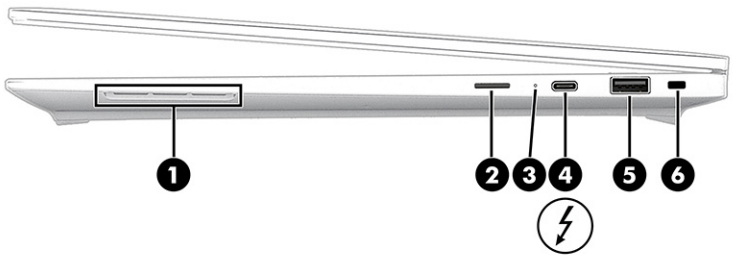

Table 2-1 Right-side components and their descriptions

	Component	Description
(1)	Speaker	Produces sound.
(2)	microSD™ memory card reader (select products only)	Reads optional memory cards that store, manage, share, or access information. To insert a card: 1. Hold the card label-side up, with the connectors facing the computer. 2. Insert the card into the memory card reader, and then press in on the card until it is firmly seated. To remove a card: ■ Press in on the card, and then remove it from the memory card reader.
(3)	Battery light	When AC power is connected: • White: The battery charge is greater than 90%. • Amber: The battery charge is from 0 to 90%. • Off: The battery is not charging. When AC power is disconnected (battery not charging): • Blinking amber: The battery has reached a low battery level. When the battery has reached a critical battery level, the battery light begins blinking rapidly. • Off: The battery is not charging.

Table 2-1 Right-side components and their descriptions (continued)

	Component	Description
(4)	USB Type-C® power connector and Thunderbolt™ port with HP Sleep and Charge and DisplayPort™ output	Connects an AC adapter that has a USB Type-C connector, supplying power to the computer and, if needed, charging the computer battery. – and – Connects a USB device, provides high-speed data transfer, and charges small devices (such as a smartphone), even when the computer is off. **NOTE:** Use a standard USB Type-C charging cable or cable adapter (purchased separately) when charging a small external device. – and – Connects a display device that has a USB Type-C connector, providing DisplayPort output. **NOTE:** Your computer might also support a Thunderbolt docking station.
(5)	USB 10 Gbps port	Connects a USB device, provides high-speed data transfer, and (for select products) charges small devices (such as a smartphone) when the computer is on or in sleep mode. **NOTE:** Use a standard USB Type-A charging cable or cable adapter (purchased separately) when charging a small external device.
(6)	Nano security cable slot	Attaches an optional security cable to the computer. **NOTE:** The security cable is designed to act as a deterrent, but it might not prevent the computer from being mishandled or stolen.

Left

Use this illustration and table to identify the components on the left side of the computer.

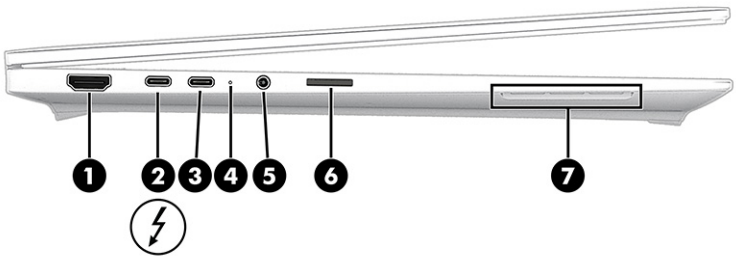

Table 2-2 Left-side components and their descriptions

	Component	Description
(1)	HDMI port	Connects an optional video or audio device, such as a high-definition television, any compatible digital or audio component, or a high-speed High Definition Multimedia Interface (HDMI) device.

Table 2-2 Left-side components and their descriptions (continued)

		Component	Description
(2)		USB Type-C power connector and Thunderbolt port with HP Sleep and Charge and DisplayPort output	Connects an AC adapter that has a USB Type-C connector, supplying power to the computer and, if needed, charging the computer battery. – and – Connects a USB device, provides high-speed data transfer, and charges small devices (such as a smartphone), even when the computer is off. **NOTE:** Use a standard USB Type-C charging cable or cable adapter (purchased separately) when charging a small external device. – and – Connects a display device that has a USB Type-C connector, providing DisplayPort output. **NOTE:** Your computer might also support a Thunderbolt docking station.
(3)		USB Type-C 10 Gbps port	Connects a USB device, provides high-speed data transfer, and (for select products) charges small devices (such as a smartphone) when the computer is on or in sleep mode. **NOTE:** Use a standard USB Type-C charging cable or cable adapter (purchased separately) when charging a small external device.
(4)		Battery light	When AC power is connected: • White: The battery charge is greater than 90%. • Amber: The battery charge is from 0 to 90%. • Off: The battery is not charging. When AC power is disconnected (battery not charging): • Blinking amber: The battery has reached a low battery level. When the battery has reached a critical battery level, the battery light begins blinking rapidly. • Off: The battery is not charging.
(5)		Audio-out (headphone)/Audio-in (microphone) combo jack	Connects optional powered stereo speakers, headphones, earbuds, a headset, or a television audio cable. Also connects an optional headset microphone. This jack does not support optional standalone microphones. **WARNING!** To reduce the risk of personal injury, adjust the volume before putting on headphones, earbuds, or a headset. For additional safety information, see the *Regulatory, Safety, and Environmental Notices*. To access this guide: ▪ Select the **Search** icon in the taskbar, type `HP Documentation` in the search box, and then select **HP Documentation**. **NOTE:** When a device is connected to the jack, the computer speakers are disabled.

Table 2-2 Left-side components and their descriptions (continued)

	Component	Description
(6)	Nano SIM card slot (select products only)	Supports a wireless subscriber identity module (SIM) card.
(7)	Speaker	Produces sound.

Display

Use this illustration and table to identify the display components.

Low blue light mode (select products only)

Your computer display is shipped from the factory in low blue light mode for improved eye comfort and safety. Also, blue light mode automatically adjusts blue light emissions when you are using the computer at night or for reading.

⚠ **WARNING!** To reduce the risk of serious injury, read the *Safety & Comfort Guide*. It describes proper workstation setup and proper posture, health, and work habits for computer users. The *Safety & Comfort Guide* also provides important electrical and mechanical safety information. The *Safety & Comfort Guide* is available on the web at http://www.hp.com/ergo.

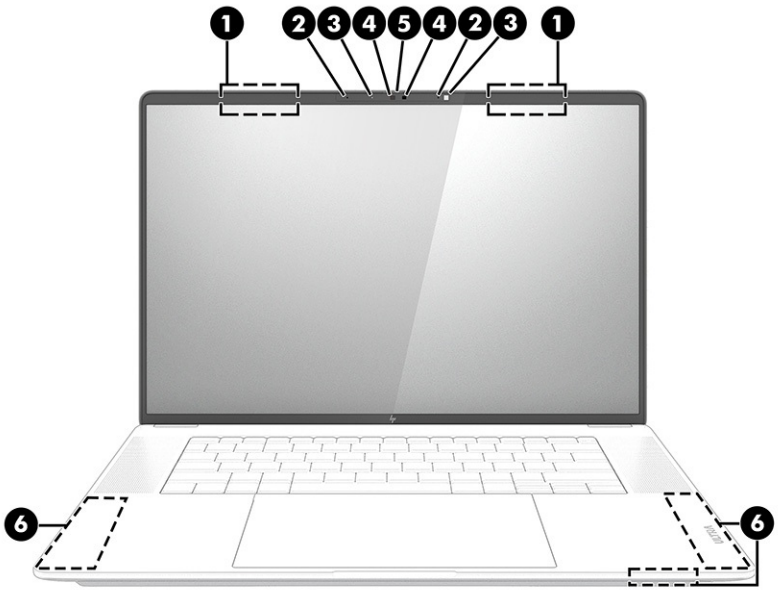

Table 2-3 Display components and their descriptions

	Component	Description
(1)	WLAN antennas (2) (select products only)*	Send and receive wireless signals to communicate with wireless local area networks (WLANs).
(2)	Internal microphones (2) (select products only)	Record sound.
(3)	Camera lights (2) (select products only)	On: One or more cameras are in use.

Table 2-3 Display components and their descriptions (continued)

	Component	Description
(4)	Cameras (2) (select products only)	Allow you to video chat, record video, and record still images. Some cameras also allow a facial recognition logon to Windows, instead of a password logon. **NOTE:** Camera functions vary depending on the camera hardware and software installed on your product.
(5)	Camera privacy cover (select products only)	By default, the camera lens is uncovered, but you can slide the camera privacy cover to block the camera's view. To use the camera, slide the camera privacy cover in the opposite direction to reveal the lens. **NOTE:** If you have both front-facing and rear-facing cameras, when one camera lens is revealed and ready to use, the other is concealed.
(6)	WWAN antennas (2) (select products only)*	Send and receive wireless signals to communicate with wireless wide area networks (WWANs).

*The antennas are not visible from the outside of the computer. For optimal transmission, keep the areas immediately around the antennas free from obstructions.

For wireless regulatory notices, see the section of the *Regulatory, Safety, and Environmental Notices* that applies to your country or region.

To access this guide:

- Select the **Search** icon in the taskbar, type `HP Documentation` in the search box, and then select **HP Documentation**.

Keyboard area

Keyboards can vary by language.

NOTE: The keyboard, including the function keys and power key (select products only), is disabled in stand, tent, and tablet modes. To enable the keyboard, including the power key, change to the clamshell mode.

Touchpad

The touchpad settings and components are described here.

Touchpad settings

You learn how to adjust the touchpad settings and components here.

Adjusting touchpad settings

Use these steps to adjust touchpad settings and gestures.

1. Select the **Search** icon in the taskbar, type `touchpad settings` in the search box, and then press enter.
2. Choose a setting.

Turning on the touchpad

Follow these steps to turn on the touchpad.

1. Select the **Search** icon in the taskbar, type `touchpad settings` in the search box, and then press enter.
2. Using an external mouse, click the **Touchpad** button.

   If you are not using an external mouse, press the Tab key repeatedly until the pointer rests on the **touchpad** button. Then press the spacebar to select the button.

Touchpad components

Use this illustration and table to identify the touchpad components.

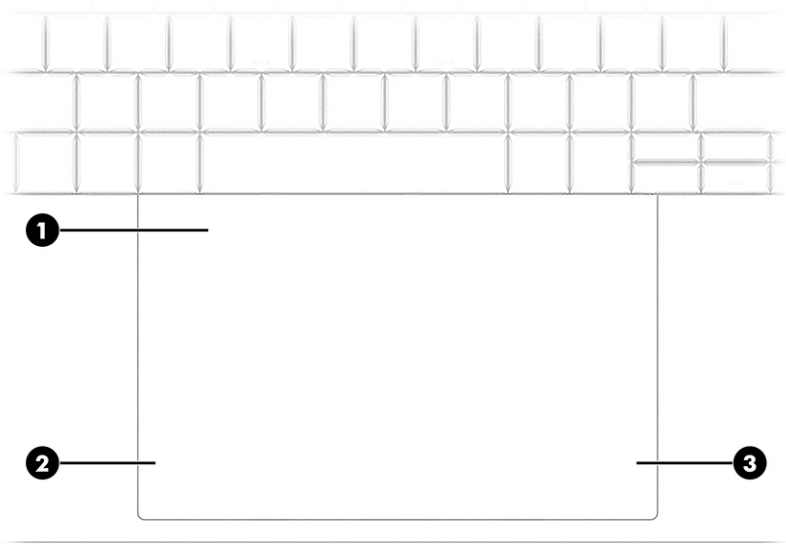

Table 2-4 Touchpad components and their descriptions

	Component	Description
(1)	Touchpad zone	Reads your finger gestures to move the pointer or activate items on the screen.
(2)	Left touchpad button	Functions like the left button on an external mouse.
(3)	Right touchpad button	Functions like the right button on an external mouse.

Lights

Use this illustration and table to identify the lights on the computer.

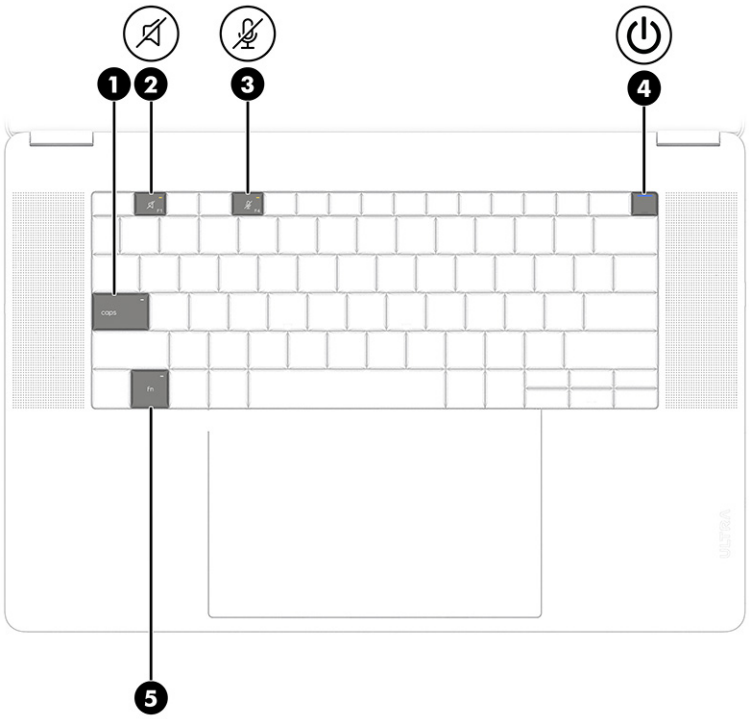

Table 2-5 Lights and their descriptions

	Component	Description
(1)	Caps lock light	On: Caps lock is on, which switches the key input to all capital letters.
(2)	Mute light	• On: Computer sound is off. • Off: Computer sound is on.
(3)	Microphone mute light	• On: Microphone is off. • Off: Microphone is on.
(4)	Power light	• On: The computer is on. • Blinking (select products only): The computer is in the sleep state, a power-saving state. The computer shuts off power to the display and other unnecessary components. • Off: Depending on your computer model, the computer is off, in hibernation, or in sleep. Hibernation is the power-saving state that uses the least amount of power.
(5)	Fn lock light	On: The fn key is locked.

Buttons, speakers, and fingerprint reader

Use this illustration and table to identify the buttons, speakers, and fingerprint reader.

IMPORTANT: To verify that your computer supports fingerprint reader sign-in, select the **Search** icon in the taskbar, type `Sign-in options` in the search box, and then select the **Sign-on options** app. If

Fingerprint recognition is not listed as an option, then your notebook does not include a fingerprint reader.

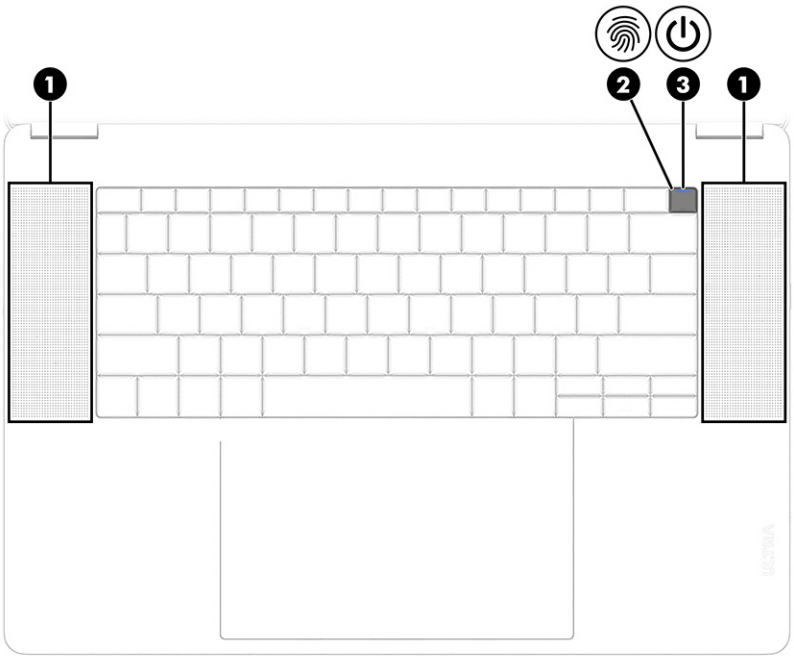

Table 2-6 Buttons, speakers, and fingerprint reader and their descriptions

	Component	Description
(1)	Speakers (2)	Produce sound.
(2)	Fingerprint reader (select products only)	Allows a fingerprint logon to Windows, instead of a password logon. ■ Touch your finger to the fingerprint reader. **IMPORTANT:** To prevent fingerprint logon issues, make sure when you register your fingerprint that all sides of your finger are registered by the fingerprint reader.

Table 2-6 Buttons, speakers, and fingerprint reader and their descriptions (continued)

	Component	Description
(3)	Power button	• When the computer is off, press the button briefly to turn on the computer. • When the computer is on, press the button briefly to initiate sleep. • When the computer is in the sleep state, press the button briefly to exit sleep (select products only). • When the computer is in hibernation, press the button briefly to exit hibernation. **IMPORTANT:** Pressing and holding down the power button results in the loss of unsaved information. If the computer has stopped responding and shutdown procedures are ineffective, press and hold the power button for at least 10 seconds to turn off the computer. To learn more about your power settings, use the Power icon. ▪ Right-click the **Power** icon, and then select **Power and sleep settings**.

Special keys

Use this illustration and table to identify the special keys.

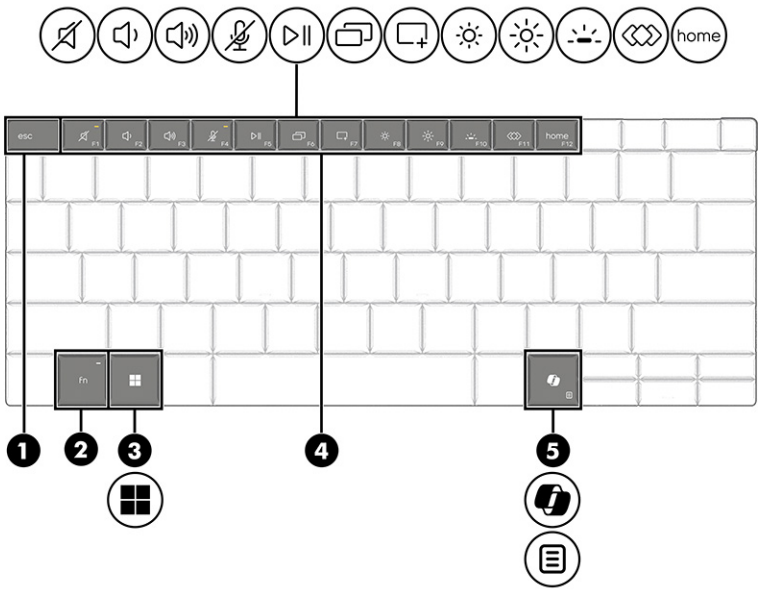

Table 2-7 Special keys and their descriptions

	Component	Description
(1)	esc key	Displays system information when pressed in combination with the fn key.

Table 2-7 Special keys and their descriptions (continued)

	Component	Description
(2)	fn key	Executes frequently used system functions when pressed in combination with another key. Such key combinations are called *hot keys*.
(3)	Windows key	Opens the Start menu. **NOTE:** Pressing the Windows key again will close the Start menu.
(4)	Action keys	Execute frequently used system functions.
(5)	Windows Copilot key – and – Windows application key	Opens Windows Copilot (select products only). **NOTE:** Copilot in Windows (select products only) requires Windows 11. Some features require a neural processing unit (NPU). The timing of feature delivery and availability varies by market and device. You must have a Microsoft account to use the Copilot feature. When the Copilot feature is not available, pressing the Copilot key opens the Bing search engine. See http://aka.ms/WindowsAIFeatures. – and – Displays options for a selected object when pressed in combination with the fn key.

Bottom

Use this illustration and table to identify the bottom component.

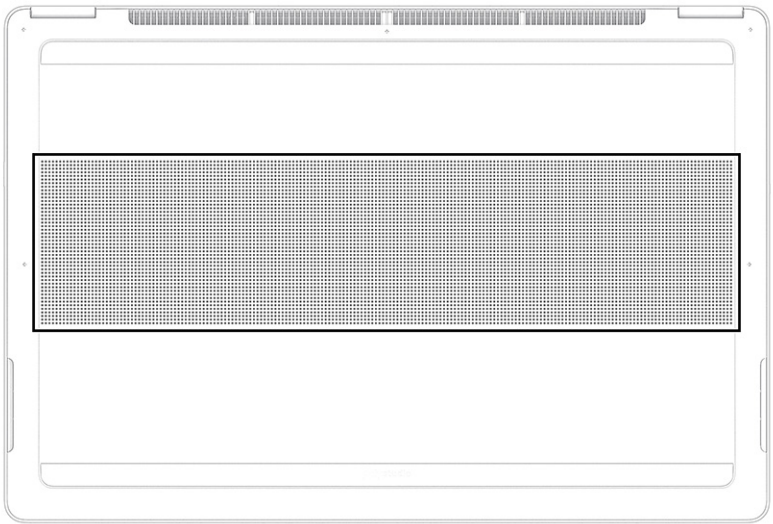

Table 2-8 Bottom component and its description

Component	Description
Vent	Enables airflow to cool internal components. **NOTE:** The computer fan starts up automatically to cool internal components and prevent overheating. It is normal for the internal fan to cycle on and off during routine operation.

Rear

Use this illustration and table to identify the rear component.



Table 2-9 Rear component and its description

Component	Description
Vent	Enables airflow to cool internal components. **NOTE:** The computer fan starts up automatically to cool internal components and prevent overheating. It is normal for the internal fan to cycle on and off during routine operation.

Labels

The labels affixed to the computer provide information you might need when you troubleshoot system problems or travel internationally with the computer. Labels might be in paper form or imprinted on the product.

IMPORTANT: Check the following locations for the labels described in this section: the bottom of the computer, inside the battery bay, under the service door, on the back of the display, or on the bottom of a tablet kickstand.

- Service label—Provides important information to identify your computer. When contacting support, you might be asked for the serial number, the product number, or the model number. Locate this information before you contact support.

  Your service label will resemble one of the examples shown below. Refer to the illustration that most closely matches the service label on your computer.



Table 2-10 Service label components

	Component
(1)	Serial number
(2)	Product ID
(3)	HP product name

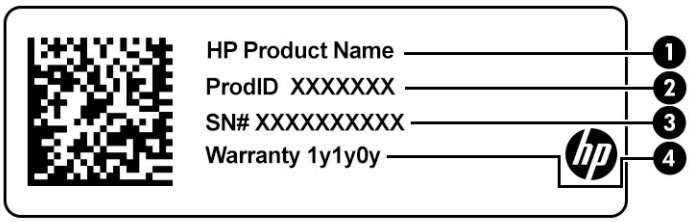

Table 2-11 Service label components

	Component
(1)	HP product name
(2)	Product ID
(3)	Serial number
(4)	Warranty period

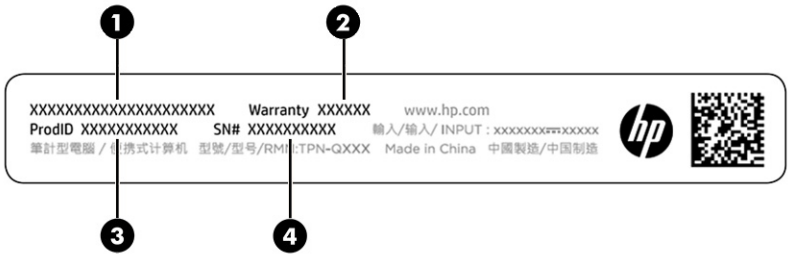

Table 2-12 Service label components

	Component
(1)	HP product name
(2)	Warranty period
(3)	Product ID
(4)	Serial number



Takes you to serial-number-specific information to assist with setting up and using the product as well as provides you with access to support information.

- Regulatory labels—Provide regulatory information about the computer.
- Wireless certification labels—Provide information about optional wireless devices and the approval markings for the countries or regions in which the devices have been approved for use.

3 Illustrated parts catalog

Use this chapter to determine the spare parts that are available for the computer.

Computer major components

Use this illustration and table to identify the computer major components.

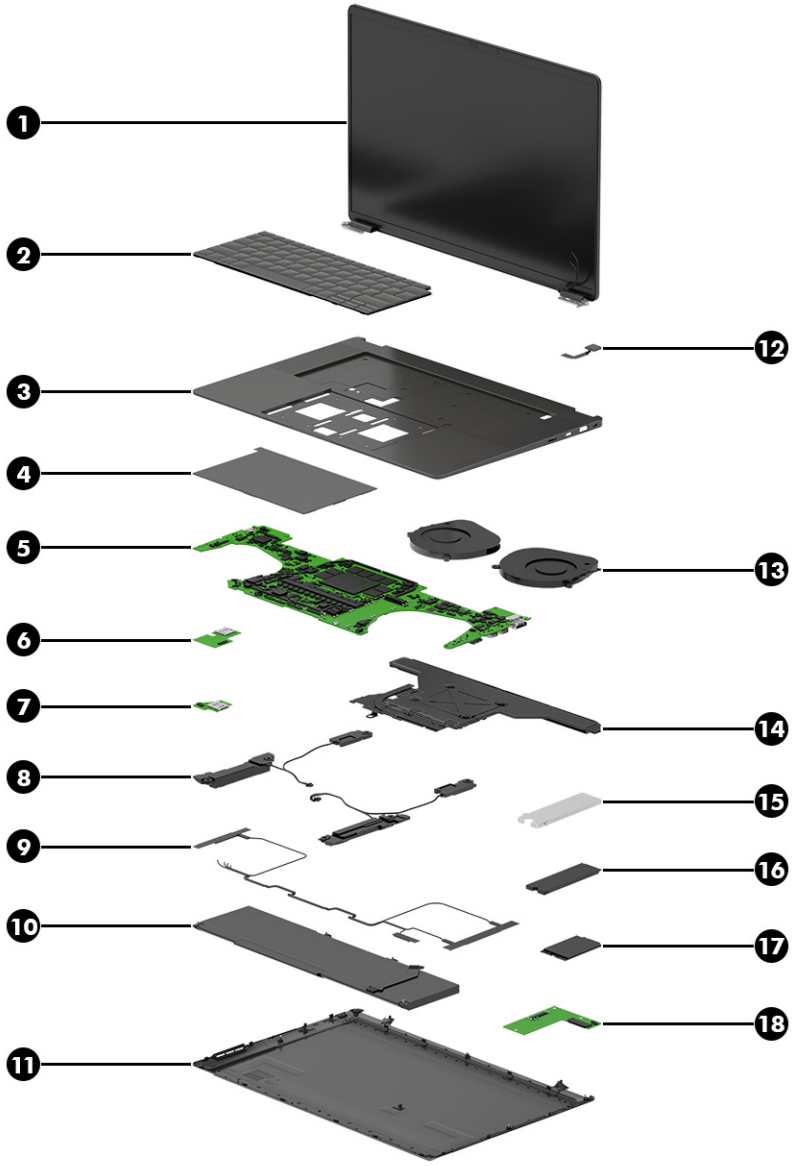

Table 3-1 Computer major component descriptions and part numbers

Item	Component	CSR category*	Spare part number
(1)	**Display assembly** **NOTE:** Displays are available only as entire assemblies.		
	HP DreamColor	N	Q29720-001
	2.8 K, with camera	N	Q29727-001
	2.8 K, no microphone, no camera	N	Q29728-001
	2.8 K, no camera	N	Q29729-001
	2.5 K, models, no WWAN	N	Q29721-001
	2.5 K, models, no WWAN, with camera	N	Q29722-001
	2.5 K, models with WWAN, with camera	N	Q29723-001
	WUXGA, models, no WWAN	N	Q29724-001
	WUXGA, models, no WWAN, with camera	N	Q29725-001
	WUXGA, models with WWAN, with camera	N	Q29726-001
(2)	**Keyboard** **NOTE:** For a detailed list of country codes, see Keyboard on page 32.	B	Q29730-xx1
(3)	**Top cover**		
	Models with WLAN only	N	Q32341-001
	Models with WWAN and WLAN	N	Q32340-001
(4)	**Touchpad** (includes cable)	N	Q32352-001
(5)	**System board** (includes processor and system memory)		
	AMD Ryzen AI Max+ PRO 495 and 192 GB system memory	N	Q29692-601
	AMD Ryzen AI Max+ PRO 495 and 192 GB system memory (The People's Republic of China [PRC])	N	Q29707-601
	AMD Ryzen AI Max+ PRO 495 and 128 GB system memory	N	Q29691-601
	AMD Ryzen AI Max+ PRO 495 and 128 GB system memory (PRC)	N	Q29706-601
	AMD Ryzen AI Max+ PRO 495 and 64 GB system memory	N	Q29693-601
	AMD Ryzen AI Max PRO 495 and 192 GB system memory (WWAN models)	N	Q29713-601
	AMD Ryzen AI Max PRO 495 and 128 GB system memory (WWAN models)	N	Q29712-601
	AMD Ryzen AI Max PRO 495 and 128 GB system memory (no WLAN, no Bluetooth models)	N	Q29708-601
	AMD Ryzen AI Max PRO 495 and 64 GB system memory (WWAN models)	N	Q29714-601
	AMD Ryzen AI Max PRO 490 and 192 GB system memory	N	Q29702-601
	AMD Ryzen AI Max PRO 490 and 64 GB system memory	N	Q29705-601
	AMD Ryzen AI Max PRO 490 and 32 GB system memory	N	Q29703-601

Table 3-1 Computer major component descriptions and part numbers (continued)

Item	Component	CSR category*	Spare part number
	AMD Ryzen AI Max PRO 490 and 32 GB system memory (PRC)	N	Q29704-601
	AMD Ryzen AI Max PRO 490 and 192 GB system memory (WWAN models)	N	Q29716-601
	AMD Ryzen AI Max PRO 490 and 128 GB system memory (WWAN models)	N	Q29715-601
	AMD Ryzen AI Max PRO 490 and 64 GB system memory (WWAN models)	N	Q29710-601
	AMD Ryzen AI Max PRO 485 and 64 GB system memory	N	Q29700-601
	AMD Ryzen AI Max PRO 485 and 64 GB system memory (PRC)	N	Q29701-601
	AMD Ryzen AI Max PRO 485 and 32 GB system memory	N	Q29699-601
	AMD Ryzen AI Max PRO 485 and 32 GB system memory (WWAN models)	N	Q29709-601
	AMD Ryzen AI Max PRO 480 and 16 GB system memory	N	Q29698-601
	AMD Ryzen AI Max 495 and 128 GB system memory (WWAN models)	N	Q29711-601
	AMD Ryzen AI Max 495 and 64 GB system memory	N	Q29690-601
	AMD Ryzen AI Max 490 and 64 GB system memory	N	Q29696-601
	AMD Ryzen AI Max 490 and 64 GB system memory (PRC)	N	Q29697-601
	AMD Ryzen AI Max 485 and 32 GB system memory	N	Q29694-601
	AMD Ryzen AI Max 485 and 32 GB system memory (PRC)	N	Q29695-601
(6)	**SD card board** (includes cable)	N	Q32347-001
(7)	**SIM board** (includes cable)	N	Q32348-001
(8)	**Speaker Kit**	N	Q32349-001
(9)	**WWAN antennas**	B	Q32338-001
(10)	**Battery** (includes revive kit)	A	P84280-001
(11)	**Bottom cover**	A	
	Models with WLAN only	A	Q42118-001
	Models with WWAN and WLAN	A	Q32354-001
(12)	**Power button/fingerprint reader assembly** (includes cable)	N	Q32344-001
(13)	**Fan Kit** (includes left and right fans)	B	Q32345-001
(14)	**Heat sink**		
	Models with 6/8 core processors	N	Q32346-001
	Models with 12/16 core processors	N	Q38771-001
(15)	**SSD bracket**	A	Q32356-001
(16)	**SSD**		
	4 TB, PCIe-5 × 4, TLC	A	Q06808-001
	2 TB, PCIe-5 × 4, TLC	A	P41682-001

Table 3-1 Computer major component descriptions and part numbers (continued)

Item	Component	CSR category*	Spare part number
	1 TB, PCIe-5 × 4, TLC	A	P32587-001
	1 TB, PCIe-5 × 4, TLC, self-encrypting drive (SED)	A	P90257-001
	512 GB, PCIe-5 × 4	A	P73029-001
	512 GB, PCIe-5 × 4, SED	A	P86946-001
(17)	**WWAN module**		
	HP RW220-GL LTE (CAT-1bis)	B	P47161-005
	MediaTek T900 5G NR	B	P62206-005
	MediaTek T900 5G NR with HP Go	B	P62207-005
(18)	**WWAN board**	B	Q32342-001

Table 3-2 CSR part categories*

Category	Description	Replacement responsibility
CSR A	Self-service parts	Customers can replace these easily replaceable parts. Replacement by trained technicians might incur additional cost.
CSR B/C	Optional self-service parts	Skilled customers can replace these parts. Warranty replacement available via trained technicians.
CSR N	Non-self-service parts	Only trained service technicians should replace these complex parts.

Miscellaneous parts

Use this table to identify the miscellaneous parts.

Table 3-3 Miscellaneous part descriptions and part numbers

Component	Spare part number
AC adapters	
140 W, USB-C, GaN, 2 pin, wall mount, 2.0 m (6.5 ft), fixed	P58633-001
140 W, USB-C, GaN, 2 pin, wall mount, 2.0 m (6.5 ft), foldable	P58634-001
180 W, USB-C	P88239-001
Adapters	
HDMI-to-VGA	701943-001
HDMI-to-VGA (TAA)	N25154-001
USB-C-to-DisplayPort, G2	N81435-001
USB-C-to-DisplayPort, G2 (TAA)	N81436-001
USB-C to HDMI 2.0	935325-001
USB-C-to-RJ-45	M95985-001

Table 3-3 Miscellaneous part descriptions and part numbers (continued)

Component	Spare part number
USB-C-to-RJ-45 (TAA)	N22602-001
USB-C to VGA	831751-001
USB adapter BT700	N46131-001
Carrying cases	
HP Everyday 16 OGR laptop bag	P04345-001
HP Everyday 16 OGR laptop backpack	P04346-001
HP Renew Business 17.3 laptop bag	M55005-001
HP Renew Business 17.3 laptop backpack	M55004-001
External optical drive	747080-001
HP nano lock	918431-001
HP Thunderbolt 4 180 W G6 Dock (with WLAN)	P34009-001
HP Thunderbolt 4 180 W G6 Dock (no WLAN) (TAA)	P34010-001
HP Thunderbolt 4 280 W G6 Dock (with WLAN)	P34012-001
HP Thunderbolt 4 280 W G6 Dock (no WLAN) (TAA)	P34013-001
Cable Kit (100 W/180 W) for use with G6 docking station	P34060-001
Cable Kit for use with Thunderbolt 4 280 W G6 docking station	P34061-001
Fan for use with Thunderbolt 4 180 W/280 W G6 docking station	P34058-001
Bottom case for use with G6 docking station	P34055-001
Top cover for use with G6 docking station	P34054-001
Screw Kit for use with G6 docking station	P34017-001
PCA board with WLAN for use with G6 docking station	P34056-001
PCA board without WLAN for use with G6 docking station	P34057-001
Power button for use with Thunderbolt 4 G6 docking station	P34106-001
USB mouse	L95713-001
HP 128 Laser Wired Mouse	M27885-001
HP 435 Wireless Mouse	M62277-001
HP 235 Wireless Mouse	M86086-001
HP 510/515 Rechargeable Mouse	N86885-001
HP 715 Multi-device Rechargeable Mouse	N21845-001
HP 510/515 Rechargeable Wireless Mouse	N86885-001
HP 320K Wired Keyboard	P24877-001
Poly Voyager 4320 USB-A Headset	N57159-001
Blackwire 3325 USB-A Headset	N45998-001
Blackwire 5220 USB-A Headset	N46012-001

Table 3-3 Miscellaneous part descriptions and part numbers (continued)

Component	Spare part number
VY 60UC USB-C Headset with touchscreen	N73088-001
Screw Kit	
Screw kit for computer	Q32355-001
Screw kit for G6 dock	P34017-001
Cable Kit (includes cables for SD board, SIM board, touchpad, haptic, fingerprint reader, and WWAN board)	Q32350-001
Bracket Kit (includes WWAN bracket)	Q32339-001
Misc Kit (includes I/O holder, top black plate, middle hook, keyboard graphite thermal pad, CF black gasket, double-sided keyboard tape, and keyboard gasket)	Q32351-001
WWAN module bracket	Q32343-001
Power cord (C5, premium, straight, 1.0 m [3.3 ft])	
Argentina	L30811-001
Australia	L22327-001
Brazil	L30812-001
Denmark	L22322-001
Europe (Austria, Belgium, Finland, France, Germany, the Netherlands, Norway, and Sweden)	L22321-001
Israel	L22323-001
India	L22624-001
Italy	L30813-001
Japan	L22330-001
North America	L22319-001
PRC	L21930-001
South Africa	L22325-001
South Korea	L22328-001
Switzerland	L22324-001
Taiwan	L22329-001
Thailand	L22326-001
United Kingdom	L22320-001
Power cord (C13, 1.8 m [6.0 ft], straight, premium)	
Argentina	L22104-001
Australia	L22339-001
Brazil	L57198-001
Denmark	L22334-001
Europe	L22333-001
India	L22343-001

Table 3-3 Miscellaneous part descriptions and part numbers (continued)

Component	Spare part number
Israel	L22335-001
Italy/Chile	L22103-001
Japan	L22344-001
North America	L22331-001
South Africa	L22337-001
South Korea	L22340-001
Switzerland	L22336-001
Taiwan	L22342-001
Thailand	L22338-001
Thailand (bundle)	M85413-001
United Kingdom	L22332-001
Power cord (C5, conventional, 1.0 m [3.3 ft], halogen free)	
Denmark	M79264-001
Europe	M79266-001
Switzerland	M79265-001
Thailand (bundle)	M85421-001
United Kingdom	M82711-001
Duckhead power cord (non-standard, halogen free)	
Argentina	P57788-001
Australia	P57784-001
Brazil	P57789-001
Europe (Austria, Belgium, Finland, France, Germany, the Netherlands, Norway, and Sweden)	P57782-001
India	P57790-001
Japan	L33157-001
PRC	P57787-001
South Korea	P57785-001
Thailand	P57786-001
United Kingdom	P57783-001

4 Removal and replacement procedures preliminary requirements

Use this information to properly prepare to disassemble and reassemble the computer.

Tools required

You need the following tools to complete the removal and replacement procedures:

- Nonconductive, nonmarking pry tool
- Magnetic Phillips P2 screwdriver

Service considerations

The following sections include some of the considerations that you must keep in mind during disassembly and assembly procedures.

NOTE: As you remove each subassembly from the computer, place the subassembly and all accompanying screws away from the work area to prevent damage.

Plastic parts

Using excessive force during disassembly and reassembly can damage plastic parts.

Cables and connectors

Handle cables with extreme care to avoid damage.

IMPORTANT: When servicing the computer, be sure that cables are placed in their proper locations during the reassembly process. Improper cable placement can damage the computer.

Apply only the tension required to unseat or seat the cables during removal and insertion. Handle cables by the connector whenever possible. In all cases, avoid bending, twisting, or tearing cables. Be sure that cables are routed so that they cannot be caught or snagged as you remove or replace parts. Handle flex cables with extreme care; these cables tear easily.

Drive handling

Note the following guidelines when handling drives.

IMPORTANT: Drives are fragile components. Handle them with care. To prevent damage to the computer, damage to a drive, or loss of information, observe these precautions:

- Before removing or inserting a hard drive, shut down the computer. If you are unsure whether the computer is off or in hibernation or sleep mode, turn the computer on, and then shut it down through the operating system.

- Before handling a drive, be sure that you are discharged of static electricity. While handling a drive, avoid touching the connector.
- Handle drives on surfaces covered with at least 2.54 cm (1 inch) of shock-proof foam.
- Avoid dropping drives from any height onto any surface.
- After removing a hard drive or an optical drive, place it in a static-proof bag.
- Avoid exposing an internal hard drive to products that have magnetic fields, such as monitors or speakers.
- Avoid exposing a drive to temperature extremes or liquids.
- If a drive must be mailed, place the drive in a bubble pack mailer or other suitable form of protective packaging, and label the package “FRAGILE.”

Electrostatic discharge information

A sudden discharge of static electricity from your finger or other conductor can destroy static-sensitive devices or microcircuitry. Often the spark is neither felt nor heard, but damage occurs. An electronic device exposed to electrostatic discharge (ESD) might not appear to be affected at all and can work perfectly throughout a normal cycle. The device might function normally for a while, but it has been degraded in the internal layers, reducing its life expectancy.

Networks built into many integrated circuits provide some protection, but in many cases, the discharge contains enough power to alter device parameters or melt silicon junctions.

IMPORTANT: To prevent damage to the device when you remove or install internal components, observe these precautions:

- Keep components in their electrostatic-safe containers until you are ready to install them.
- Before touching an electronic component, discharge static electricity by using the guidelines described in Personal grounding methods and equipment on page 26.
- Avoid touching pins, leads, and circuitry. Handle electronic components as little as possible.
- If you remove a component, place it in an electrostatic-safe container.

Generating static electricity

Follow these static electricity guidelines.

- Different activities generate different amounts of static electricity.
- Static electricity increases as humidity decreases.

Table 4-1 Static electricity occurrence based on activity and humidity

Event	55% relative humidity	40% relative humidity	10% relative humidity
Walking across carpet	7500 V	15,000 V	35,000 V
Walking across vinyl floor	3000 V	5000 V	12,000 V
Motions of bench worker	400 V	800 V	6000 V
Removing dual in-line packages (DIPs) from plastic tube	400 V	700 V	2000 V
Removing DIPs from vinyl tray	2000 V	4000 V	11,500 V
Removing DIPs from polystyrene foam	3500 V	5000 V	14,500 V
Removing bubble pack from PCB (printed circuit board)	7000 V	20,000 V	26,500 V
Packing PCBs in foam-lined box	5000 V	11,000 V	21,000 V

NOTE: Multiple electric components can be packaged together in plastic tubes, trays, or polystyrene foam.

NOTE: As little as 700 V of static electricity can degrade a product.

Preventing electrostatic damage to equipment

Many electronic components are sensitive to ESD. Circuitry design and structure determine the degree of sensitivity.

The following packaging and grounding precautions are necessary to prevent static electricity damage to electronic components:

- To avoid hand contact, transport products in static-safe containers such as tubes, bags, or boxes.
- Protect all electrostatic parts and assemblies with conductive or approved containers or packaging.
- Keep electrostatic-sensitive parts in their containers until they arrive at static-free stations.
- Place items on a grounded surface before removing them from their container.
- Always be properly grounded when touching a sensitive component or assembly.
- Avoid contact with pins, leads, or circuitry.
- Place reusable electrostatic-sensitive parts from assemblies in protective packaging or conductive foam.

Personal grounding methods and equipment

Using certain equipment can prevent static electricity damage to electronic components.

- **Wrist straps** are flexible straps with a maximum of 1 MΩ ±10% resistance in the ground cords. To provide proper ground, wear a strap snug against bare skin. Verify that the ground cord is connected and fits snugly into the banana plug connector on the grounding mat or workstation.
- You can use **heel straps, toe straps, and boot straps** at standing workstations. These straps are compatible with most types of shoes or boots. On conductive floors or dissipative floor mats, use them on both feet with a maximum of 1 MΩ ±10% resistance between the operator and ground.

Table 4-2 Static shielding protection levels

Method	Voltage
Antistatic plastic	1500
Carbon-loaded plastic	7500
Metalized laminate	15,000

Grounding the work area

To prevent static damage at the work area, follow these precautions.

- Cover the work surface with approved static-dissipative material.
- Use a wrist strap connected to a properly grounded work surface and use properly grounded tools and equipment.
- Use static-dissipative mats, foot straps, or air ionizers to give added protection.
- Handle electrostatic-sensitive components, parts, and assemblies by the case or PCB laminate. Handle them only at static-free work areas.
- Turn off power and input signals before inserting and removing connectors or test equipment.
- Use fixtures made of static-safe materials when fixtures must directly contact dissipative surfaces.
- Keep the work area free of nonconductive materials, such as ordinary plastic assembly aids and polystyrene foam.
- Use conductive field service tools, such as cutters, screwdrivers, and vacuums.
- Avoid contact with pins, leads, or circuitry.

Recommended materials and equipment

HP recommends certain materials and equipment to prevent static electricity.

- Antistatic tape
- Antistatic smocks, aprons, or sleeve protectors
- Conductive bins and other assembly or soldering aids
- Conductive foam
- Conductive tabletop workstations with ground cord of 1 MΩ ±10% resistance
- Static-dissipative table or floor mats with hard tie to ground
- Field service kits
- Static awareness labels
- Wrist straps and footwear straps providing 1 MΩ ±10% resistance
- Material handling packages
- Conductive plastic bags

- Conductive plastic tubes
- Conductive tote boxes
- Opaque shielding bags
- Transparent metallized shielding bags
- Transparent shielding tubes

Cleaning your computer

Cleaning your computer regularly removes dirt and debris so that your device continues to operate at its best. Use the following information to safely clean the external surfaces of your computer.

Enabling HP Easy Clean (select products only)

HP Easy Clean helps you to avoid accidental input while you clean the computer surfaces. This software disables devices such as the keyboard, touch screen, and touchpad for a preset amount of time so that you can clean all computer surfaces.

1. Start HP Easy Clean in one of the following ways:
   - Select the **Start** menu, and then select **HP Easy Clean**.
   - Select the **HP Easy Clean** icon in the taskbar.
   - Select **Start**, and then select the **HP Easy Clean** tile.
2. Now that your device is disabled for a short period, see Removing dirt and debris from your computer on page 28 for the recommended steps to clean the high-touch, external surfaces on your computer. After you remove the dirt and debris, you can also clean the surfaces with a disinfectant. See Cleaning your computer with a disinfectant on page 29 for guidelines to help prevent the spread of harmful bacteria and viruses.

Removing dirt and debris from your computer

Here are the recommended steps to clean dirt and debris from your computer.

For computers with wood veneer, see Caring for wood veneer (select products only) on page 30.

1. Wear disposable gloves made of latex (or nitrile gloves, if you are latex-sensitive) when cleaning the surfaces.
2. Turn off your device and unplug the power cord and other connected external devices. Remove any installed batteries from items such as wireless keyboards.

> ⚠ **CAUTION:** To prevent electric shock or damage to components, never clean a product while it is turned on or plugged in.

3. Moisten a microfiber cloth with water. The cloth should be moist, but not dripping wet.

> **IMPORTANT:** To avoid damaging the surface, avoid abrasive cloths, towels, and paper towels.

4. Wipe the exterior of the product gently with the moistened cloth.

IMPORTANT: Keep liquids away from the product. Avoid getting moisture in any openings. If liquid makes its way inside your HP product, it can cause damage to the product. Do not spray liquids directly on the product. Do not use aerosol sprays, solvents, abrasives, or cleaners containing hydrogen peroxide or bleach that might damage the finish.

5. Start with the display (if applicable). Wipe carefully in one direction, and move from the top of the display to the bottom. Finish with any flexible cables, like power cord, keyboard cable, and USB cables.

6. Be sure that surfaces have completely air-dried before turning the device on after cleaning.

7. Discard the gloves after each cleaning. Clean your hands immediately after you remove the gloves.

See Cleaning your computer with a disinfectant on page 29 for recommended steps to clean the high-touch, external surfaces on your computer to help prevent the spread of harmful bacteria and viruses.

Cleaning your computer with a disinfectant

The World Health Organization (WHO) recommends cleaning surfaces, followed by disinfection, as a best practice for preventing the spread of viral respiratory illnesses and harmful bacteria.

After cleaning the external surfaces of your computer using the steps in Removing dirt and debris from your computer on page 28, Caring for wood veneer (select products only) on page 30, or both, you might also choose to clean the surfaces with a disinfectant. A disinfectant that is within HP's cleaning guidelines is an alcohol solution consisting of 70% isopropyl alcohol and 30% water. This solution is also known as rubbing alcohol and is sold in most stores.

Follow these steps when disinfecting high-touch, external surfaces on your computer:

1. Wear disposable gloves made of latex (or nitrile gloves, if you are latex-sensitive) when cleaning the surfaces.

2. Turn off your device and unplug the power cord and other connected external devices. Remove any installed batteries from items such as wireless keyboards.

CAUTION: To prevent electric shock or damage to components, never clean a product while it is turned on or plugged in.

3. Moisten a microfiber cloth with a mixture of 70% isopropyl alcohol and 30% water. The cloth should be moist, but not dripping wet.

CAUTION: Do not use any of the following chemicals or any solutions that contain them, including spray-based surface cleaners: bleach, peroxides (including hydrogen peroxide), acetone, ammonia, ethyl alcohol, methylene chloride, or any petroleum-based materials, such as gasoline, paint thinner, benzene, or toluene.

IMPORTANT: To avoid damaging the surface, avoid abrasive cloths, towels, and paper towels.

4. Wipe the exterior of the product gently with the moistened cloth.

IMPORTANT: Keep liquids away from the product. Avoid getting moisture in any openings. If liquid makes its way inside your HP product, it can cause damage to the product. Do not spray liquids directly on the product. Do not use aerosol sprays, solvents, abrasives, or cleaners containing hydrogen peroxide or bleach that might damage the finish.

5. Start with the display (if applicable). Wipe carefully in one direction, and move from the top of the display to the bottom. Finish with any flexible cables, like power cord, keyboard cable, and USB cables.
6. Be sure that surfaces have completely air-dried before turning the device on after cleaning.
7. Discard the gloves after each cleaning. Clean your hands immediately after you remove the gloves.

Caring for wood veneer (select products only)

Your product might feature high-quality wood veneer. As with all natural wood products, proper care is important for best results over the life of the product. Because of the nature of natural wood, you might see unique variations in the grain pattern or subtle variations in color, which are normal.

- Clean the wood with a dry, static-free microfiber cloth or chamois.
- Avoid cleaning products containing substances such as ammonia, methylene chloride, acetone, turpentine, or other petroleum-based solvents.
- Do not expose the wood to sun or moisture for long periods of time.
- If the wood becomes wet, dry it by dabbing with an absorbent, lint-free cloth.
- Avoid contact with any substance that might dye or discolor the wood.
- Avoid contact with sharp objects or rough surfaces that might scratch the wood.

See Removing dirt and debris from your computer on page 28 for the recommended steps to clean the high-touch, external surfaces on your computer. After you remove the dirt and debris, you can also clean the surfaces with a disinfectant. See Cleaning your computer with a disinfectant on page 29 for sanitizing guidelines to help prevent the spread of harmful bacteria and viruses.

Packaging and transporting guidelines

Follow these grounding guidelines when packaging and transporting equipment.

- To avoid hand contact, transport products in static-safe tubes, bags, or boxes.
- Protect ESD-sensitive parts and assemblies with conductive or approved containers or packaging.
- Keep ESD-sensitive parts in their containers until the parts arrive at static-free workstations.
- Place items on a grounded surface before removing items from their containers.
- Always be properly grounded when touching a component or assembly.
- Store reusable ESD-sensitive parts from assemblies in protective packaging or nonconductive foam.
- Use transporters and conveyors made of antistatic belts and roller bushings. Be sure that mechanized equipment used for moving materials is wired to ground and that proper materials are selected to avoid static charging. When grounding is not possible, use an ionizer to dissipate electric charges.

Accessing support information

Use this information to find the HP support that you need.

Table 4-3 Support information locations

Service consideration	Path to access information
Records of reported failure incidents stored on the computer	**Windows®:** Pre-operating system failures are logged in the BIOS Event Log. To view the BIOS Event Log: 1. Press the power button. 2. Immediately and repeatedly press esc when the power button light turns white. **NOTE:** If you do not press esc at the appropriate time, you must restart the computer and again repeatedly press esc when the power button light turns white to access the utility. 3. Press f10 to enter the BIOS setup. 4. Complete one of these tasks: • (On commercial products) Under the **Main** tab, select **BIOS Event Log**, and then select **View BIOS Event Log**. • (On consumer products) Under the **Main** tab, select **System Log**. Post-operating system failures are logged in the Event Viewer. 1. Turn on the computer and allow the operating system to open. 2. Select the search icon in the taskbar. 3. Type `Event Viewer`, and then press enter. 4. Select the log from the left panel. Details display in the right panel.
Technical bulletins and alerts	To find technical bulletins, alerts, guides, and whitepapers: 1. Go to www.hp.com/support. 2. Follow the instructions to find your product. 3. Select **Bulletins and Alerts** to view technical bulletins.
Repair professionals	To locate repair professionals: 1. Go to www.hp.com. 2. Select **Authorized service providers**. 3. Select your location.
Component and diagnosis information, failure detection, and required action	To locate diagnosis information and actions: 1. Go to http://www.hp.com/go/techcenter/pcdiags. 2. Select the issue you want to diagnose.

5 Removal and replacement procedures for Customer Self-Repair parts

This chapter provides removal and replacement procedures for Customer Self-Repair parts.

NOTE: The Customer Self-Repair program is not available in all locations. Installing a part that is not supported by the Customer Self-Repair program can void your warranty. Check your warranty to determine whether Customer Self-Repair is supported in your location.

NOTE: The HP Support YouTube Channel (in English) has videos that provide step-by-step removal and replacement instructions for many common parts and models.

Component replacement procedures

Use these procedures to remove and replace computer components.

NOTE: Details about your computer, including model, serial number, product key, and length of warranty, are on the service tag at the bottom of your computer.

NOTE: HP continually improves and changes product parts. For complete and current information about supported parts for your computer, go to https://partsurfer.hp.com/, select your country or region, and then follow the on-screen instructions.

Make special note of each screw size and location during removal and replacement.

Preparation for disassembly

Use these procedures to remove and replace computer components.

For initial safety procedures, see Removal and replacement procedures preliminary requirements on page 24.

1. Turn off the computer. If you are unsure whether the computer is off or in hibernation or sleep mode, turn the computer on, and then shut it down through the operating system.
2. Disconnect power from the computer by unplugging the power cord from the computer.
3. Disconnect all external devices from the computer.

Keyboard

Use this procedure to remove the keyboard. The first table includes the keyboard spare part number. The second table includes keyboard country codes.

Table 5-1 Keyboard description and part number

Description	Spare part number
Keyboard	Q29730-xx1

Table 5-2 Spare part country codes

For use in country or region	Spare part number
Belgium	-A41
Czech Republic/Slovakia	-FL1
Denmark, Finland, and Norway	-DH1
French Canada	-DB1
France	-051
Germany	-041
Greece	-151
Israel	-BB1
Italy	-061
Japan	-291
Latin America	-161
The Netherlands	-B31
Russia	-251
Saudi Arabia	-171
Slovenia	-BA1
South Korea	-AD1
Spain	-071
Switzerland	-BG1
Taiwan	-AB1
Thailand	-281
Turkey	-141
Ukraine	-BD1
United Kingdom	-031
United States	-001

Before removing the keyboard, follow these steps:

- Prepare the computer for disassembly (see Preparation for disassembly on page 32).

Disable the battery using Computer Setup (BIOS)

Before replacing the keyboard, be sure to disable the battery as follows:

⚠ **CAUTION:** Failure to disable the battery before removing the keyboard can result in component damage.

1. Turn off the computer.
2. Disconnect the power and all external devices.

3. Ground yourself to prevent electrostatic discharge (ESD) (use a wrist strap or touch bare metal).
4. Disable the battery in Computer Setup:
   a. Press the power button.
   b. Press F10 repeatedly to enter Computer Setup.
      i. If F10 is not functional, repeatedly press Esc to access the Startup menu, and then select **BIOS Setup (F10)**.
      ii. If the keyboard is not functional, follow steps to enter Computer Setup from the operating system at https://www.youtube.com/shorts/GdFCKLIPM3o.
   c. From the main setup menu, select **Prepare System for Hardware Change**. If this option is not available, Tamper Lock is enabled. Disable Tamper Lock to proceed.
   d. Select **Confirm** to continue.
5. Select Esc to exit, and then select **Yes** to save changes. The computer shuts down and the battery is disabled.

NOTE: You must connect a power adapter to restart the computer.

Change the keyboard language (if applicable)

To change the keyboard language, use the following steps:

1. Follow step 4b from the previous section to enter Computer Setup.
2. From the main menu, select **Advanced**.
3. Select **Keyboard Part Number Suffix After Replacement**.
4. Check the last 3-4 letters on the part box label for the new keyboard. If the letters match any of the four following codes, select the matching code: JPN2, KOR, BRZL, GR.

   NOTE: If there is no match, select **Others**.

5. To change the keyboard layout and operating system language, follow the steps at: https://support.hp.com/us-en/document/ish_9596154-9596198-16

   - or -

   Changing keyboard layout

NOTE: After installation, go to Diagnostics and select Component tests to confirm that the keyboard is functioning correctly. For more information, see https://support.hp.com/us-en/help/hp-pc-hardware-diagnostics.

NOTE: Keyboard appearance might vary.

1. While pressing down on the key **(1)** next to the Esc key, insert a tool **(2)** under the Esc key, and then twist the tool **(3)** to remove the Esc key **(4)** from the keyboard.

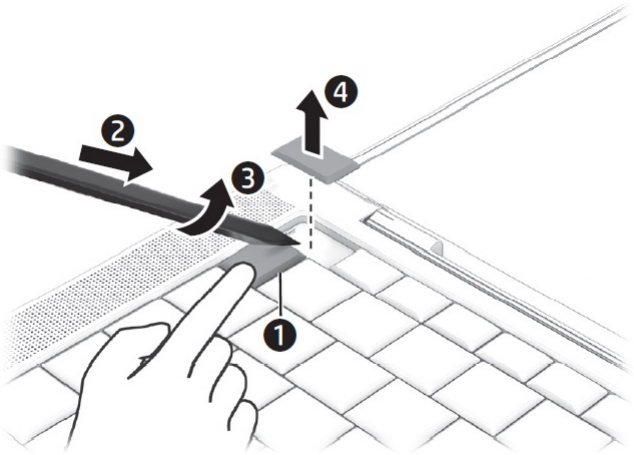

2. Insert a tool **(1)** under the tab on the left side of the Esc key cavity, and then push the tool **(2)** down to lift up the top of the keyboard.

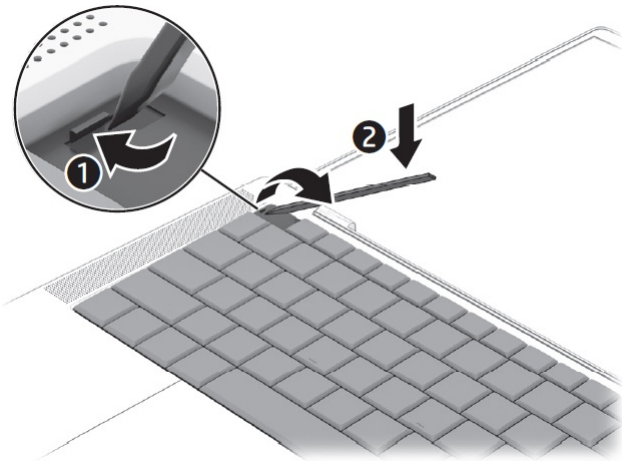

3. Insert a tool **(1)** under the top left of the lifted keyboard, and then pull the tool **(2)** to the right to release the top of the keyboard. Lift the top of the keyboard **(3)** up and over onto the touchpad.

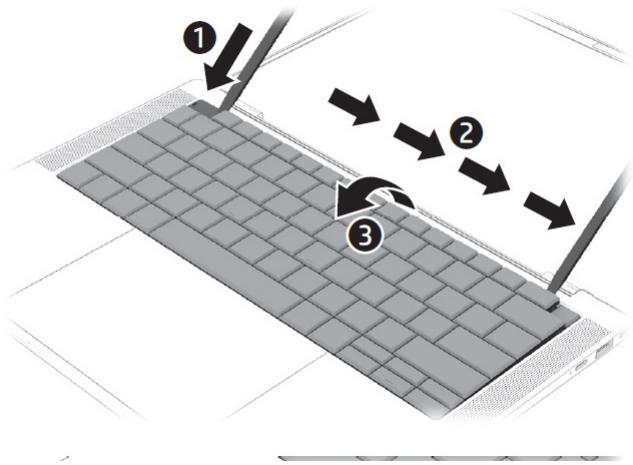

When lifting the keyboard over onto the touchpad, be sure not to accidentally disconnect the two cables from the connectors on the system board.

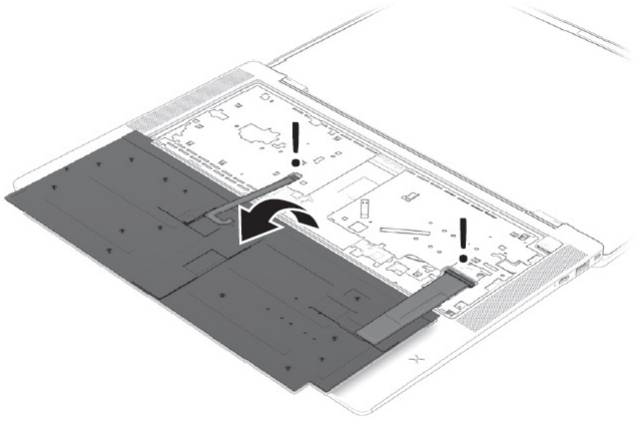

4. Disconnect the two cables from the ZIF connectors on the computer by lifting the latch **(1)** on the connector, and then pulling the cable **(2)** out of the connector. Remove the keyboard

NOTE: *The left backlight cable is available only on select products.

Cable connector locations might vary.

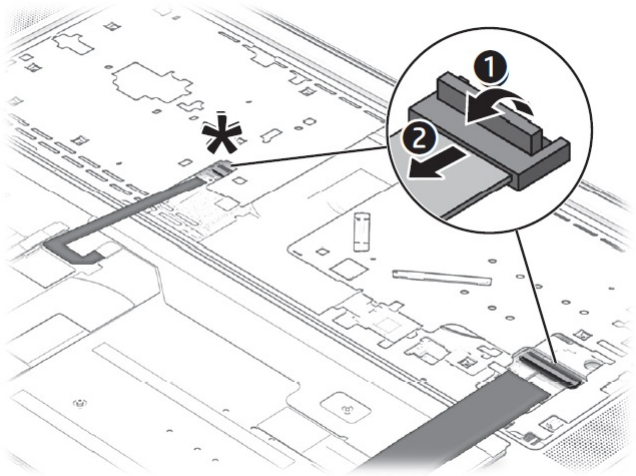

Install the new keyboard:

1. Place the new keyboard **(1)** onto the computer.
2. Remove the covers **(2)** **(3)** from the bottom of the keyboard.
3. Remove the covers **(4)** **(5)** from the cable connectors on the keyboard.

NOTE: The backlight cable **(4)** is available only on select products.

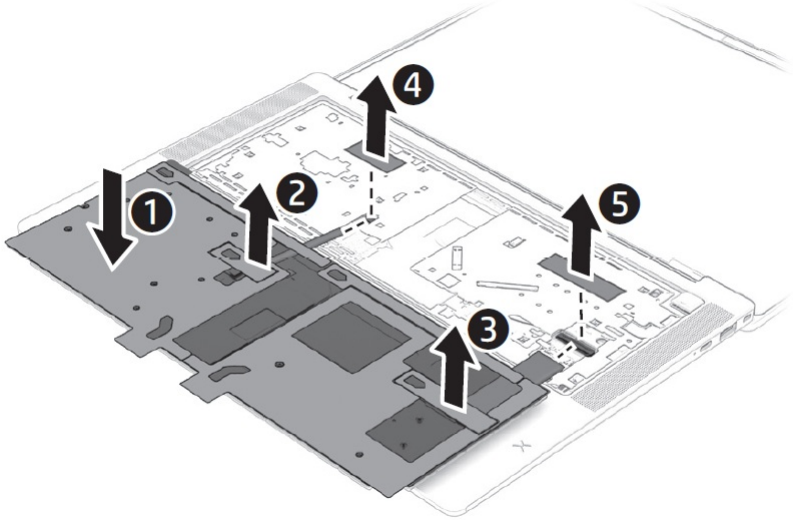

4. Insert the keyboard and backlight cables **(1)** into the connectors on the system board, and then close the latch **(2)** on the connectors.

IMPORTANT: Be sure the cables are securely seated before installing the keyboard.

Cable connector locations might vary.

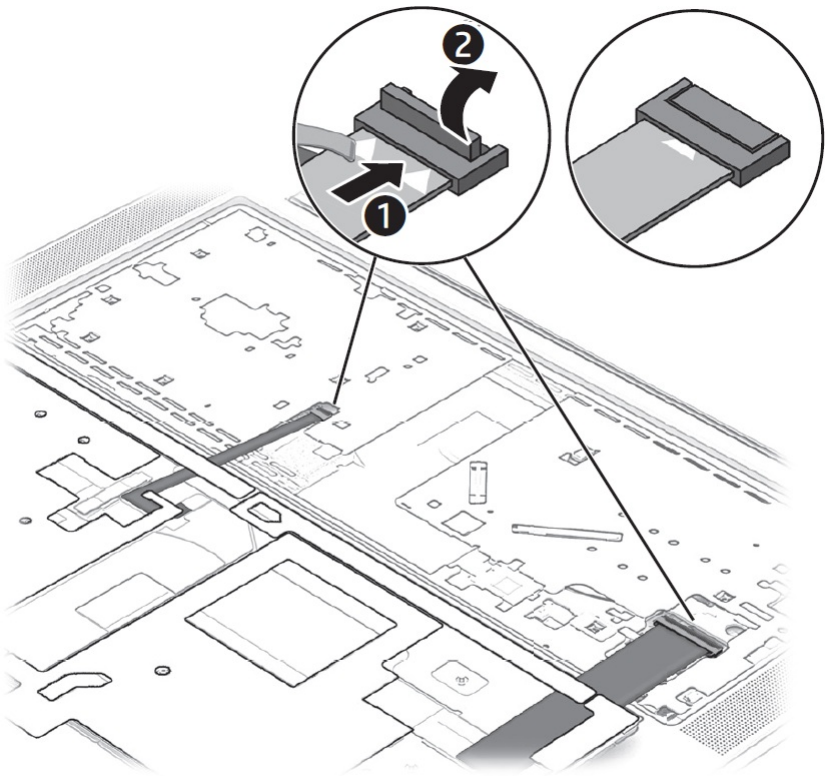

5. Remove the liner from the bottom of the keyboard in the order shown in the following illustration.

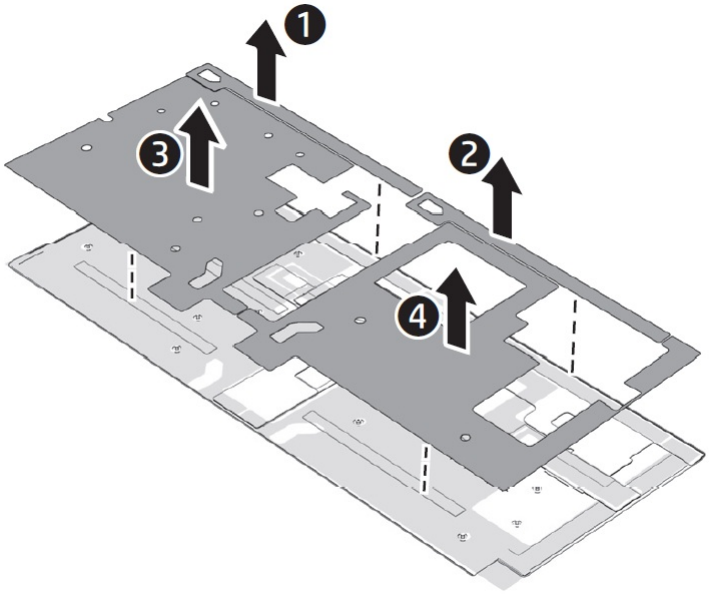

6. Insert the tabs **(1)** on the bottom of the keyboard into slots in the computer, and then push the keyboard **(2)** firmly down into the computer.

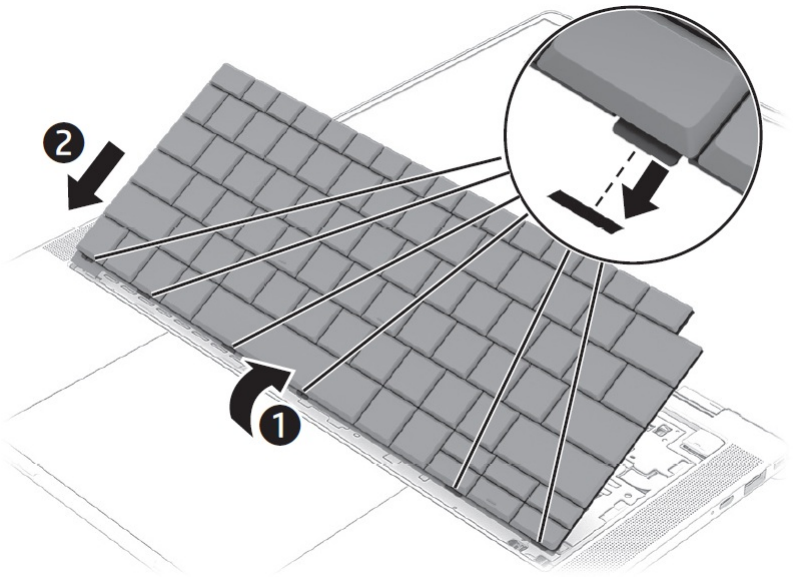

7. With the bottom of the keyboard inserted into the computer, rotate the top of the keyboard down into place.

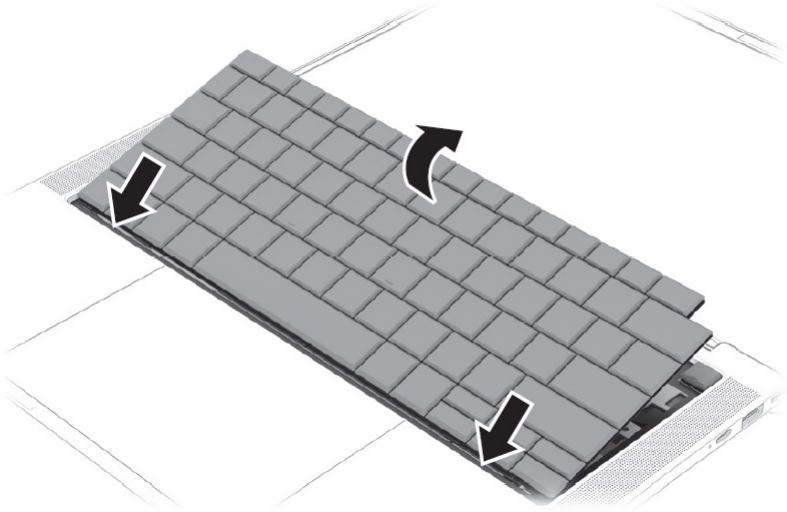

8. Press down on the circles on the keyboard cover to engage the mechanical hooks to the computer.

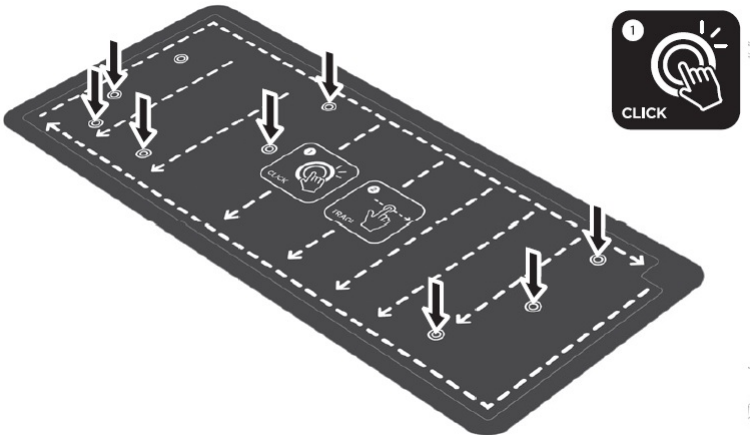

9. Press along the directions of the arrows on the keyboard to adhere it to the computer.

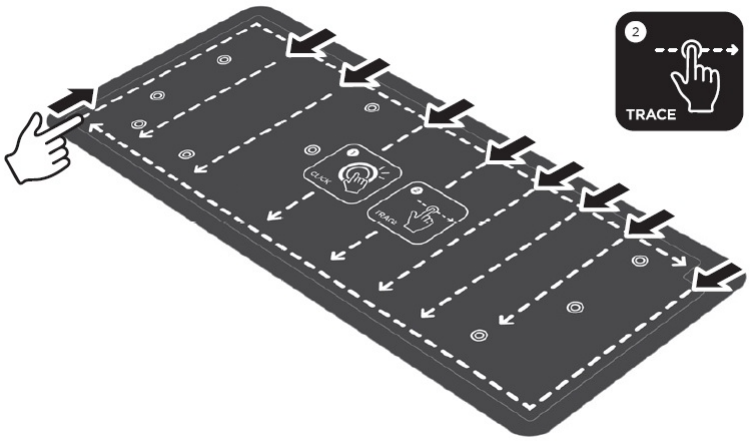

10. Use the block included in the kit to press down firmly and evenly on the keyboard for 20 seconds.

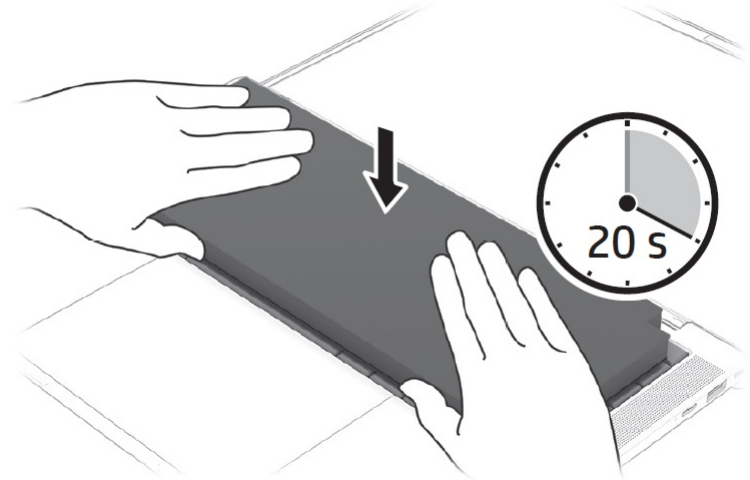

11. Remove the cover from the keyboard.

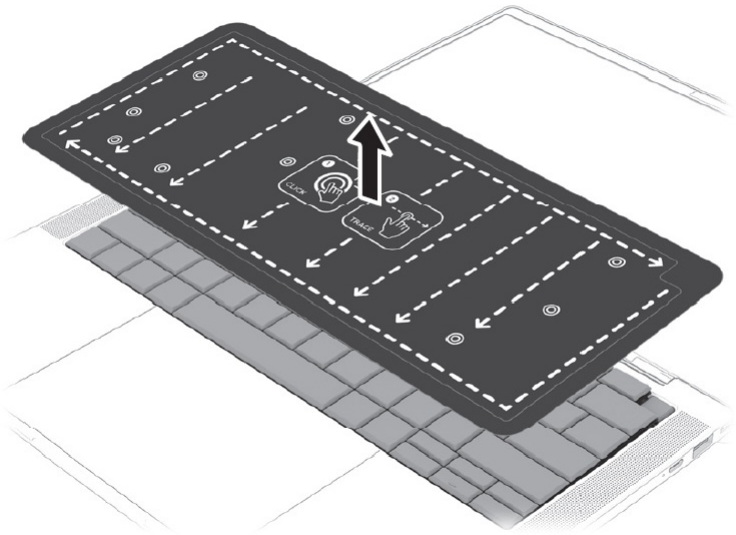

Reverse this procedure to remove the keyboard.

Bottom cover

Use this procedure to remove the bottom cover.

Table 5-3 Bottom cover descriptions and part numbers

Description	Spare part number
Models with WLAN only	Q42118-001
Models with WWAN and WLAN	Q32354-001

Before removing the bottom cover, prepare the computer for disassembly (see Preparation for disassembly on page 32).

Remove the bottom cover:

1. Position the computer upside down.

2. Loosen the five captive Phillips screws on the bottom cover.

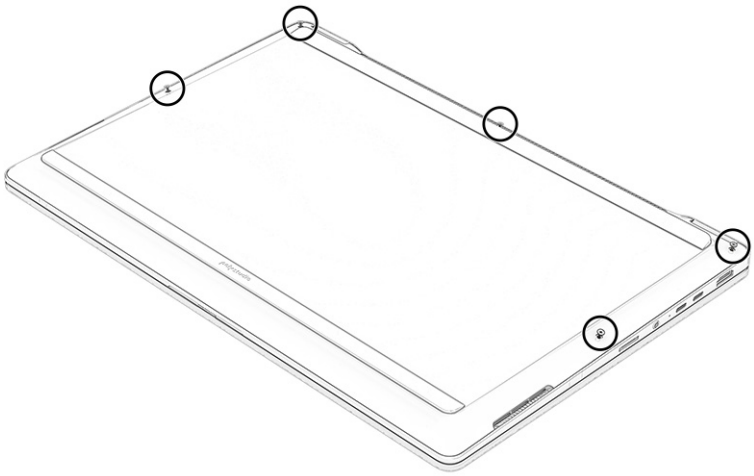

3. Release the bottom edge of the cover **(1)**.
4. Remove the bottom cover **(2)** from the computer

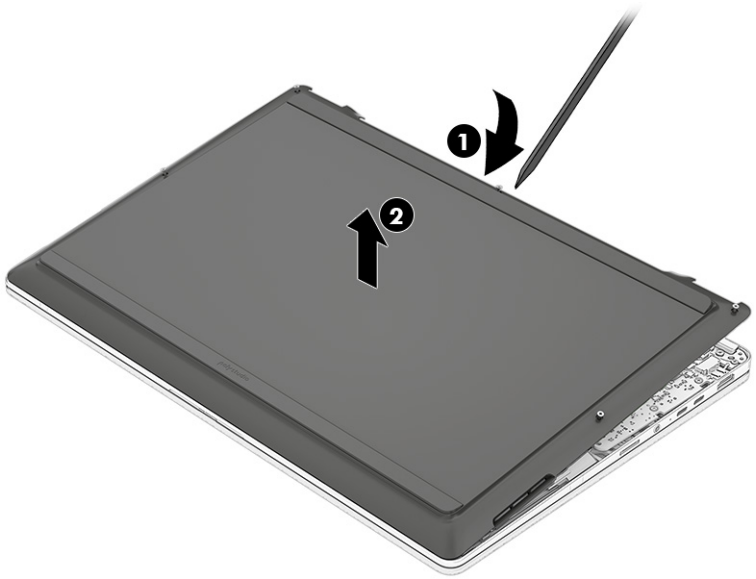

Reverse the removal procedure to install the bottom cover.

When replacing the bottom cover, remove the Feature Byte label from the inside of the old bottom cover and place it on the inside of the new bottom cover. Be sure to keep this label with the computer, because the label is required for any future repairs.

You can locate product labels:

- Laser etched on the old bottom cover.

- In HP System Information by pressing fn + esc when you turn on the computer.

NOTE: Bottom cover appearance might vary.

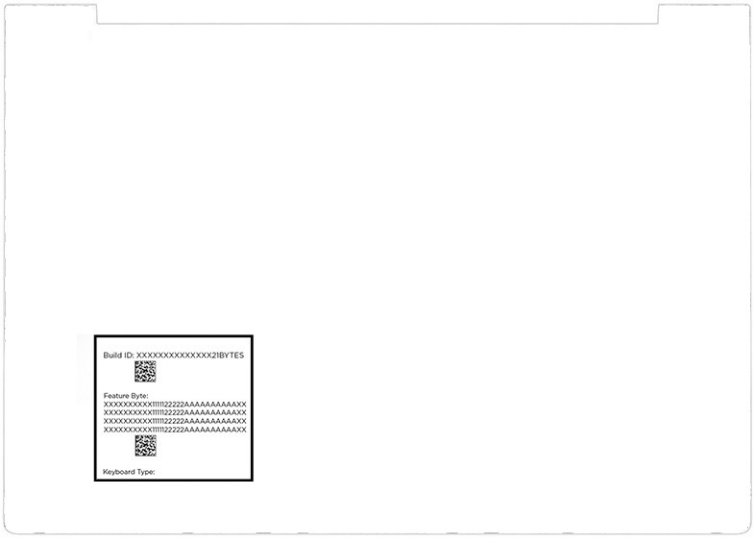

Hand write the product information onto the label of the new bottom cover. Use a ballpoint pen or marker to avoid smudging.

Example of label information



New bottom cover label location

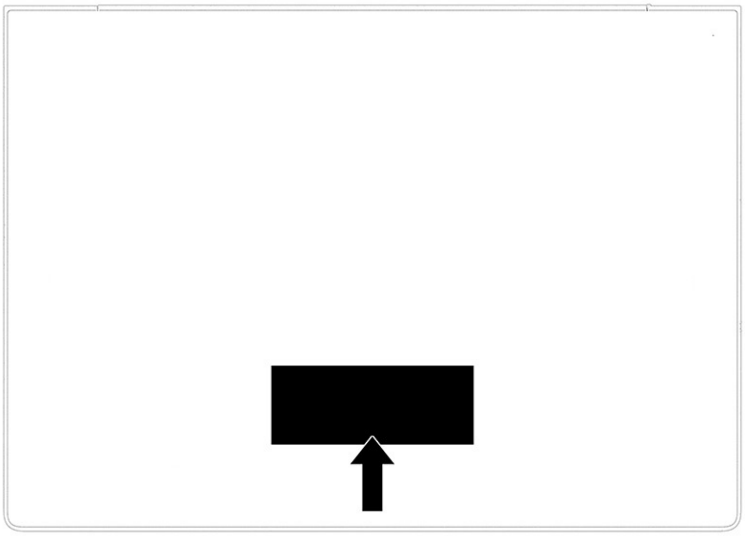

Battery

The battery removal procedure differs depending on whether you are removing and replacing the existing battery or installing a new battery. You must use a revive kit to install a new battery.

- To remove and replace the existing battery, see Removing and reinstalling the same battery on page 44.
- To install a new battery, see Installing a new battery on page 45.

Removing and reinstalling the same battery

Use this procedure to remove the battery and reinstall it.

⚠ **WARNING!** To avoid personal injury and damage to the product:

- Do *not* puncture, twist, or crack the battery.
- Do *not* cause an external puncture or rupture to the battery, which can cause a short inside the battery that can result in battery thermal runaway.
- Do *not* handle or touch the battery enclosure with sharp objects such as tweezers or pliers, which might puncture the battery.
- Do *not* compress or squeeze the battery case with tools or heavy objects stacked on top of the case. These actions can apply undue force on the battery.
- Do *not* touch the connectors with any metallic surface or object, such as metal tools, screws, or coins, which can cause shorting across the connectors.

For additional battery information, see the *Regulatory, Safety, and Environmental Notices*. To access this guide, select the **Search** icon in the taskbar, type `HP Documentation` in the search box, and then select **HP Documentation**.

Before removing the battery, follow these steps:

1. Prepare the computer for disassembly (see Preparation for disassembly on page 32).

2. Remove the bottom cover (see Bottom cover on page 41).

WARNING! To reduce potential safety issues, use only the user-replaceable battery provided with the computer, a replacement battery provided by HP, or a compatible battery purchased from HP.

IMPORTANT: Removing a battery that is the sole power source for the computer can cause loss of information. To prevent loss of information, save your work or shut down the computer through Windows before you remove the battery.

Remove the battery:

1. Use the plastic tab **(1)** on the connector to lift the cable **(2)** straight up to disconnect it from the system board.
2. Loosen four captive Phillips screws **(3)** that secure the battery to the computer.
3. Remove the battery **(4)** from the computer.

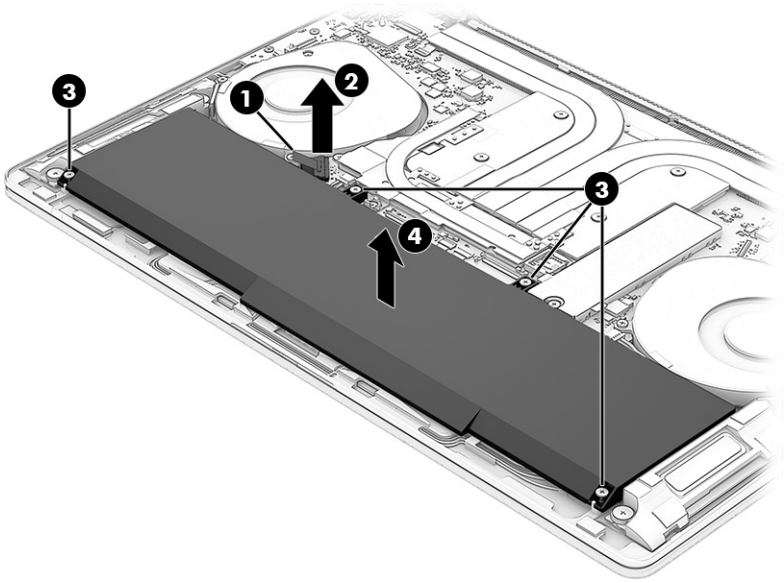

Reverse the removal procedures to reinstall the battery.

NOTE: When replacing the battery, be sure to completely reassemble the computer and plug in the AC adapter before turning the computer on.

Installing a new battery

Use this procedure to install a battery. You must use a revive kit to remove the old battery and install a new one. The revive kit includes an empty containment tray and a containment tray with a battery preinstalled.

Table 5-4 Battery description and part number

Description	Spare part number
Battery (includes revive kit)	P84280-001

Before starting this replacement procedure:

- Ensure other individuals are sufficiently clear of your workspace.
- Ensure your workspace is clear of any flammable material such as paper or oils.
- Locate the nearest ABC dry chemical fire extinguisher for use in an emergency.

WARNING! This procedure requires removing the battery or disconnecting the battery cable. Use care to avoid bending, twisting, or puncturing the battery regardless of its condition. Failure to follow this replacement guide or to use HP recommended tools might damage the system and/or cause a safety hazard.

- Do *not* remove the battery from the containment tray.
- Do *not* handle or touch the battery enclosure with sharp objects such as tweezers or pliers, which might puncture the battery.
- Do *not* touch the connectors with any metallic surface or object, such as metal tools, screws, or coins, which can cause shorting across the connectors.

Should a part become stuck or difficult to remove when opening a unit where a swollen battery is suspected, or if the battery becomes stuck in the unit, stop, and contact HP Support for assistance. Do not try to remove a battery by force.

NOTE: Screw locations, latch locations, and internal components might vary.

Before removing the battery, follow these steps:

1. Prepare the computer for disassembly (see Preparation for disassembly on page 32).
2. Remove the bottom cover (see Bottom cover on page 41).

WARNING! To reduce potential safety issues, use only the user-replaceable battery provided with the computer, a replacement battery provided by HP, or a compatible battery purchased from HP.

IMPORTANT: Removing a battery that is the sole power source for the computer can cause loss of information. To prevent loss of information, save your work or shut down the computer through Windows before you remove the battery.

1. Remove the battery using the revive kit:
   a. Disconnect the battery cable from the system board. The connector location might vary.

      NOTE: You can disconnect the cable from the battery. The battery spare part kit does not come with the battery cable, so be sure to use the old battery cable or order a new battery cable when replacing the battery.

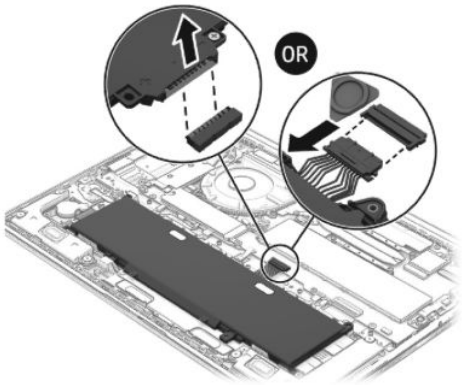

b. Open the empty battery containment tray.



c. Remove the paper backing layer from the adhesive on the tray.

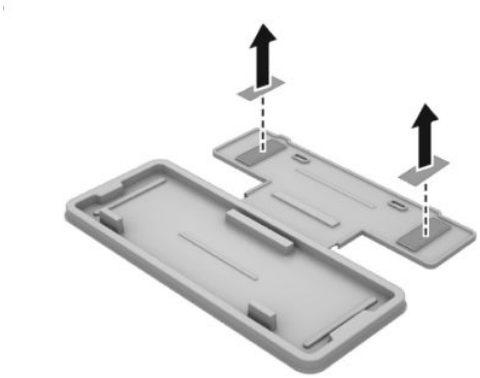

d. Turn the tray **(1)** over so that the adhesive is facing down.

e. Place the tray **(2)** centered on the battery.

f. Press down on the indentations on the tray **(3)** to adhere it to the battery.

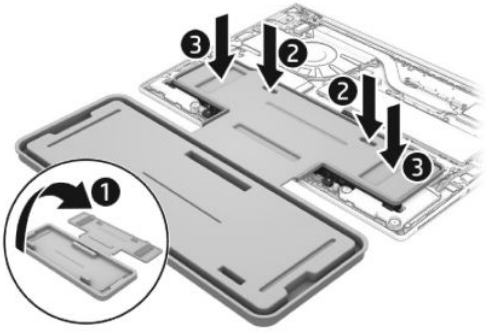

g. Remove the Phillips screws **(1)** that secure the battery to the computer. Number of screws and screw locations might vary.

h. Remove the bracket from the upper right corner of the battery.

i. Lift the top of the tray **(2)** to remove the battery from the computer.

NOTE: You might have to lift the bottom left of the battery up slightly then rotate it counterclockwise to remove it.

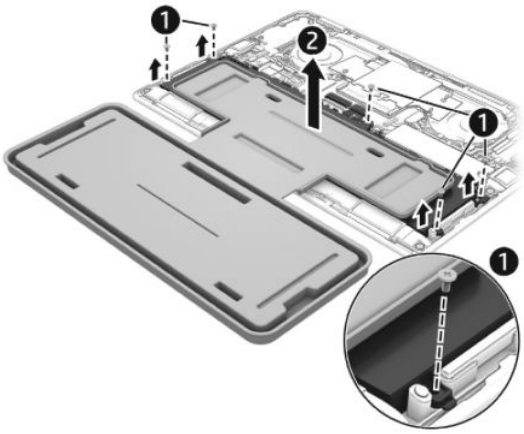

j. Rotate the battery up and over into the cavity of the containment tray.

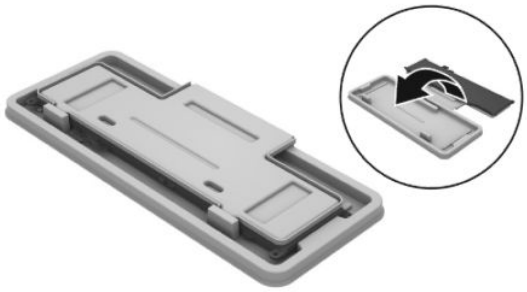

NOTE: Please recycle responsibly. For more information about recycling programs, see the HP website at http://www.hp.com/recycle.

2. Install the battery using the revive kit:

a. Open the containment tray that includes the new battery.

b. Turn the tray **(1)** over so the battery is facing downward, and then insert the battery **(2)** into the computer. Adhesive secures the battery to the tray.

NOTE: You might have to rotate the battery clockwise as you insert it to insert the tab on the battery under the SSD.

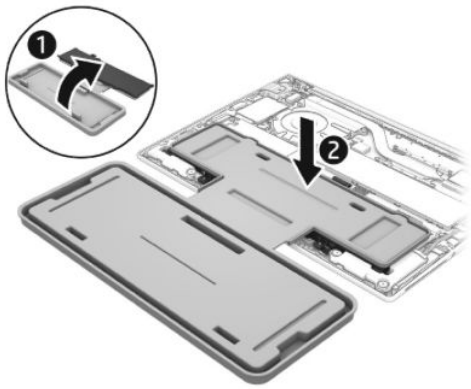

c. Install the bracket on the upper right corner of the battery.

d. Install the Phillips screws **(1)** to secure the battery. Number of screws and screw locations might vary.

e. Lift the containment tray **(2)** off the battery.

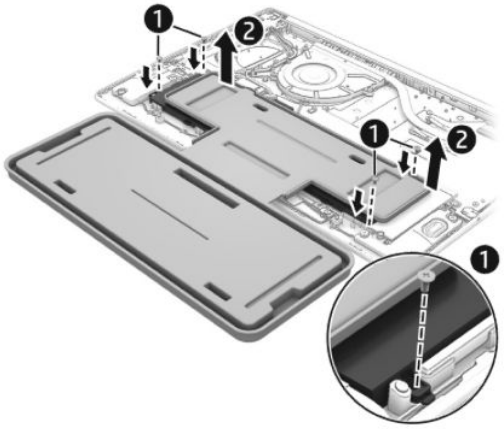

f. Connect the battery cable to the system board. The connector location might vary.

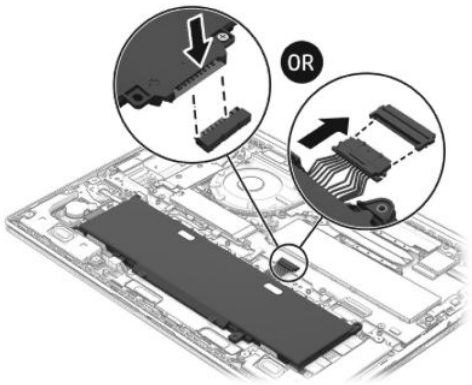

NOTE: When replacing the battery, be sure to completely reassemble the computer and plug in the AC adapter before turning the computer on.

Solid-state drive

Use this procedure to remove the SSD.

Table 5-5 SSD descriptions and part numbers

Description	Spare part number
4 TB, PCIe-5 × 4, TLC	Q06808-001
2 TB, PCIe-5 × 4, TLC	P41682-001
1 TB, PCIe-5 × 4, TLC	P32587-001
1 TB, PCIe-5 × 4, TLC, SED	P90257-001
512 GB, PCIe-5 × 4	P73029-001
512 GB, PCIe-5 × 4, SED	P86946-001
SSD bracket	Q32356-001

Before removing the SSD, follow these steps:

1. Prepare the computer for disassembly (see Preparation for disassembly on page 32).
2. Remove the bottom cover (see Bottom cover on page 41).
3. Disconnect the battery cable from the system board (see Removing and reinstalling the same battery on page 44).

Remove the SSD:

1. Remove any tape that secures the SSD bracket.
2. Remove the Phillips M2.0 × 3.0 screw **(1)** that secures the SSD cover.
3. Lift the bracket **(2)** off the SSD.

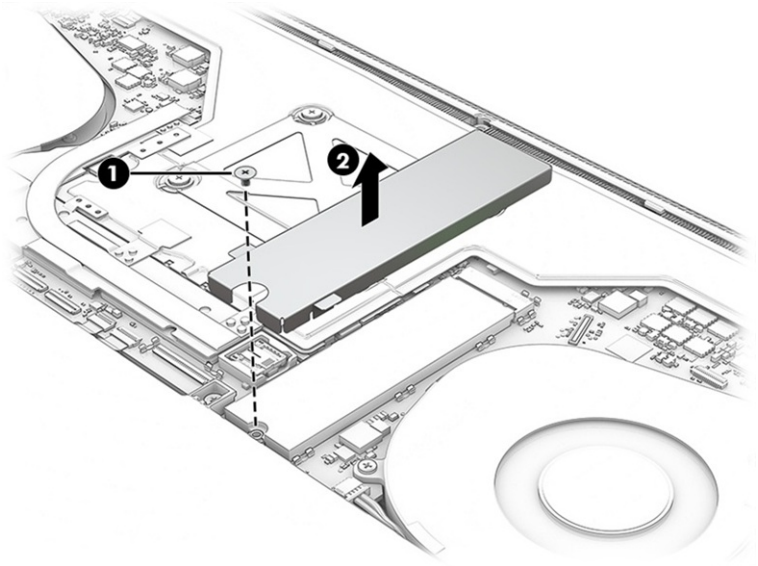

4. Pull the SSD out of the socket.

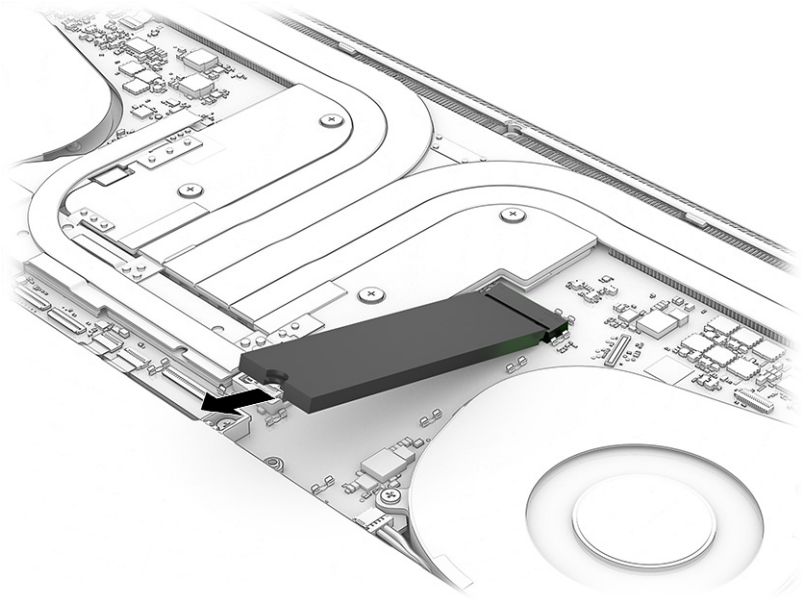

Reverse the removal procedures to install an SSD.

NOTE: SSDs are designed with a notch to prevent incorrect insertion.

6 Removal and replacement procedures for authorized service provider parts

This chapter provides removal and replacement procedures for authorized service provider parts.

IMPORTANT: Only an authorized service provider should access the components described in this chapter. Accessing these parts can damage the computer or void the warranty.

NOTE: Details about your computer, including model, serial number, product key, and length of warranty, are on the service tag at the bottom of your computer.

NOTE: The HP Support YouTube Channel (in English) has videos that provide step-by-step removal and replacement instructions for many common parts and models.

Component replacement procedures

Use the procedures described in this section to remove and replace computer components.

NOTE: HP continually improves and changes product parts. For complete and current information about supported parts for your computer, go to https://partsurfer.hp.com/, select your country or region, and then follow the on-screen instructions.

Make special note of each screw size and location during removal and replacement.

WWAN module (select products only)

Use this procedure to remove the WWAN module.

Table 6-1 WWAN module descriptions and part numbers

Description	Spare part number
HP RW220-GL LTE (CAT-1bis)	P47161-005
MediaTek T900 5G NR	P62206-005
MediaTek T900 5G NR with HP Go	P62207-005
WWAN module bracket	Q32343-001

IMPORTANT: To prevent an unresponsive system, replace the wireless module only with a wireless module authorized for use in the computer by the governmental agency that regulates wireless devices in your country or region. If you replace the module and then receive a warning message, remove the module to restore device functionality, and then contact technical support.

Before removing the WWAN module, follow these steps:

1. Prepare the computer for disassembly (see Preparation for disassembly on page 32).
2. Remove the bottom cover (see Bottom cover on page 41).

3. Disconnect the battery cable from the system board (see Removing and reinstalling the same battery on page 44).

Remove the WWAN module:

1. Peel the antenna protector **(1)** off the module. Leave the other end of the protector connected to the computer.
2. Disconnect the antenna cables **(2)** from the terminals on the module. The number of antenna cables can vary.
3. Remove the Phillips M2.0 × 3.0 screw **(3)** that secures the module. The module tilts up.
4. Remove the module **(4)** by pulling it away from the slot at an angle.

NOTE: Antenna cable colors might vary. When installing a WWAN module, be sure to match the number on the cable with the number next to the connector on the module.

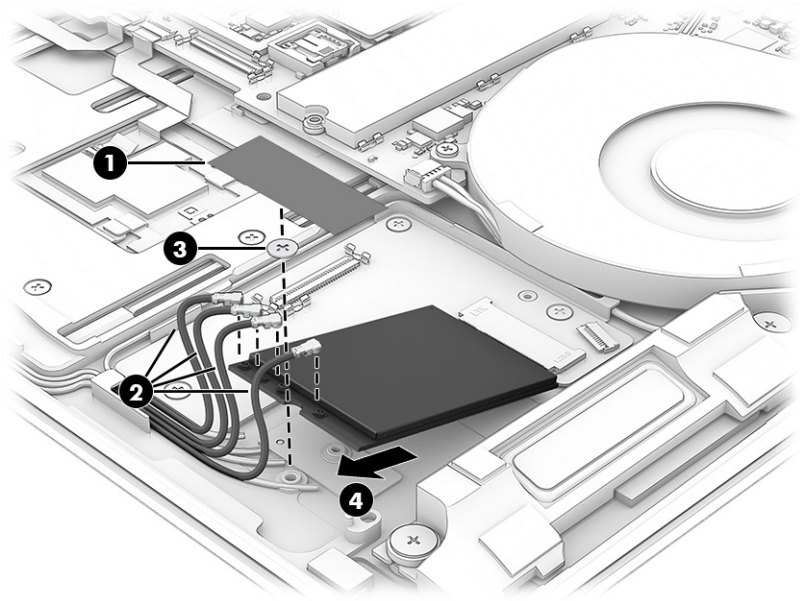

5. If the WWAN antenna is not connected to the terminal on the WWAN module, a protective sleeve must be installed on the antenna connector, as shown in the following illustration.

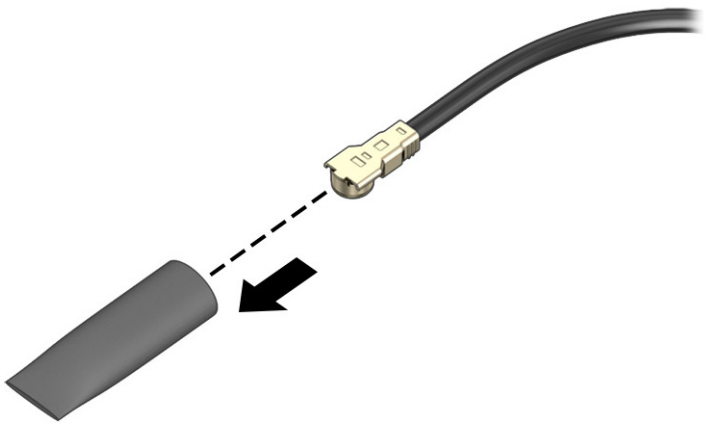

Reverse this procedure to install the WWAN module.

WWAN board (select products only)

Use this procedure to remove the WWAN board.

Table 6-2 WWAN board description and part number

Description	Spare part number
WWAN board	Q32342-001

Before removing the WWAN board, follow these steps:

1. Prepare the computer for disassembly (see Preparation for disassembly on page 32).
2. Remove the bottom cover (see Bottom cover on page 41).
3. Remove the battery (see Removing and reinstalling the same battery on page 44).
4. Remove the WWAN module (see WWAN module (select products only) on page 53).

Remove the WWAN board:

1. Use the tab to remove the cover **(1)** from the connector on the WWAN board.
2. Disconnect the cable from the ZIF connector **(2)** on the board
3. Disconnect the SIM board cable from the ZIF connector **(3)** on the board
4. Remove the three Phillips M2.0 × 3.0 screws **(4)**.
5. Use a tool **(5)** to release the board from the computer.

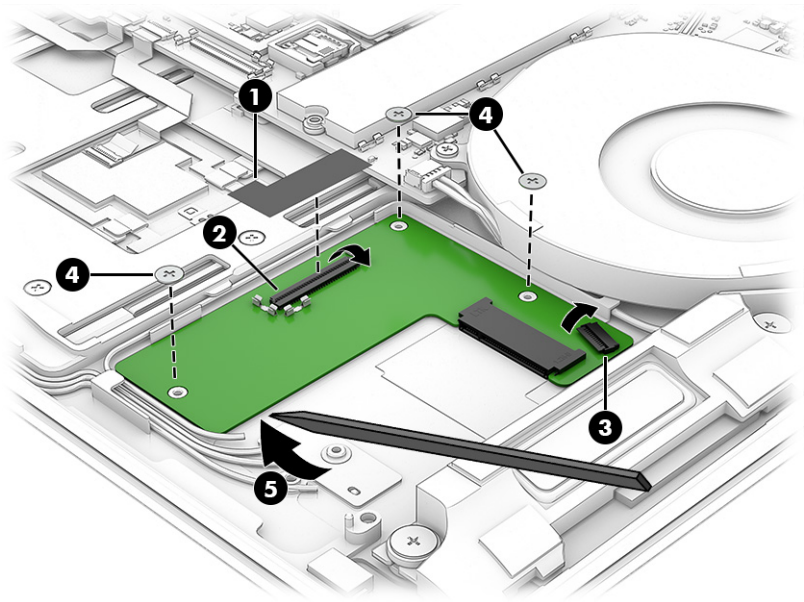

Reverse this procedure to install the WWAN board.

Fans

Use this procedure to remove the fans.

Table 6-3 Fans description and part number

Description	Spare part number
Fan Kit (includes left and right fans)	Q32345-001

Before removing the fans, follow these steps:

1. Prepare the computer for disassembly (see Preparation for disassembly on page 32).
2. Remove the bottom cover (see Bottom cover on page 41).
3. Disconnect the battery cable from the system board (see Removing and reinstalling the same battery on page 44).

Remove the fans:

1. Disconnect the fan cables **(1)** from the system board.
2. Loosen three captive Phillips screws **(2)** that secure each fan.
3. Remove the fans **(3)** from the computer.

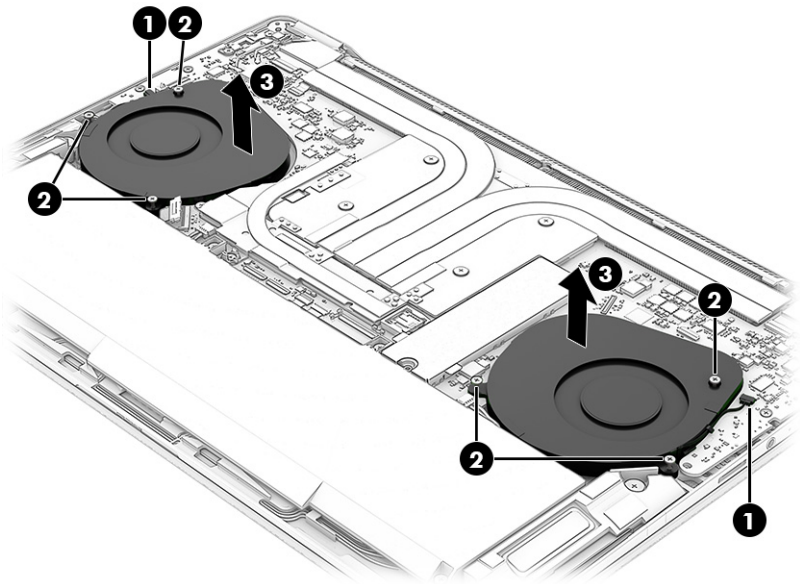

Reverse this procedure to install the fans.

Heat sink

Use this procedure to remove the heat sink.

Table 6-4 Heat sink descriptions and part numbers

Description	Spare part number
Models with 6/8 core processors	Q32346-001
Models with 12/16 core processors	Q38771-001

Before removing the heat sink, follow these steps:

1. Prepare the computer for disassembly (see Preparation for disassembly on page 32).
2. Remove the bottom cover (see Bottom cover on page 41).
3. Remove the battery (see Removing and reinstalling the same battery on page 44).

Remove the heat sink:

1. Loosen the four captive Phillips screws **(1)** from the heat sink.
2. Remove the Phillips M2.0 × 3.0 screw **(2)** from the heat sink.
3. Remove the Phillips M2.0 × 3.0 screw **(3)** that fits into a plastic holder from the heat sink.
4. Remove the heat sink **(4)** from the system board.

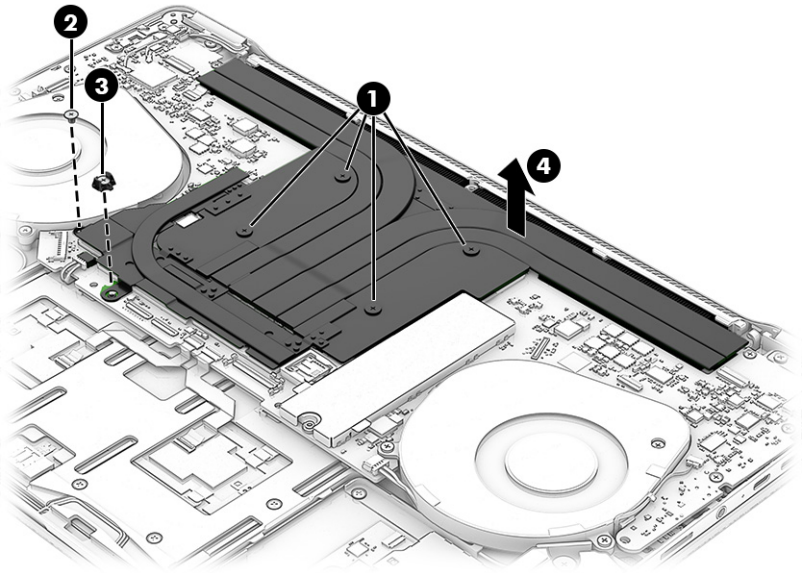

5. Note that the screw on the bottom of the heat sink fits into a plastic holder. Be sure the holder is installed when you install the heat sink screw.

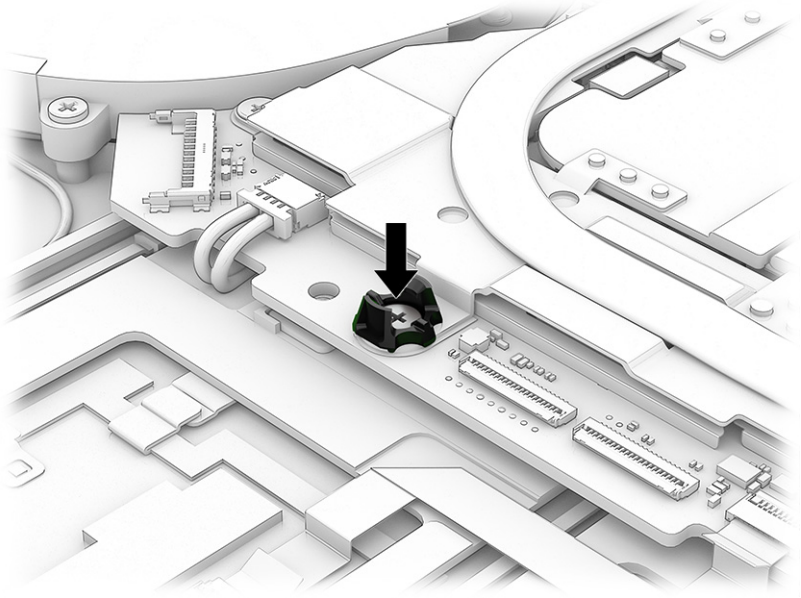

6. Thoroughly clean and replace the gray thermal paste **(1)** and confirm installation of the thermal pads **(2)** on the heat sink each time it is removed.

   Each time the heat sink is removed, thoroughly clean and replace the gray thermal grease from the surfaces of the heat sink and system board. Thoroughly clean the gray thermal grease from system boards that you plan to recycle, because the gray grease will no longer be in a sealed space.

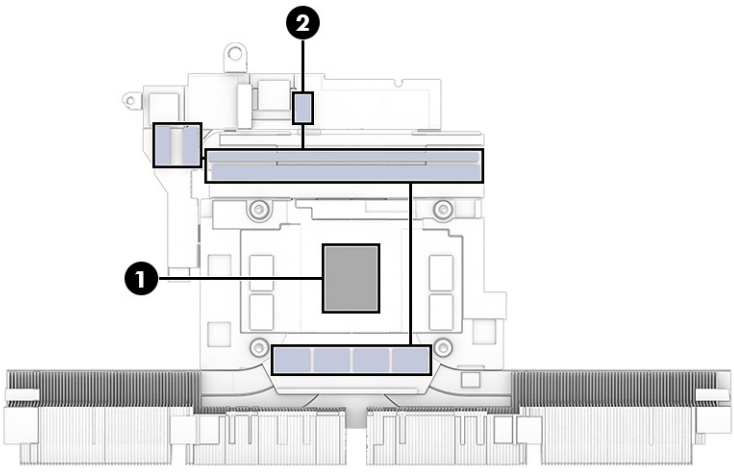

Reverse this procedure to install the heat sink.

System board

Use these procedures to remove the system board.

Table 6-5 System board descriptions and part numbers

Description	Spare part number
AMD Ryzen AI Max+ PRO 495 and 192 GB system memory	Q29692-601
AMD Ryzen AI Max+ PRO 495 and 192 GB system memory (PRC)	Q29707-601
AMD Ryzen AI Max+ PRO 495 and 128 GB system memory	Q29691-601
AMD Ryzen AI Max+ PRO 495 and 128 GB system memory (PRC)	Q29706-601
AMD Ryzen AI Max+ PRO 495 and 64 GB system memory	Q29693-601
AMD Ryzen AI Max PRO 495 and 192 GB system memory (WWAN models)	Q29713-601
AMD Ryzen AI Max PRO 495 and 128 GB system memory (WWAN models)	Q29712-601
AMD Ryzen AI Max PRO 495 and 128 GB system memory (no WLAN, no Bluetooth models)	Q29708-601
AMD Ryzen AI Max PRO 495 and 64 GB system memory (WWAN models)	Q29714-601
AMD Ryzen AI Max PRO 490 and 192 GB system memory	Q29702-601
AMD Ryzen AI Max PRO 490 and 64 GB system memory	Q29705-601
AMD Ryzen AI Max PRO 490 and 32 GB system memory	Q29703-601
AMD Ryzen AI Max PRO 490 and 32 GB system memory (PRC)	Q29704-601
AMD Ryzen AI Max PRO 490 and 192 GB system memory (WWAN models)	Q29716-601
AMD Ryzen AI Max PRO 490 and 128 GB system memory (WWAN models)	Q29715-601
AMD Ryzen AI Max PRO 490 and 64 GB system memory (WWAN models)	Q29710-601
AMD Ryzen AI Max PRO 485 and 64 GB system memory	Q29700-601
AMD Ryzen AI Max PRO 485 and 64 GB system memory (PRC)	Q29701-601
AMD Ryzen AI Max PRO 485 and 32 GB system memory	Q29699-601
AMD Ryzen AI Max PRO 485 and 32 GB system memory (WWAN models)	Q29709-601
AMD Ryzen AI Max PRO 480 and 16 GB system memory	Q29698-601
AMD Ryzen AI Max 495 and 128 GB system memory (WWAN models)	Q29711-601
AMD Ryzen AI Max 495 and 64 GB system memory	Q29690-601
AMD Ryzen AI Max 490 and 64 GB system memory	Q29696-601
AMD Ryzen AI Max 490 and 64 GB system memory (PRC)	Q29697-601
AMD Ryzen AI Max 485 and 32 GB system memory	Q29694-601
AMD Ryzen AI Max 485 and 32 GB system memory (PRC)	Q29695-601

Before removing the system board, follow these steps:

1. Prepare the computer for disassembly (see Preparation for disassembly on page 32).
2. Remove the bottom cover (see Bottom cover on page 41).
3. Remove the battery (see Removing and reinstalling the same battery on page 44).
4. Remove the SSD (see Solid-state drive on page 50).

5. Remove the fans (see Fans on page 55).
6. Remove the heat sink (see Heat sink on page 56).

Remove the system board:

1. Disconnect the following cables from the system board:
   - WLAN antenna cables **(1)**
   - Display cable (ZIF) **(2)**
   - Power button board cable (ZIF) **(3)**
   - Display cable (ZIF) **(4)**
   - Right speaker cable **(5)**
   - WWAN board cable **(6)** (select products only)
   - Touchpad cable (ZIF) **(7)**
   - Touchpad cable (ZIF) **(8)**
   - Left speaker cable **(9)**
   - SD card cable (ZIF) **(10)**

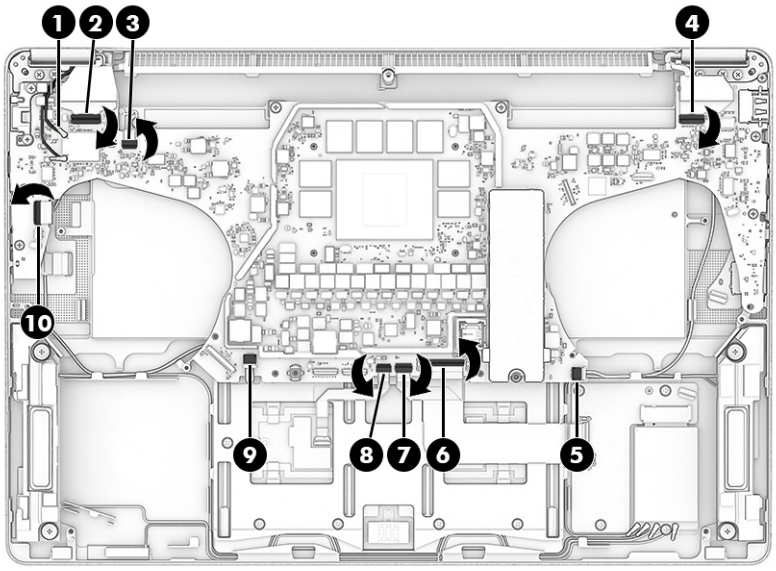

2. Remove two Phillips M2.0 × 4.0 screws **(1)** from the system board bracket, and then remove the bracket **(2)**.

3. Remove nine Phillips M2.0 × 3.0 screws **(3)** from the system board.

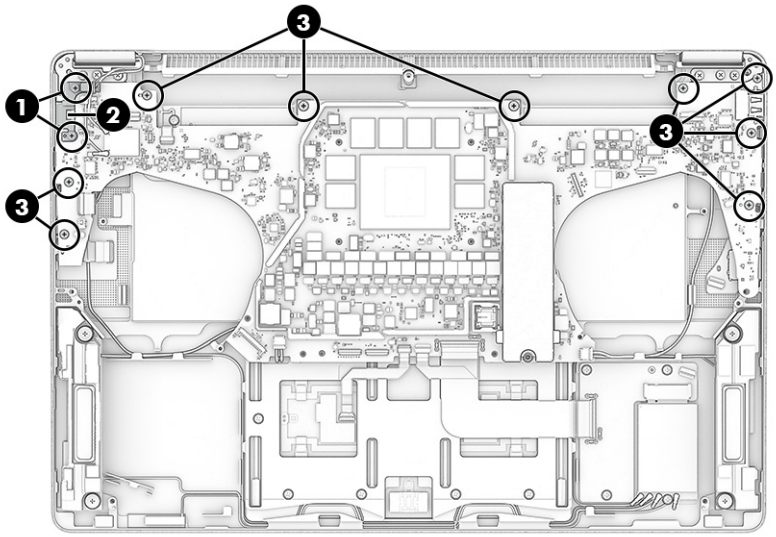

4. Note that two cables connect to the bottom of the system board. Lift the left side of the board **(1)** up and pull it **(2)** to the left and up to remove it, then place it upside down so you can access the cable connectors underneath.

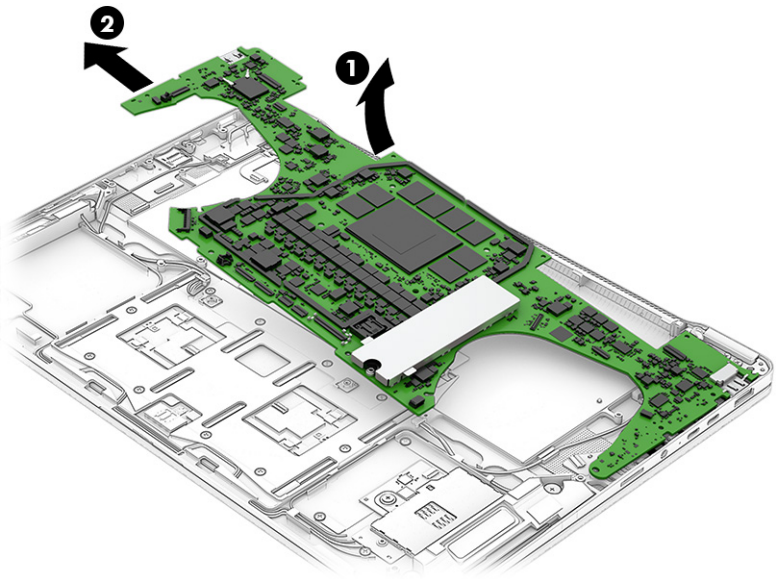

5. Disconnect the keyboard cable (ZIF) **(1)** and the keyboard backlight cable (ZIF) **(2)** from the bottom of the system board.

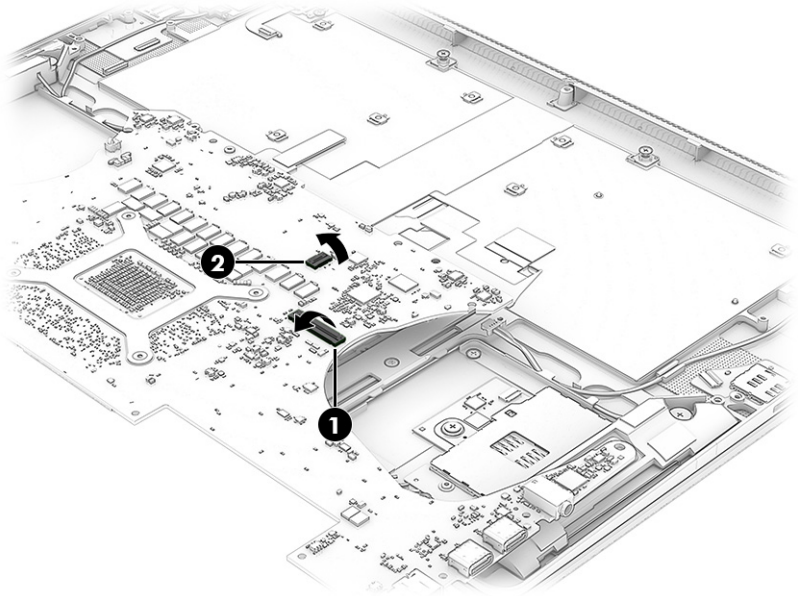

Reverse this procedure to install a system board.

Speakers

Use this procedure to remove the speakers.

Table 6-6 Speaker description and part number

Description	Spare part number
Speaker Kit	Q32349-001

Before removing the speakers, follow these steps:

1. Prepare the computer for disassembly (see Preparation for disassembly on page 32).
2. Remove the bottom cover (see Bottom cover on page 41).
3. Remove the battery (see Removing and reinstalling the same battery on page 44).
4. Remove the system board (see System board on page 58).

Remove the speakers:

1. Remove two Phillips M1.2 × 1.2 screws **(1)** that secure each bottom speaker.
2. Remove one Phillips M1.2 × 1.2 screw **(2)** that secures each top speaker (tweeter).
3. Remove the right speaker cable from the clip **(3)**.
4. Peel up the tape **(4)** that secures the left speaker cable.
5. Remove the left cable **(5)** from the channel and clip.

6. Remove the speakers **(6)** from the computer.

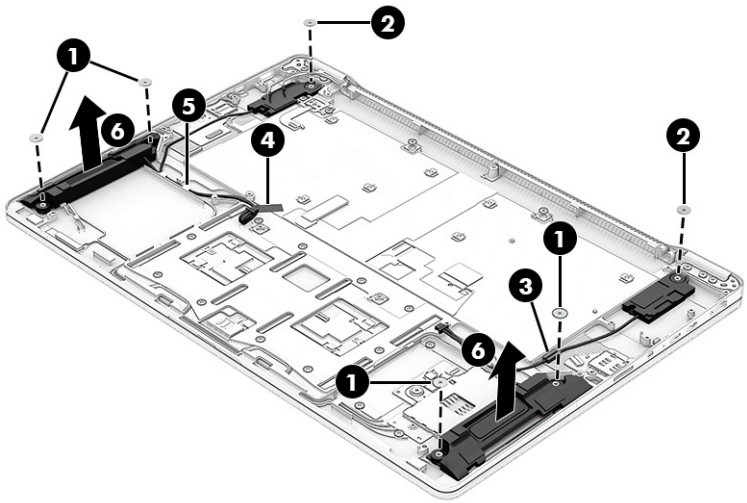

Reverse this procedure to install the speakers.

To install the top left speaker, place the grommet **(1)** on the top of the speaker onto the post and rotate the speaker **(2)** so it slides under the left side of the power button assembly.

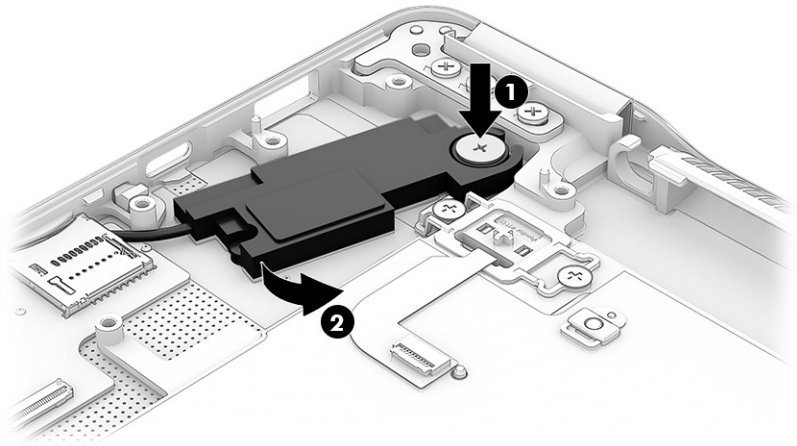

SIM board (select products only)

Use this procedure to remove the SIM board.

Table 6-7 SIM board description and part number

Description	Spare part number
SIM board (includes cable)	Q32348-001

Before removing the SIM board, follow these steps:

1. Prepare the computer for disassembly (see Preparation for disassembly on page 32).
2. Remove the bottom cover (see Bottom cover on page 41).
3. Remove the battery (see Removing and reinstalling the same battery on page 44).
4. Remove the right speaker (see Speakers on page 62).
5. Remove the system board (see System board on page 58).

Remove the SIM board:

1. Remove the SIM card holder **(1)** from the SIM slot.
2. Use a tool **(2)** to release the SIM board **(3)** from the computer.

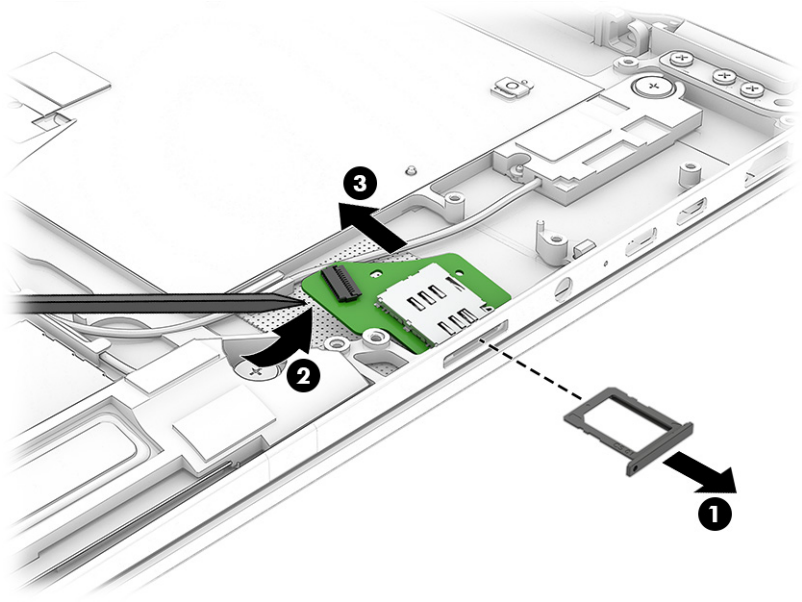

Reverse this procedure to install the SIM board.

SD card board

Use this procedure to remove the SD card board.

Table 6-8 SD card board description and part number

Description	Spare part number
SD card board (includes cable)	Q32347-001

Before removing the SD card board, follow these steps:

1. Prepare the computer for disassembly (see Preparation for disassembly on page 32).
2. Remove the bottom cover (see Bottom cover on page 41).
3. Remove the battery (see Removing and reinstalling the same battery on page 44).

4. Remove the system board (see System board on page 58).

Remove the SD card board:

- Use a tool **(1)** to release the inside of the board and then remove the board **(2)** from the computer.

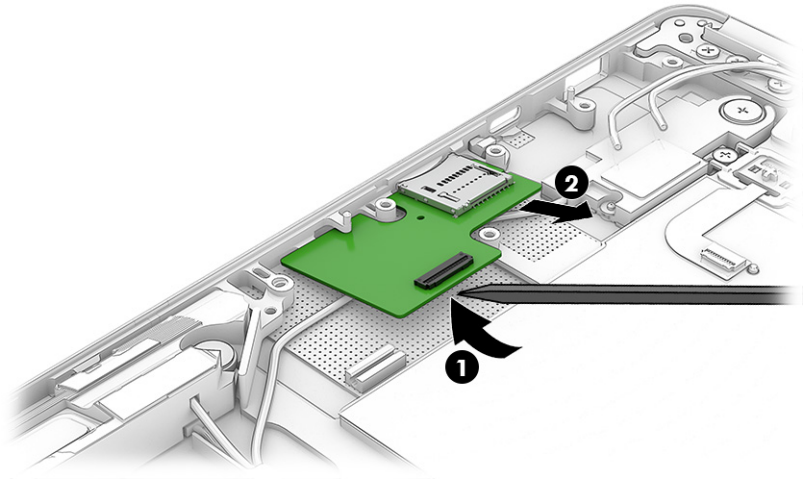

Reverse this procedure to install the SD card board.

Power button/fingerprint reader assembly

Use this procedure to remove the power button/fingerprint reader assembly.

Table 6-9 Power button/fingerprint reader assembly description and part number

Description	Spare part number
Power button/fingerprint reader assembly (includes cable)	Q32344-001

Before removing the power button/fingerprint reader assembly, follow these steps:

1. Prepare the computer for disassembly (see Preparation for disassembly on page 32).
2. Remove the bottom cover (see Bottom cover on page 41).
3. Remove the battery (see Removing and reinstalling the same battery on page 44).
4. Remove the system board (see System board on page 58).

Remove the power button/fingerprint reader assembly:

- Remove two Phillips M1.4 × 1.0 screws **(1)**. and then lift up on the bottom of the assembly **(2)** to release it from the tape.

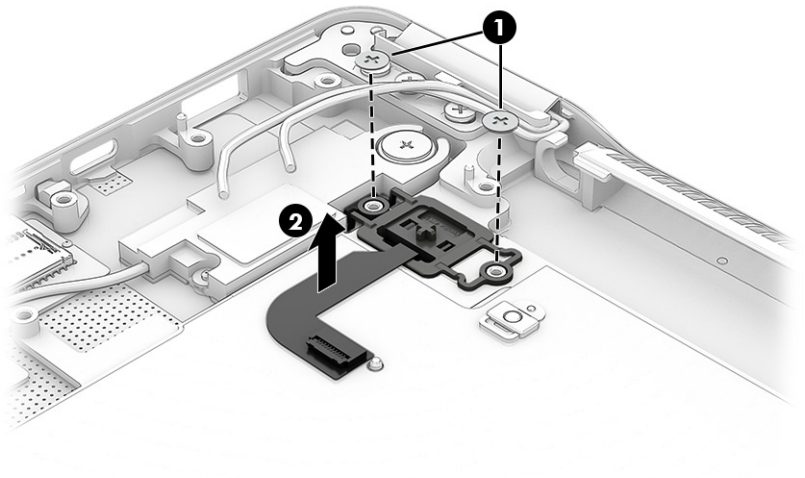

Reverse this procedure to install the power button/fingerprint reader assembly.

Touchpad

Use this procedure to remove the touchpad.

Table 6-10 Touchpad description and part number

Description	Spare part number
Touchpad (includes cable)	Q32352-001

Before removing the touchpad, follow these steps:

1. Prepare the computer for disassembly (see Preparation for disassembly on page 32).
2. Remove the bottom cover (see Bottom cover on page 41).
3. Remove the battery (see Removing and reinstalling the same battery on page 44).
4. Remove the system board (see System board on page 58).

Remove the touchpad:

1. Disconnect both cables from the ZIF connectors **(1)** on the touchpad.
2. Remove the 10 Phillips M1.4 × 1.0 screws **(2)** from the touchpad.
3. Lift the computer **(3)** off the touchpad.

NOTE: The touchpad is removed from under the computer in this procedure.

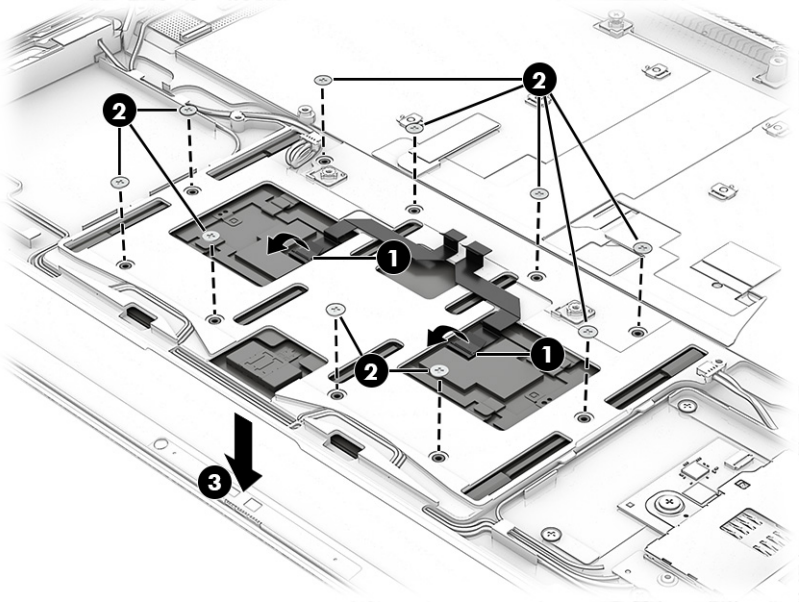

Reverse the removal procedure to install the touchpad.

WWAN antennas (select products only)

Use this procedure to remove the WWAN antennas.

Table 6-11 WWAN antennas description and part number

Description	Spare part number
WWAN antennas	Q32338-001

Before removing the WWAN antennas, follow these steps:

1. Prepare the computer for disassembly (see Preparation for disassembly on page 32).
2. Remove the bottom cover (see Bottom cover on page 41).
3. Remove the battery (see Removing and reinstalling the same battery on page 44).
4. Remove the system board (see System board on page 58).
5. Remove the speakers (see Speakers on page 62).

Remove the WWAN antennas:

1. Remove the plastic cover **(1)** from the connectors on the WWAN module.
2. Disconnect the antenna cables **(2)** from the WWAN module.
3. Peel the antennas **(3)** off the computer.

4. Remove the cables **(4)** from the routing along the bottom of the computer.

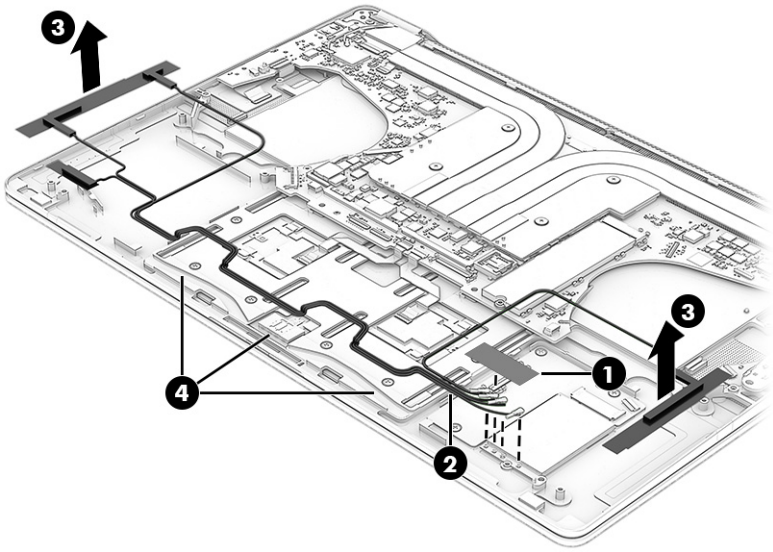

Reverse this procedure to install the WWAN antennas.

Display assembly

Use this procedure to remove the display assembly.

Table 6-12 Display assembly descriptions and part numbers

Description	Spare part number
HP DreamColor	Q29720-001
2.8 K, with camera	Q29727-001
2.8 K, no microphone, no camera	Q29728-001
2.8 K, no camera	Q29729-001
2.5 K, models, no WWAN	Q29721-001
2.5 K, models, no WWAN, with camera	Q29722-001
2.5 K, models with WWAN, with camera	Q29723-001
WUXGA, models, no WWAN	Q29724-001
WUXGA, models, no WWAN, with camera	Q29725-001
WUXGA, models with WWAN, with camera	Q29726-001

NOTE: Displays are available only as entire assemblies.

Before removing the display panel, follow these steps:

1. Prepare the computer for disassembly (see Preparation for disassembly on page 32).
2. Remove the bottom cover (see Bottom cover on page 41).

3. Disconnect the battery cable from the system board (see Removing and reinstalling the same battery on page 44).

Remove the display assembly:

1. Disconnect the left display cable **(1)** from the system board ZIF connector.
2. Remove the plastic protector **(2)** from the antenna connectors on the integrated WLAN module, and then disconnect the antenna cables **(3)** from the WLAN module.
3. Remove the antenna cables from the clip **(4)** on the system board bracket.
4. Disconnect the right display cable **(5)** from the system board ZIF connector.

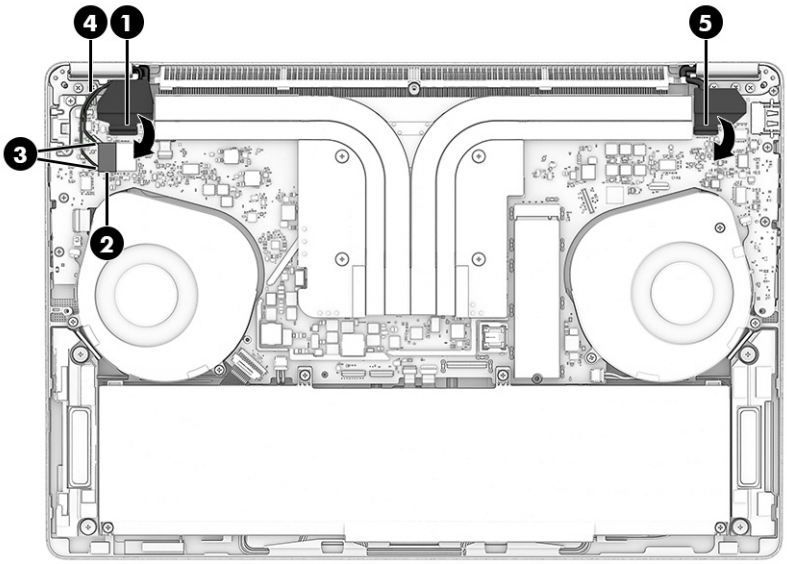

5. Remove the six Phillips M2.5 × 5.0 screws that secure the display assembly to the computer.

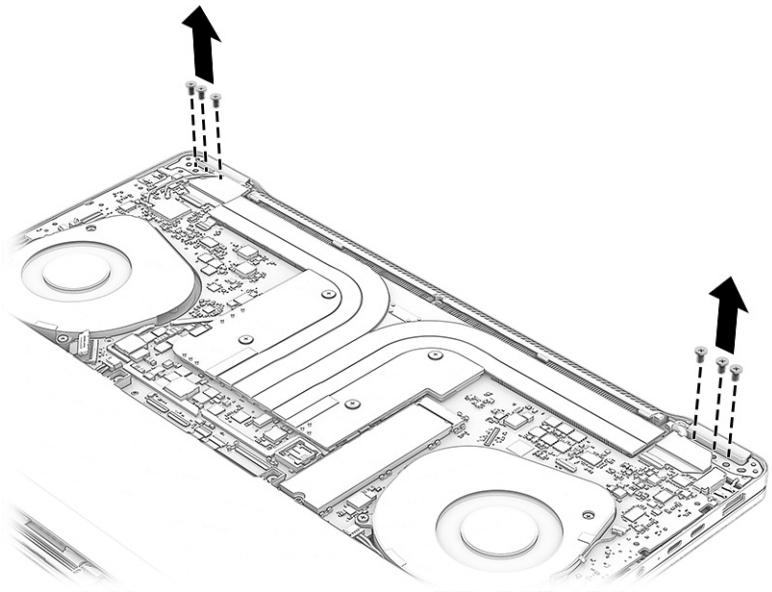

6. Open the computer **(1)**.
7. Separate the display **(2)** from the computer.

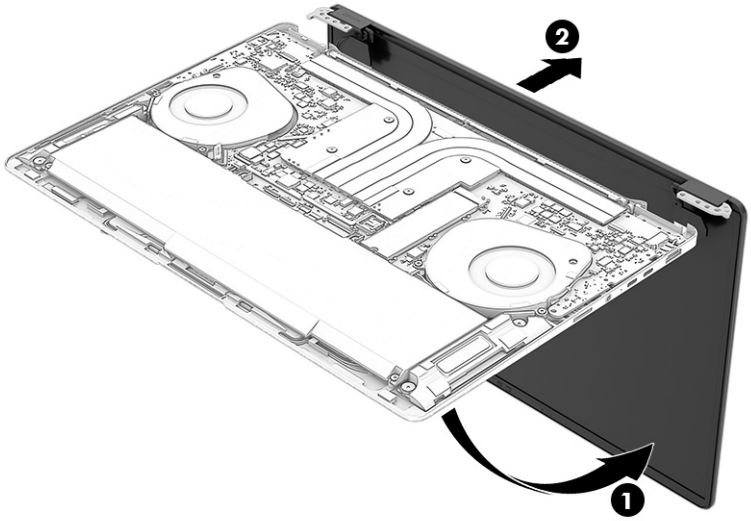

Reverse this procedure to replace the display assembly.

Top cover

The top cover remains after removing all other spare parts from the computer.

Table 6-13 Top cover descriptions and part numbers

Description	Spare part number
Models with WLAN only	Q32341-001
Models with WLAN and WWAN	Q32340-001

7 Troubleshooting guide

This chapter primarily focuses on troubleshooting HP Mobile Workstations. The information is provided so that you can solve problems yourself or at least narrow down the number of possible causes.

Based on some of the most common symptoms, this chapter identifies logical steps and available resources or tools for resolving an issue. HP recommends that you follow the instructions carefully, observe safety precautions, and note any observations or results. Capturing this information can help identify and resolve the problem more quickly.

⚠ **WARNING!** To reduce the risk of electric shock or damage to the equipment:

- Do not disable the power cord grounding plug. The grounding plug is an important safety feature.
- Plug the power cord into a grounded (earthed) outlet that is easily accessible at all times.
- Disconnect power from the equipment by unplugging the power cord from the AC outlet.
- Before disassembling notebooks, always disconnect power and remove the battery.

IMPORTANT: Static electricity can damage the electronic components of the computer. To prevent damage to the computer, carefully observe the electrostatic discharge precautions.

- Discharge static electricity by briefly touching a grounded metal object before you begin.
- Work on a static-free mat.
- Wear a static strap to ensure that any accumulated electrostatic charge is discharged from your body to the ground.
- Create a common ground for the equipment that you are working on by connecting the static-free mat, static strap, and peripheral units to that piece of equipment.
- For more information, see Electrostatic discharge information on page 25.

IMPORTANT: The computer includes customer self-repair parts and parts that should be accessed only by an authorized service provider. Accessing parts described in Removal and replacement procedures for authorized service provider parts on page 53 can damage the computer or void the computer warranty.

Resources

Use this table to locate troubleshooting resources.

Table 7-1 Troubleshooting resources and their descriptions

HP Resource Tool	Description	Link
HP Customer Support	Provides important support, such as warranty, support cases, drivers, Customer Advisories, Customer and Security Bulletins, and Product Change Notices.	https://support.hp.com/us-en/contact-hp
HP Support account	Allows you to sign up for an HP support account.	https://support.hp.com/us-en/help/hp-account
HP Support Forums	Provide discussions about HP products and issues.	http://h30434.www3.hp.com/psg/
Vendors' websites	Provide additional information for associated components such as Intel® (processor, WLAN), Microsoft (Windows), AMD®/NVIDIA® (GPU), and so on.	http://www.intel.com/content/www/us/en/homepage.html http://www.amd.com http://www.nvidia.com

General troubleshooting steps

This section helps you become familiar with troubleshooting methodology and efficiently resolve problems.

Proceed through the steps in the following table until the issue is resolved, and then move on to the next step that is relevant to the issue. For example, if you resolve a memory issue using the HP PC Diagnostics, or Unified Extensible Firmware Interface (UEFI), tool in step 6, you can then move on to step 10 to reseat the memory into its memory slot.

NOTE: You can ignore troubleshooting steps that do not apply to your issue.

Table 7-2 Troubleshooting methodology and general troubleshooting steps

Identify issue	Analyze issue	Resolve issue	Verify solution
1. Understand the issue on page 73 2. Examine the environment on page 75 3. Perform a visual inspection of hardware on page 75 4. Update BIOS and drivers on page 76	5. Remove or uninstall recently added hardware, software on page 76 6. HP Hardware Diagnostics and Tools on page 77 7. Status lights, blinking light codes, troubleshooting lights, and POST error messages on page 79	8. Hard reset on page 82 9. Soft reset (Default Settings) on page 83 10. Reseat cables and connections on page 83 11. Test with minimum configuration on page 84 12. Test with verified working configuration (hardware or operating system) on page 85 13. Replace the system board on page 85	Verify solution on page 86

Identify the issue

Use these guidelines to correctly determine the problem.

1. Understand the issue

It is important to understand the issue that occurred, including related symptoms. It helps to understand the basic computer startup sequence as well as the failure itself.

Startup sequence

The computer performs several steps after you press the power button or restart the computer.

It is important to understand where in the startup sequence the symptoms occur. The following table lists the phases of the startup sequence and explains the symptoms that might occur in each phase. For example, a blue screen error (BSOD) often occurs during the performance phase.

Table 7-3 Startup sequence and associated failures

Item	Procedure
Startup	After you press the power button, the computer starts after all internal power rails (such as 5 V, 3.3 V) are stable. Confirm that power lights are on and fan is spinning. Common issues: all lights are off; troubleshooting lights are on; computer does not start; video is absent.
POST (UEFI/BIOS)	Power-On Self-Test (POST) verifies that hardware components (such as processor, hard drive, memory) are functional. When POST is complete, the HP logo appears briefly and then disappears. If there are errors, the computer might exhibit blinking lights, POST error messages, or similar notifications. Common issues: lights blink; error message appears; system hangs (locks up or freezes)
Performance (operating system)	System boots to operating system, and Windows logo screen appears. Common issues: hangs, blue screen, distorted video, driver conflict, slow performance, display issue (dead pixel), I/O issue (no speaker sound), wireless/audio unavailable, noise. See Analyze the issue on page 76 table for detailed troubleshooting information.

Failure classification

Failure classification is a breakdown of different types of failures and symptoms that could occur during the boot-up sequence.

Table 7-4 Failure classification by startup sequence on page 74 and Table 7-5 Failure classification by hardware devices on page 75 represent the failure classifications for common notebook failures.

Table 7-4 Failure classification by startup sequence on page 74 categorizes failures by the startup sequence.

1. Power-on: Common issues are no power, recycle, or restart.
2. POST: Common issues are no boot (despite power), light flash, or diagnostics error.
3. Performance: Common issues are Intermittent Loss of Power, Blue Screen, Hang. In many cases, issues can be identified and associated with particular hardware (for example, display or storage).

Table 7-5 Failure classification by hardware devices on page 75 categorizes failures by hardware:

- Display
- I/O (input/output) devices

- Storage
- Mechanical

A single symptom can be listed under different groups. For example, No Video can belong to (1) power-on or (4) display; but flickering when turned on should be listed in (4) display. In another example, a blue screen can be caused by a driver conflict in performance (3), but it can also be caused by a defective hard drive under (6) storage. Therefore, failures that share similar symptoms are noted.

If possible, make a record of the failure symptom, the phase of the startup sequence where the failure occurs, and the most likely location in the failure tree (Table 7-4 Failure classification by startup sequence on page 74 and Table 7-5 Failure classification by hardware devices on page 75). This record helps isolate the issue and indicate the next steps. For example, when the computer is running the operating system, it can experience an issue with (4) display, (5) I/O devices (keyboard, wireless, and so on), (6) storage, or (7) mechanical components (stuck buttons, thermal shutdown, and so on).

NOTE: *Uncategorized* is used if an issue found is not listed. For example, Bluetooth is offered on certain hardware configurations; therefore, you can classify a Bluetooth issue under I/O Device if needed.

Failure classification by startup sequence

Use this table to locate failure classification information.

Table 7-4 Failure classification by startup sequence

1. Power-on	2. POST	3. Performance
1. No power on page 88	1. No video (with power) on page 95	1. Intermittent shutdown on page 98[a]
2. Intermittent power-on, shutdown, reboot on page 90[a]	2. Blinking lights on page 96	2. Blue screen on page 99[b]
3. AC adapter issue on page 91	3. Diagnostics error messages on page 97	3. Freeze at Windows Logo (hang/lockup) on page 101
4. Battery not recognized, not charging on page 92	4. BIOS password on page 97	4. Electromagnetic Interference (EMI) on page 102
5. Battery discharges too fast on page 94		5. No wake up on page 103
6. Burnt smell on page 94		6. Unresponsive on page 104
		7. Slow performance on page 105[c]
		8. HP Smart Adapter warning message on page 105
		9. Incorrect time and date on page 106

[a,b,c] similar symptoms

Failure classification by hardware devices

To determine failure by device, use this table.

Table 7-5 Failure classification by hardware devices

4. Display	5. I/O devices	6. Storage	7. Mechanical
1. Display anomalies on page 107	1. Keyboard on page 114	1. Hard drive or solid-state drive not recognized on page 123	1. Noise (sound) on page 127
2. Dead pixel on page 109	2. Keyboard point stick on page 115	2. No boot to operating system (no read/write error) on page 124	2. Fan runs constantly on page 128
3. No video (internal) on page 109[c]	3. Keyboard backlight on page 116	3. Read-write error on page 125	3. Thermal Shutdown on page 129
4. No video (external) on page 110[c]	4. Touchpad on page 116	4. Slow performance on page 125[b]	
5. DisplayPort/VGA on page 110	5. Network Connectivity Ethernet (RJ-45 jack) on page 117	5. Blue screen (BSOD) error on page 126[a]	
6. HDMI on page 110	6. Network connectivity wireless (WLAN) on page 117	6. Noisy hard drive on page 126	
7. No or bad external video via docking on page 111	7. WWAN on page 118		
8. Incorrect or missing color/distorted image on page 112	8. USB on page 118		
9. Touch screen on page 113	9. Smart card reader on page 119		
	10. Speaker, headphone - audio issues on page 120		
	11. Thunderbolt (TB) on page 122		

[a,b,c] similar symptoms

2. Examine the environment

It is important to examine the computer's environment. If you can quickly identify the cause of the issue, fewer resolution steps might be needed.

Perform the following environment inspections:

- Check all cables and connections to be sure that no connections are loose.
- Confirm that power sources are good, such as AC outlet or adapter (110 V/220 V AC), power strip. Test with a verified working AC outlet.
- Check for compatibility issues between the computer and third-party devices, peripherals, uncertified devices, incompatible hardware (for instance, macOS device). Incompatibility can result in blue screen errors, improper operation, and so on.
- Isolate the computer from sources of electromagnetic interference (EMI), such as cell phones, two-way radios, floor mats, fans (and other electronic motors). EMI might contribute to a display freeze issue or lockup.

3. Perform a visual inspection of hardware

Perform a physical inspection of the computer.

- Look for abnormalities such as a cracked display, dented battery, broken latches for battery bay, keyboard key caps popped out, dust over connectors, liquid spill over keyboard.
- Look for signs of drop, movement, or vibration that might cause internal and external loose connections.

4. Update BIOS and drivers

Whenever possible, update to the latest BIOS, firmware, and drivers before troubleshooting.

IMPORTANT: Note that some customer company policies prohibit updates. Check your company policy before taking action.

The updates might include fixes for your computer issues, and they might also enhance system performance. HP continually improves the update process to make it easier. You can update the BIOS locally through a manual process, through an automatic installation, or through a remote installation on multiple units.

Manually updating BIOS and drivers

Use this information to update the BIOS.

- To manually update the BIOS and drivers, see the Setup Utility (BIOS) chapter.
- See the specific BIOS update installation instructions that accompany the download.

Remotely deploying the BIOS and drivers

Instead of manually searching for and downloading each SoftPaq, users and IT personnel can use two tools to identify and download all appropriate SoftPaqs for the selected HP models.

- HP SoftPaq Download Manager (SDM) is a software tool that streamlines the download, extraction, and installation process of SoftPaqs, including BIOS and drivers.
- HP System Software Manager (SSM) is a software tool that simplifies the deployment of SoftPaqs to HP computers.

Analyze the issue

Use these steps to evaluate and interpret the problem.

5. Remove or uninstall recently added hardware, software

HP has designed this computer and validated it using a full-range hardware and software qualification matrix. If an issue appears to have started recently, it might be related to the recent addition of hardware or software.

A good method to determine the root cause is to remove recently added components or uninstall applications one at a time and restart the computer when necessary.

IMPORTANT: After you have completed the process of uninstalling hardware or software and are ready to reinstall, be sure that the new device is seated properly and all cables are correctly connected. After installing the device, restart the computer, and be sure that the new device is turned on. In addition, if the new device is a root cause of a problem, it could cause a conflict in drivers or incompatibility issues with other installed programs. For any new hardware you have added, be sure to install the latest drivers available from the device vendor's website.

6. HP Hardware Diagnostics and Tools

HP offers diagnostics and tools to diagnose hardware failure. This section describes how to use some of these tools. Check for the latest versions before use.

HP PC Hardware Diagnostics UEFI

HP PC Hardware Diagnostics is a Unified Extensible Firmware Interface (UEFI) that allows you to run diagnostic tests to determine whether the computer hardware is functioning properly.

The HP PC Hardware Diagnostics UEFI tool is built within BIOS (basic memory and hard drive diagnostics only), or within new hard drives themselves. These drives contain more advanced versions of the diagnostic tool than the BIOS-based version.

In addition, for HP authorized service partners and IT professionals who need to support a mixed environment of older and newer HP/Compaq PCs, the HP PC Hardware Diagnostics Tool (https://support.hp.com/us-en/help/hp-pc-hardware-diagnostics) supports a wide range of HP computers.

The tool runs outside the operating system so that it can isolate hardware failures from software issues, whether caused by the operating system or applications. In reality, you can determine many problems using this tool if the issue is a defective part or a loose connection.

The tool has three major functions:

- System Tests check the computer's hardware to verify that everything is functioning properly. If your system won't boot into Windows, try the Quick System Test. For more comprehensive testing, use the Extensive System Test option. If the System Test did not detect a hardware problem, continue with the Component Tests.
- Component Tests focus on selected hardware components in your computer.
- Firmware Management updates your computer's BIOS to the latest version (available separately) or rolls back to a previous version.

1. Turn on or restart the computer, quickly press the esc key on the computer, and then press f2.

   The BIOS searches three places for the diagnostic tools, in the following order:

   a. Connected USB drive

   b. Hard drive

   c. BIOS

2. When the diagnostic tool opens, use the keyboard arrow keys to select the type of diagnostic test you want to run, and then follow the on-screen instructions.

   Screen capture appearance might vary.

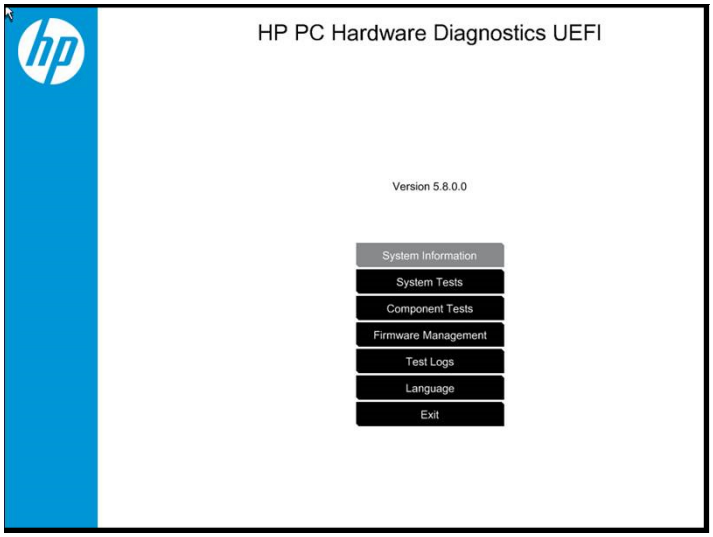

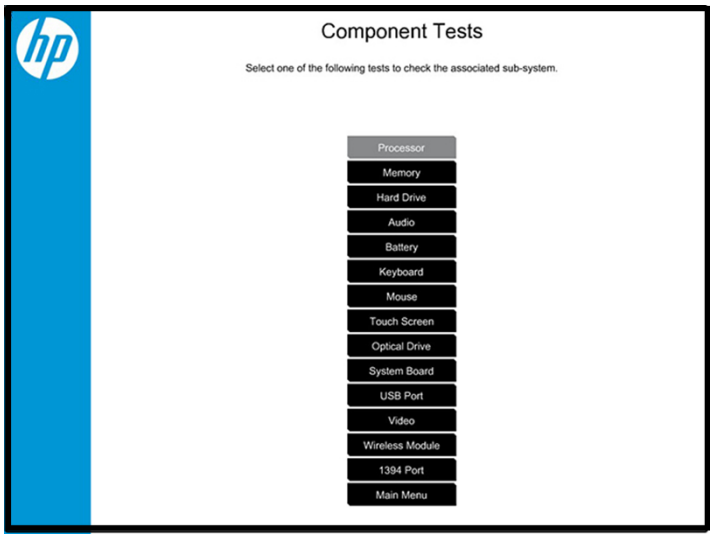

NOTE: Using this tool can be especially helpful when the computer cannot boot to Windows.

NOTE: If a component fails a test, write down the information so that it is available when you contact support. The information is also available in **Test Logs** on the Main Menu.

For more information, see Using HP PC Hardware Diagnostics on page 149.

HP BIOS Configuration Utility (BCU)

HP BCU is a free utility that captures the BIOS settings and their values. This tool provides a text file of the computer's BIOS configuration. This file can help identify any settings that are contributing to an issue.

In some cases, it might help to compare this BIOS text file to the default settings of the computer.

For more information, see http://ftp.hp.com/pub/caps-softpaq/cmit/whitepapers/BIOS_Configuration_Utility_User_Guide.pdf.

NOTE: HP recommends that you reset BIOS before trying BCU. Resetting the BIOS is always available and relatively quick to try, whereas BCU takes extra time and effort.

HP Image Diagnostic Tool

Available to HP Authorized Support Partners (ASPs) and users, this tool collects information about the current state of the computer, including product serial number, platform and BIOS information, and information about user-installed software and hardware components.

Access this tool at https://ftp.hp.com/pub/caps-softpaq/cmit/support/HP_ImageDiags.html. HP encourages you to review the report before sending it to support. The report can assist you with diagnostics and solutions to problems you encounter.

Non-HP diagnostics tools

Refer to the following diagnostic tools for troubleshooting help.

Windows-To-Go USB

Windows-To-Go USB is a Microsoft-based tool for Enterprise editions of Windows that can help in troubleshooting. You can find a process online about how to create a live Windows USB drive.

Intel Processor Diagnostic Tool

Determine what processor is in your computer and verify the processor operating frequency. The tool also tests specific processor features and performs a stress test on the processor. For more information, see http://www.intel.com/support/processors/sb/CS-031726.htm?iid=subhdr+tools_procdiagtool.

7. Status lights, blinking light codes, troubleshooting lights, and POST error messages

Carefully observe any behavior that the computer is exhibiting: status lights, blinking lights, and POST error messages during boot. It is important to understand what these indicators mean.

Status lights

The following table describes basic lights on the computer.

Table 7-6 Power button functions and lights and their descriptions

Component	Description
Power button	When the computer is off, press the button to turn on the computer. When the computer is on, press the button briefly to initiate sleep (Windows) or suspend (Linux®). When the computer is in the sleep state, press the button briefly to exit sleep (Windows) or suspend (Linux). When the computer is in hibernation, press the button briefly to exit hibernation. **IMPORTANT:** Pressing and holding down the power button results in the loss of unsaved information. If the computer stops responding and operating system shutdown procedures are ineffective, press and hold the power button.
Front power light	On: The computer is on. Blinking: The computer is in the sleep state. Off: The computer is off.

Table 7-6 Power button functions and lights and their descriptions (continued)

Component	Description
Front AC adapter and battery light	White: The computer is connected to external power, and the battery is charged from 90% to 99%. Amber: The computer is connected to external power, and the battery is charged from 0% to 90%. Blinking amber: A battery that is the only available power source has reached a low battery level. When the battery reaches a critical battery level, the battery light blinks rapidly. By default, the critical battery level is defined in Power Options as 5%. Off: The battery is fully charged.
Front hard drive light	Blinking white: The hard drive is being accessed. Amber: HP 3D DriveGuard has temporarily parked the hard drive.
Rear AC adapter light	White: The computer is connected to external power. Off: The computer is not connected to external power.

Blinking light codes

During startup, the computer might not start properly. If this occurs, blinking light codes can help identify the cause.

The computer uses the following blinking lights to identify a hardware component that reports an error during startup. For more information, see Blinking lights and boot error codes on page 130.

Table 7-7 Blinking light codes and what they mean

Blink codes	Error
Amber battery light: blinks 1 Hz continuously	Embedded controller unable to load firmware
Caps and num lock lights = 1 blink	Processor not executing code
Caps and num lock lights = 2 blinks	BIOS recovery code unable to find valid BIOS recovery image
Caps and num lock lights = 3 blinks	Memory module error
Caps and num lock lights = 4 blinks	Graphics controller error
Caps and num lock lights = 5 blinks	System board error
Caps and num lock lights = 6 blinks	Intel Trusted Execution Technology (TXT) Error
Caps and num lock lights = 7 blinks	Sure Start unable to find valid BIOS Boot Block image
Caps and num lock lights = 8 blinks	Sure Start has identified a problem (Manual Recovery Policy Set)

POST error messages

The Power-On Self-Test (POST) is a series of diagnostic tests that runs automatically when the computer is turned on. If the POST encounters a problem, visual error messages are displayed before the operating system starts.

POST checks the following items to ensure that the computer system is functioning properly:

- Memory

- Processors
- BIOS
- Mass storage devices
- Fans

The following table describes errors encountered during HP PC Hardware Diagnostics UEFI.

Table 7-8 System diagnostics failure codes and actions to address the failure

Test description	Failure description	Error code	Suggested user actions
Startup Test	Memory module	200	Attempt to reseat the memory module, and then repeat the test. For details on troubleshooting issues related to the memory module, search for support documentation at http://www.hp.com/support.
Startup Test	Hard Disk 1 SMART	301	Attempt to reseat the hard drive, and repeat the test. The hard drive might have failed.
Boot Device Manager	Boot device not found	3F0	Reset BIOS. Then reseat the hard drive, and repeat the test.
BIOS Recovery	BIOS Recovery Occurred	500	This message indicates that BIOS recovery was completed successfully. No further action is required.
BIOS Application	BIOS Application Error	501	The BIOS installation might have become corrupted. Download the latest version of the BIOS and install it. If reinstalling the BIOS fails, contact support for further assistance.
CMOS Recovery	CMOS Recovery Occurred	502	This message indicates that CMOS recovery was completed successfully. No further action is required.
Battery Check	Primary Battery Replace	601	This message indicates that the primary battery has very low capacity. Search for support documentation at http://www.hp.com/support for details on using the HP Support Assistant to verify the battery capacity and, if necessary, order a replacement.
Wireless Modules	Not installed or not responding	701	Reseat the wireless LAN adapter module and antennas. Because seating or reseating a wireless LAN adapter is unique to each computer model, see the WLAN module removal section in the removal and replacement chapter for further details. Contact support if third-party wireless adapters are installed in the computer.
Fan	Fan not operating correctly	90B	The system fan might be malfunctioning. Replace the fan.

Resolve the issue

The following sections help you fix the issue.

8. Hard reset

A hard reset (or forced reset) erases all information in the computer's memory and might restore functionality. Resetting the computer forces the system to clear and reestablish the connections between the BIOS and the hardware.

Performing a hard reset might fix the following common conditions:

- Windows stops responding.
- Computer stops before Windows loads, indicated by incomplete startup, blinking cursor on a black background, and errors relating to operating system not found or a missing drive.
- Display suddenly goes blank and stays blank.
- Software freezes.
- Keyboard stops responding.
- The computer does not exit sleep or suspend state.
- An external device stops responding. Turn off the power to that device in addition to performing the steps in this document.

Before performing a hard reset, you must disconnect or remove all peripheral devices. Start and test the computer by itself, and if the problem is not resolved, reconnect one peripheral device at a time. To resolve the startup or operational problem, run HP Support Assistant, or manually install all updated drivers from Microsoft and HP.

Before beginning, turn the computer over and look for a battery compartment door or service door. On some platforms, the battery is considered removable but not accessible.

1. Turn off the computer.
2. Remove the computer from any port replicator or docking station.
3. Disconnect all external connected peripheral devices such as USB storage devices, external displays, and printers.
4. Unplug the AC adapter from the computer.
5. Disconnect the battery.
6. Press the power button + Windows logo + V.
7. Reconnect the battery and plug the AC adapter back into the computer, but do not connect any of the peripheral devices.
8. Press the power button to turn on the computer.
9. If a startup menu appears, use the arrow keys to select **Start Windows Normally**, and then press the enter key.
10. After reconnecting each of the peripheral devices, run Windows Update and HP Support Assistant to update all device drivers.

CMOS refers to the battery-powered semiconductor chip located on computer's system board. Notebooks store low-level settings like the system time and hardware settings in CMOS. Sometimes you must clear CMOS, which requires disconnecting the AC adapter and battery.

NOTE: Clearing the CMOS should only be performed for troubleshooting purposes. There is no reason to clear CMOS if the computer is working properly.

9. Soft reset (Default Settings)

If your computer has issues starting up, has errors during startup, has issues after you add hardware, or has other abnormal system behaviors that you cannot resolve through any other methods (for example, hard reset), it might be necessary to reset the system BIOS to default settings.

NOTE: Some company policies prohibit updates or changes. Check whether the computer has custom BIOS settings before taking action.

To load BIOS to default settings: Restart the computer, and then press **f10 > Main > Restore defaults**. For more information, see http://support.hp.com, and then search for **BIOS Setup Utility Information and Menu Options**.

10. Reseat cables and connections

Many problems are caused by improper connections or loose connections because of abnormal movement and vibration.

NOTE: Before disassembling the computer to reseat cables and connections, always disconnect power and remove the battery, or disconnect a nonremovable battery.

See Cable management on page 141 and Connector types on page 142 for suggested cable management practices when you remove and install components.

You can access and reseat connections for Customer Self-Repair (CSR) parts. Examples of reseating hardware include:

- Reseating the battery into the battery bay can resolve no-battery-found and no-charging issues.
- Reseating memory modules can resolve memory error, startup, and blue screen issues.
- Reseating the hard drive can resolve a POST error 3F0 (no boot device) issue (see POST error messages and user actions on page 133).
- Reseating the keyboard cable can resolve an unrecognized keys error.
- Reseating the wireless module and antenna cable can resolve a wireless connection issue.

For field replaceable units (FRUs), authorized service providers can try the following steps. For more information, see Removal and replacement procedures for authorized service provider parts on page 53.

- Reseating the fan cable can fix POST error 90B (no fan detected) issue (see POST error messages and user actions on page 133).
- Reseating the power cable can fix a startup issue.
- Reseating the daughterboards can resolve their functional issues. Some models might have other items such as a power button board or VGA board.
- Reseating graphics cables and panel connectors can fix distorted or flickering video.

- Replacing thermal pads might resolve thermal power-down issue.

11. Test with minimum configuration

The factory-shipped computer (hardware configuration and preinstalled operating system image) is well tested and ready for use. Therefore, using the original factory hardware configuration or booting to operating system safe mode often resolves issues quickly.

- Disconnect any external USB storage, remove any discs in optical drives, remove the computer from a docking station, remove external video, and others.
- In addition to removing recently added components, you can narrow the issue down further with a minimum configuration. For example, if HP PC Diagnostics reports a memory error, test one memory module at a time to isolate the defective module.
- If the computer does not successfully boot the operating system, booting to safe mode might help identify the following possible causes of the issue.

Essential hardware configuration

If none of the previous steps resolve the issue, start the computer with essential hardware only. The purpose is to remove as much as hardware as possible while still maintaining the computer's ability to turn on.

NOTE: This step is to be used by authorized service providers only. HP will not honor the warranty for a system tested with the system board removed without the heat sink or fan.

This essential configuration is often used to troubleshoot power-on related issues, such as no-boot, reboot, and freezing issues.

The essential hardware consists of the following components:

- System board
- AC adapter (unplug nonremovable battery or remove battery)
- Processor and heat sink or fan

  The processor might be integrated into the system board.
- Memory (one verified working memory DIMM)
- Graphics card, if no VGA port is available on the system board

  Platform might have both Intel integrated graphics and discrete graphics. Therefore, you might not need a discrete graphics card.
- External VGA monitor
- External USB keyboard
- External mouse

NOTE: After you remove the service door, disconnect all connections (internal keyboard, display, discrete GPU, hard drive or SSD, daughterboards, and so on) to achieve the essential hardware configuration. **Do not** disassemble the system board from its enclosure at this time.

Reverse the previous procedure by reinstalling each piece of hardware removed, one piece at a time, and testing your computer after each installation. Because your computer works with only the

essential hardware installed, those parts must be working properly. This means that one of the hardware components removed is causing the computer to fail. By installing each device back into the computer and testing after each installation, you eventually identify the failing hardware.

Safe mode

A driver conflict often results in a blue screen error message. Starting in safe mode can resolve many issues in Windows because safe mode forces the computer to load a limited version of Windows which contains only essential files.

Safe mode is useful for troubleshooting problems with programs and drivers that might not start correctly or that might prevent Windows from starting correctly. If a problem does not reappear when you start in safe mode, eliminate the default settings and basic device drivers as possible causes.

12. Test with verified working configuration (hardware or operating system)

One troubleshooting technique that can quickly isolate an issue is using a verified working part while testing. A good example is to use an external keyboard, mouse, or VGA monitor when you have issues with an internal keyboard, touchpad, or display.

Testing with a verified working AC adapter can identify an error caused by a faulty one. Similarly, testing with a verified working operating system can determine bad behaviors of the current operating system.

NOTE: In some situations, more than one item might contribute to a problem.

13. Replace the system board

Only authorized service providers may replace the system board. This should not be considered an initial step taken to resolve an issue.

Review and perform all steps discussed previously before replacing the system board. 4. Update BIOS and drivers on page 76, 7. Status lights, blinking light codes, troubleshooting lights, and POST error messages on page 79, 8. Hard reset on page 82, and 9. Soft reset (Default Settings) on page 83, or 10. Reseat cables and connections on page 83 can resolve many system board issues without requiring the effort of replacing unnecessary hardware.

IMPORTANT: System board failure is not common. Do not replace the system board until you have tried all other troubleshooting options.

NOTE: Determine whether a previous service case might be related to the current problem. For example, a fan detection issue could be caused by a loose connection resulting from previous service.

NOTE: Most of the time, effective troubleshooting can prevent a system board replacement.

Situations that can prevent resolution of the issue:

- The information provided about the issue omits key details, including any actions taken before the issue occurred.
- BIOS, software, and drivers have not been updated.
- Cables or connections are loose.
- Technician is unaware of information available from the HP Support website (CA - Customer Advisory).
- The issue is related to existing or known issues that might be identified in existing support articles.

- Technician might have omitted steps in the provided repair instructions (for example, Spare Part Replacement Instructions).
- Skipping one of the steps from the Troubleshooting Methodology table results in No Defect Found (NDF)/No Fault Found (NFF)/No Issue Detected (NID) messages.

Verify solution

Confirm that the implemented solution works.

- Reboot the system or device, and try to complete the task that produced the issue.
- If a part has been replaced, verify other basic functions. For example, GPU replacement requires keyboard removal. Therefore, it is good practice to verify all basic components to be sure that the solution is complete.
- Explain to the customer why the issue occurred and what was done to resolve it. If the solution you used was in an HP public document, provide the document information to the customer, letting them know they can locate it on http://www.hp.com. Also, tell them that there are other solutions available on the website. Advise the customer to check the website first when they have an issue. It might save them time calling in.
- Document the correct issue. Update the case with as many details as possible for other agents and engineers to analyze and study for lessons learned.

Helpful Hints

After you become familiar with the troubleshooting steps, use the helpful hints before running diagnostics and troubleshooting.

At startup

These steps provide simple, useful checks that you can perform when troubleshooting.

TIP: If you have installed an operating system other than the factory-installed operating system, go to http://www.hp.com/go/quickspecs and verify that it is supported on your system.

1. Be sure that the computer is plugged into a working AC outlet.
2. Be sure that power is connected to the docking station if you use a dock.
3. Be sure that the AC adapter light is on.
4. Be sure that the AC adapter is connected when you update BIOS to avoid BIOS corruption.
5. Be sure that the computer is turned on, the rear power light is solid white (connected to an external power source), and the front power light is solid white (normal operation).
6. Remove all optical and flash drives from your system before turning it on.
7. Be sure that the boot option is set to a working operating system drive.
8. Be sure that externally connected monitors are turned on and their power lights are on. Not all monitors are equipped with lights to indicate their functionality.
9. Turn up the brightness and contrast controls of a display or external display device if the screen is dim.

During operation

The following steps provide simple, useful checks that you can perform when troubleshooting.

1. To wake the computer:
   a. Press the power button or any key on the keyboard.
   b. If the system remains in the sleep (Windows), suspend (Linux), or hibernate state, shut down the system by pressing and holding the power button for at least four seconds.
   c. If the system does not shut down, unplug the power cord, wait a few seconds, and then plug it in again. Press the power button again to restart the system.
2. Look for blinking lights on the computer. The blinking lights could be error codes that help diagnose the problem.
3. Check all cables for loose or incorrect connections, such as external devices, power cords, or docking stations.
4. After installing a non-Plug and Play expansion board or other option, reconfigure the computer. For example, if you upgrade to an SSD, you might have to reconfigure the boot order.
5. Be sure that all required device drivers have been installed. For example, if you have connected a printer, you must install a printer driver.
6. If there is a network connection issue, plug another computer with a different cable into the network connection. There might be a problem with the network plug or cable.
7. If hardware has recently been installed, remove it and determine whether the computer functions properly.
8. If software has recently been installed, uninstall it and determine whether the computer functions properly.
9. If the screen is blank, confirm the display choice by pressing Windows logo + p and set to screen only. You can also plug an external monitor into a different video port on the computer, if one is available, and close the computer lid.
10. Verify that the latest version of BIOS, drivers, and software are installed. A new release might support new features or fix the problem.
11. Press the caps lock or num lock key. If the caps lock or num lock light toggles on or off, the keyboard is likely operating correctly.
12. Press the touchpad On/Off button light. If the light toggles on or off, the touchpad is likely operating correctly.

Consulting with HP Service

If further HP support is required, the following information might be requested when you call. It might be helpful to take notes.

- Technical support registration number (if applicable)
- Product serial number
- Product model name and number

- Product identification number
- Applicable error messages
- Add-on boards or hardware
- Third-party hardware or software
- Operating system type and revision level
- Description of symptom or failure

Common issues and possible solutions

This section contains common issues, symptoms, and a series of tables that describe possible solutions to issues from Failure Classification tables. The following sections identify the issue with symptoms and solutions to resolve an issue.

Power-on issues

Use the following sections to troubleshoot power issues.

No power

When a unit experiences no power, there are several contributing factors to consider. Be sure to consider all symptoms related to this behavior when troubleshooting.

Table 7-9 Issues, possible causes, and fixes

Items	Procedures
Symptoms • Computer does not start • Display is black or blank • No fan noise • No hard drive spinning • Lights do not glow	*Possible causes* Failed power input to the computer (external power source, AC adapter, faulty battery). Bad connection to the computer (bad power button, power connector). Defective parts (memory, hard drive, graphics) or failed system board.
	Troubleshooting steps **Perform quick check** Remove all external devices, including docking station. Verify external power source (2. Examine the environment on page 75). Perform a hard reset (8. Hard reset on page 82).

Table 7-9 Issues, possible causes, and fixes (continued)

Items	Procedures
	Verify AC adapter • Verify AC adapter is compatible with product. Verify that the part number is for this computer if possible. • Verify AC adapter and power cord are good (no physical damage, bent middle ID pin). • Verify AC adapter works on a verified working computer. • Plug in AC adapter and power on computer without battery. • Inspect power port on computer side for any damage, dust, or debris. • Check power light (7. Status lights, blinking light codes, troubleshooting lights, and POST error messages on page 79). Rear power light indicates external power to the computer is good.
	Verify battery condition and status 1. Check battery condition (overall result, cycle life, voltage) using HP PC Hardware Diagnostics UEFI tool. 2. Verify that battery is installed properly in battery bay without a gap and that latch locks are tight (for models with removable batteries). 3. Check battery status light (7. Status lights, blinking light codes, troubleshooting lights, and POST error messages on page 79). Be sure that battery is not fully discharged, preventing system from booting. 4. Determine whether the computer can turn on with battery only. 5. Remove service door and test with a verified working battery. If the computer boots, inspect original battery before replacement. 6. Test battery with a verified working computer to verify that it works. 7. If the computer still does not boot, remove battery and boot on AC power only.
	The following steps are for authorized providers or technicians.
	Verify AC adapter voltage 1. Measure DC voltage output, which should be approximately 19.5 V DC. Acceptable voltage range is from 18.5 to 20.5 V DC. 2. If the DC voltage is out of range, replace the AC adapter. **NOTE:** This action requires a digital voltmeter.
NOTE: Select models include a power cable between the system board and chassis power connector. 	**Verify power button, power connector** 1. Be sure that power button is not stuck. 2. Reseat power connector cable (if applicable). 3. Replace with new power connector cable (if the cable exists and is defective) 4. To isolate faulty power connector cable and power button, technicians can short power-on pads or pins to turn on the computer. Contact HP Engineering for this information.

Table 7-9 Issues, possible causes, and fixes (continued)

Items	Procedures
	Verify blinking lights (7. Status lights, blinking light codes, troubleshooting lights, and POST error messages on page 79) At this point, there should be sufficient power from the AC adapter to the system board. Expect to hear the fan spinning and see blinking lights or error messages (for example, faulty memory, HDD).
	Verify system board 1. Test essential hardware configuration (11. Test with minimum configuration on page 84, 12. Test with verified working configuration (hardware or operating system) on page 85, 13. Replace the system board on page 85) by removing nonessential parts. 2. If the computer still does not boot, replace system board.

Intermittent power-on, shutdown, restart

Use this information to troubleshoot power-on, shutdown, and restart issues.

Table 7-10 Issues, possible causes, and fixes

Items	Procedures
Symptoms • Does not always turn on • Intermittently hangs • Intermittently shuts down • Spontaneously restarts	*Possible causes* Electrical short, fluctuating power source, unstable power rails, loose connections, bent pins, stray wires, dust, obvious damage, nearly faulty parts (bulging or leaking capacitor). Potentially turn into a no-power issue (No power on page 88).
	Troubleshooting steps 1. Visually check power ports on both AC adapter and computer sides. 2. Inspect power sources: a. Verify that the AC adapter is working correctly. Use a confirmed working adapter to test. b. Verify that battery is not depleted while system is in the sleep state. Test with a confirmed working battery.
	The following steps are for authorized providers or technicians.

Table 7-10 Issues, possible causes, and fixes (continued)

Items	Procedures
	1. Follow actions in No power on page 88. a. Be sure that AC adapter has correct DC voltage. b. Verify battery: test with a confirmed working battery. c. Verify that power button is not stuck. d. Verify that power connector is not loose. e. Remedy loose connections and reseat major components (processor, memory, GPU, hard drive, SSD, and others). 2. Perform visual check for loose connections, bent pins, stray wires, dust, nearly faulty parts (bulging or leaking capacitor). 3. Test **essential hardware configuration** (11. Test with minimum configuration on page 84) a. If system starts, reinstall nonessential hardware one component at a time to isolate issue. b. If system does not start, replace essential hardware with verified working parts, one component at a time. If system still does not start, replace system board.

AC adapter issue

Use this information to troubleshoot AC adapter issues.

Table 7-11 Issues, possible causes, and fixes

	Solution
Symptoms • No sign of power • No boot • No rear power light • No front power light • Battery does not charge when AC adapter is connected	*Possible causes* AC adapter and others (for example, external power source). *Troubleshooting steps* **Quick check** 1. Verify external power source (2. Examine the environment on page 75). 2. Remove all external devices, including docking station. 3. Perform a hard reset for the computer (8. Hard reset on page 82). 4. Disconnect and reassemble the power cord and adapter in case the adapter experienced short circuit, over-current, over-temperature events. 5. Use a verified working adapter. If the computer operates normally, there is a problem with the original adapter. 6. Verify that the AC adapter works on a verified working computer. If the computer operates normally, there is no problem with the adapter. See HP Smart Adapter warning message on page 105 for further information.

Table 7-11 Issues, possible causes, and fixes (continued)

	Solution
	Verify AC adapter 1. Remove working battery. 2. Verify that AC adapter is compatible with product. Verify that part number is for this computer if possible. 3. Inspect AC adapter and power cord for physical damage, bent middle ID pin. 4. Plug in AC adapter and power the computer without battery. 5. Inspect the power port on computer side for any damage, dust, debris. 6. Check power light (7. Status lights, blinking light codes, troubleshooting lights, and POST error messages on page 79). Rear power light indicates that external power to the computer is good. 7. If there is still no rear power light or no startup, replace the AC adapter.
Tips	The HP Smart AC adapter has a special pin in the middle, called the ID pin, for power rating and throttling. If this pin is broken, the rear power light turns on, but the power button and front power lights blink continuously, and the computer does not turn on. Third-party AC adapters do not work with the computer. Use the AC adapter that came with the computer for better performance.

Battery not recognized, not charging

Use this information to troubleshoot battery issues.

Table 7-12 Issues, possible causes, and fixes

Items	Procedures
Symptoms	*Possible causes*
• No battery status light	Defective AC adapter, battery, or both.
• Blinking amber (critically low battery level)	**NOTE:** Before proceeding, verify that the computer can start to BIOS or Windows with a good AC adapter.
• No startup without AC adapter	

Table 7-12 Issues, possible causes, and fixes (continued)

Items	Procedures
	Troubleshooting steps **Visual inspections** 1. Inspect battery connectors for any signs of damage. 2. Verify that battery is installed properly in battery bay without gap or obstructions and latch locks are tight. Reseat battery (for models with removable batteries). 3. Determine whether battery gets hot (batteries heat up when charging, but not too hot to touch). **Check battery warranty** to see whether the battery is new or its warranty is expired. Battery capacity degrades over time. **Verify front battery status light** 1. Battery status light is off: battery not recognized. 2. Battery status light is blinking amber: critically low battery level. **Reset** 1. Hard reset (8. Hard reset on page 82) 2. Soft reset (9. Soft reset (Default Settings) on page 83) **Verify AC adapter** 1. Determine whether the computer needs the AC adapter to boot and operate. Sometimes, an intermittently bad AC adapter and loose connection between adapter and computer results in inability to charge battery, which causes short run time. 2. Inspect AC adapter to verify that it is functioning. 3. Test with a working AC adapter and confirm whether battery is charging. 4. Be sure that battery is fully charged (AC adapter plugged in at least 2.5 hours). **Diagnostics:** HP tools report results such as passed, calibrate, weak, replace, no battery, and unknown, and they suggest corresponding actions. HP PC Hardware Diagnostics UEFI is a good tool to use to isolate and determine faulty battery, especially for quickly discharging (short life) battery. 1. Verify that battery is recognized and charging. 2. Verify battery condition if battery cycle life is past its life expectancy (that is, past 1000-cycle life and 3-year warranty). Battery might need to be replaced. 3. If issue remains, test with a verified working battery and verify battery status lights and battery conditions. 4. If issue remains, replace system board. 5. Verify the new replacement.
Tips	See the computer user guide for instructions regarding battery maintenance and increasing battery life.

Battery discharges too fast

Use this information to troubleshoot battery issues.

Table 7-13 Issues, possible causes, and fixes

Items	Procedures
Symptoms Battery has good status light but discharges too fast	*Possible causes* AC adapter, battery, or both.
	Troubleshooting steps **Verify AC adapter** Determine whether the computer needs the AC adapter to boot and operate. Sometimes an intermittently bad AC adapter and loose connection between adapter and computer results in the inability to charge the battery and causes short runtime. 1. Inspect AC adapter to verify that it is working. 2. Test with AC adapter alone and with a verified working AC adapter.
	Verify battery: Because battery capacity can degrade over time, check the warranty coverage. Run a battery test to confirm whether issue is hardware related. 1. Review battery power plans in **Control Panel > Power Options** that might consume more energy and discharge battery faster. Resetting default to **Power Saver** option can conserve battery power. 2. Determine whether any graphics are processing. 3. Verify battery maintenance and operations. Leaving the battery at a high level of charge in a high-temperature environment for extended periods accelerates the loss of capacity. 4. Test and calibrate battery using HP PC Hardware Diagnostics UEFI. 5. Verify battery life cycle using HP Support Assistant tool. If battery cycle life is past its life expectancy (past the 1000-cycle life and 3-year warranty), the battery might need to be replaced. 6. Compare discharge time with a verified working battery (remove AC adapter) using **Hardware Diagnostics UEFI>Hard Drive Tests>Extensive Test>Loop until error**.
Tips	To conserve battery power, turn off Wireless On-Off button and other peripherals and USB devices, applications, processes (in Task Manager) when not in use; also, reduce screen brightness. Follow HP instructions about how to maintain battery and increase battery life.

Burnt smell

Use this information to troubleshoot burnt-odor issues.

Table 7-14 Issues, possible causes, and fixes

Items	Procedures
Symptoms	*Possible causes*
Emits smoke, burnt smell	Defective on-board components.
	Troubleshooting steps
	General visual inspection
	1. Disconnect the computer from power source (AC adapter and battery).
	2. Inspect for visual damage on AC adapter and battery. Test on a known working computer to isolate issue. If issue follows AC adapter or battery, replace it.
	3. Inspect for any sign of liquid spill on the computer (back of keyboard).
The following steps are for authorized providers or technicians.	
	Further inspection on components
	1. Inspect further sources internally after disassembling chassis, such as burnt or damaged components.
	2. If the issue persists, replace boards, AC adapter, and battery for safety concern, and report issues to HP.

POST

Use the following sections to troubleshoot POST issues.

No video (with power)

Use this information to troubleshoot video issues.

Table 7-15 Issues, possible causes, and fixes

Items	Procedures
Symptoms	*Possible causes*
• No video (black or blank image) but have power • Light activity • No error messages • Fan noise • Hard drive light blinking and hard drive noise	Failed display Failed critical components (memory, hard drive, system board) Loose connection Recently added hardware **NOTE:** These suggestions assume that the computer has not previously been set up for multiple displays.

Table 7-15 Issues, possible causes, and fixes (continued)

Items	Procedures
	Troubleshooting steps **Quick check** 1. Verify that system light activity is OK. 2. Remove all external devices, including docking station. Recently added hardware or applications might cause graphics driver conflict and result in loss of video. 3. Perform hardware reset (8. Hard reset on page 82) and verify that HP Logo is presented correctly on display screen when pressing f10. 4. Test with external monitor via VGA port (or DisplayPort, HDMI, or other). Press power button and close the computer lid to force video output to external video. If unsuccessful, contact HP service. 5. If external video is OK, update BIOS, software, and drivers (4. Update BIOS and drivers on page 76), and perform soft reset (9. Soft reset (Default Settings) on page 83) if needed. Go to next step to verify display.
	Verify display • When booting to Windows, determine whether image appears on display screen (via Windows Screen Solutions or Windows logo + p for display switcher). • If there is video on the display, disconnect external display device, open the computer lid, and restart.
	The following steps are for authorized providers or technicians.
	1. Reseat display cable connection on system board. 2. Reseat display cable connection on display panel side. 3. Examine and reseat major components, such as hard drive and memory. 4. Test with minimum configuration (11. Test with minimum configuration on page 84) by removing hard drive to isolate operating system issues and testing video in F10 Setup. 5. If video is present, restart and retest the computer. 6. If video is present but bad, go to Display on page 107 section. 7. If issue persists (no video), test with external video. 8. If issue persists, test or replace with a confirmed working display. 9. If issue persists, replace discrete graphics card. 10. If issue persists, replace system board because of defective video function.
Tips	Swipe a metal piece (screwdriver) over wireless or mute buttons to act as if closing lid to force video output to external display device.

Blinking lights

Use this information to interpret blinking lights on the computer.

Table 7-16 Issues, possible causes, and fixes

Items	Procedures
Symptoms	*Possible causes*
Lights blink on keyboard caps lock/num lock keys	Blinking lights on startup usually indicate a problem with basic functionality of a critical component (processor, BIOS, graphics cards, memory, and so on) because of a loose connection, defective parts, or recently added parts.
	Troubleshooting steps 1. Check for any blink patterns. Count the number of blinks in a sequence, followed by a pause for a few seconds. 2. See status, blinking lights, and error message (7. Status lights, blinking light codes, troubleshooting lights, and POST error messages on page 79) for corrective actions. 3. If internal hardware components (such as memory, hard drive) have been recently added, a component might not be connected properly. Remove and reseat new components (10. Reseat cables and connections on page 83) one at a time.
Note	Because the display might not be functional, lights are used to indicate an error.

Diagnostic error messages

Use the information in the table to help you understand diagnostic error messages.

Table 7-17 Issues, possible causes, and fixes

Items	Procedures
Symptoms • Computer has power • POST error message displays (Windows logo has not yet appeared)	*Possible causes* Diagnostic error messages indicate a problem. There might be a problem with the instruction being sent from the BIOS to a hardware component (for example, keyboard failures), or incompatible hardware. Can usually be resolved by installing updated firmware for the component.
	Troubleshooting steps 1. See 7. Status lights, blinking light codes, troubleshooting lights, and POST error messages on page 79 for corrective actions. An example of a POST error message might be "Boot Device Not Found." 2. If there is power, you might be able to access BIOS. Reset BIOS to its default condition. (9. Soft reset (Default Settings) on page 83) 3. Restore hardware to its original condition (for example, bootable SSD instead of hard drive). 4. Reseat suspected components and verify connection. 5. Test suspected components using HP PC Hardware Diagnostics (UEFI) tool.
Note	An Error Message means that the system has finished BIOS hardware validation and is ready to launch the **Startup Menu**. To access the **Startup Menu** for further options, press the esc key while restarting the computer.

BIOS password

Use the information in the table to troubleshoot BIOS password issues.

Table 7-18 Issues, possible causes, and fixes

Items	Procedures
Symptoms	*Possible causes*
Some sections are unavailable (grayed out)	You must use an administrator password.
	Troubleshooting steps
	1. Review F10 BIOS Setup Overview to determine which features must be enabled.
	2. Your BIOS settings might be managed by a BIOS administrator password setup.
	3. If you lost or forgot the user password, contact your IT personnel.
Reference	**HP F10 Setup Overview**
	See the HP PC BIOS F10 Setup Guide at http://support.hp.com.

Performance (OS)

Most software problems occur as a result of certain situations.

- The application was not installed or configured correctly.
- There is insufficient memory available to run the application.
- There is a conflict between applications.

Be sure that all the necessary device drivers are installed.

If an operating system other than the factory operating system is installed, check whether the operating system is supported and the application is certified for the version of the operating system.

Intermittent shutdown

Use this information to troubleshoot shutdown issues.

Table 7-19 Issues, possible causes, and fixes

Items	Procedures
Symptoms	*Possible causes*
• Shutdown during startup	It is often difficult to troubleshoot an intermittent issue. Possible causes include:
• Shutdown during operation	Power-related issue: defective or insufficient power sources, poor connection.
	OS Custom Setting: Energy Saver (Power Management).
	Thermal-related issue: thermal sensors reach limits.
	Hardware related issue, voltage, out-of-range current, electrical short.
	Troubleshooting steps
	1. Update BIOS and drivers. (4. Update BIOS and drivers on page 76)
	2. Perform hard reset (8. Hard reset on page 82)
	3. Perform soft reset (9. Soft reset (Default Settings) on page 83)

Table 7-19 Issues, possible causes, and fixes (continued)

Items	Procedures
	Power-related issue 1. Verify functionality of AC adapter alone. If it does not work, test with a verified working adapter. 2. Verify battery alone. Verify that battery is not depleted. Test battery using HP PC Hardware Diagnostics (UEFI) tool. 3. Verify connection of power button and cable.
	OS custom settings 1. Advise users to reset power options and close all applications that are not in use, including applications in the background. 2. Test with a confirmed working operating system to isolate custom settings by users or any conflicting applications that cause shutdown.
	The following steps are for authorized providers or technicians.
	Thermal-related issue 1. Verify thermal condition: a. Test fan using HP PC Hardware Diagnostics (UEFI) tool. b. Check fan and connection. Reseat fan cable. c. Be sure that no obstructions or dust are in heat sink fan, fin, or vent. d. Test with a verified working fan. e. Remove old thermal compound and pads and replace with new compound and pads. 2. Verify thermal solution: Use Thermal Monitor tool (available only to authorized service providers/ technicians) to perform stress test (processor and GPU), and verify that thermal sensors are within limits after thermal condition is serviced.
	Hardware-related issue 1. Check for any signs of loose connections, bent pins, stray wires, dust, nearly faulty parts (bulging/leaking capacitor). 2. Verify that lights are solid. 3. If shutdown is reproducible, test essential hardware configuration: a. If no issue with hardware configuration, reinstall one nonessential component at a time to determine faulty hardware. b. If issue persists, replace essential hardware with a confirmed working part, one at a time. If the computer does not boot, replace system board.
Tips	Intermittent issues are difficult to reproduce and troubleshoot. It is important to record details about shutdown frequencies, system configuration (3D video application), and operating conditions.

Blue screen

Use this information to troubleshoot blue screen issues.

Table 7-20 Issues, possible causes, and fixes

Items	Procedures
Symptoms • Has power, light activity, fan spinning • HP Logo displays briefly • Fails to boot into Windows operating system, displays blue screen, and then crashes, restarts, or stops responding	*Possible causes* Recent changes: conflicting instructions from multiple programs or recently added hardware. Incompatible hardware and driver. Poor connection (hard drive, memory). Hardware malfunctioning due to overheating (GPU, processor). Defective hardware (memory, hard drive).
Important Notes & Resources	*Troubleshooting steps* There are many different ways to troubleshoot a blue screen error. Therefore, you need to identify working configuration and specific symptoms of the failure to narrow down the issue. See Blue screen (BSOD) error on page 126.
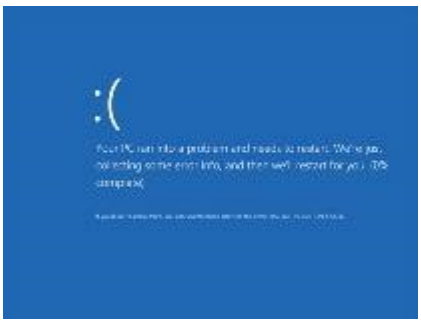	**Recommended resources** Microsoft knowledge base: http://windows.microsoft.com/en-us/windows-8/resolve-windows-blue-screen-errors For more information, search for HP Troubleshooting Error Messages on a blue screen at http://www.hp.com.

Overview of general troubleshooting steps for a blue screen error

1. Note the blue screen error message and what activity was performed at the time.
2. Perform a hard reset (8. Hard reset on page 82) after disconnecting all external peripherals.
3. Reset BIOS to default (9. Soft reset (Default Settings) on page 83) to prevent booting to another device.
4. Run HP Hardware Diagnostics to isolate major faulty hardware issues.
   - HP PC Hardware Diagnostics (UEFI) tool to test hard drive, memory, and system.
   - Thermal Monitor (available only to authorized service providers and technicians) tool to monitor temperature limits of processor and GPU.
5. Remove or undo recently added hardware (5. Remove or uninstall recently added hardware, software on page 76). For example, incompatible memory or new SSD storage.
6. Reseat cables and connections (10. Reseat cables and connections on page 83). Pay attention to proper installation of memory and hard drive.
7. Verify that a minimum of at least 100 MB of free space is available on your Windows partition.
8. If you can start Windows:

a. Update BIOS and drivers (4. Update BIOS and drivers on page 76) to support updates for incompatibilities.

b. Get all the latest updates, using Windows Update.

c. Undo recent changes:

- Startup using Last Known Good Configuration.
- Use System Restore.
- Roll back device driver in Device Manager.

d. Check for specific Error Message. See Common blue screen error messages on page 135.

e. Start in safe mode (11. Test with minimum configuration on page 84) to troubleshoot issues.

9. If you cannot start Windows:

a. Start in safe mode. (11. Test with minimum configuration on page 84)

b. Use Startup Repair to fix Windows startup files.

c. Undo recent changes using System Restore to revert to a previous working state.

d. Check for specific STOP error by analyzing Crash Dump (retrieved via a bootable USB). See Use Windows Debugging Tool on page 136.

e. Restore computer using System Recovery or image backup to factory settings.

10. Test with essential hardware configuration (11. Test with minimum configuration on page 84) with a verified working operating system (for instance, USB Windows-To-Go), if available, to isolate the software issue.

Freeze at Windows logo (hang or lockup)

Use the following information to troubleshoot hang or lockup issues.

Table 7-21 Issues, possible causes, and fixes

Items	Procedures
Symptoms • Has power, light activity, fan spinning • HP logo displays briefly • Attempt to start to operating system and freeze/hang at Windows logo • No response to pressing num lock or caps lock key 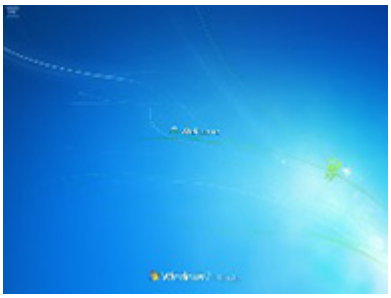	*Possible causes* Conflicting instructions from multiple programs or drivers; installing a new hardware or program that is not compatible (might also cause a blue screen error—see blue screen issue).
	Troubleshooting steps Perform the following steps to verify normal boot process: 1. Disconnect all external peripherals, and perform a hard reset (8. Hard reset on page 82). 2. Perform a soft reset (9. Soft reset (Default Settings) on page 83). 3. Update BIOS and drivers (4. Update BIOS and drivers on page 76). a. Rollback to previous version might be necessary. b. Go to safe mode to install drivers. 4. Run Hardware Diagnostics to isolate hardware issue. 5. Undo recent changes in Windows (5. Remove or uninstall recently added hardware, software on page 76). 6. Reseat cables and connections (10. Reseat cables and connections on page 83). 7. Start Windows in safe mode (11. Test with minimum configuration on page 84). 8. Use Startup Repair Windows to fix damaged files in Windows. 9. Test with essential hardware configuration (11. Test with minimum configuration on page 84) with a verified working operating system (for instance, USB Windows-To-Go), if available, to isolate the software issue.

Electromagnetic Interference (EMI)

Use this information to troubleshoot EMI issues.

Table 7-22 Issues, possible causes, and fixes

Items	Procedures
Symptoms	*Possible causes*
System locks up, freezes in certain physical area or location	Electromagnetic interference (EMI).
	Troubleshooting steps
	1. See (2. Examine the environment on page 75). Pay attention to external power source, high-frequency signals such as cell phones, microwave ovens. 2. Move the computer to different locations nearby to determine where it fails and where it does not fail. 3. Test with a verified working computer in original factory configuration. 4. Consult with support.

No wake up

Use this information to troubleshoot wake-up issues.

Table 7-23 Issues, possible causes, and fixes

Items	Procedures
Symptoms	*Possible causes*
When resuming from a power management state the computer might display: • Blank screen • Some light activity	Power-saving mode; multiple-display setting.

Table 7-23 Issues, possible causes, and fixes (continued)

Items	Procedures
	Troubleshooting steps 1. Verify that front power light (7. Status lights, blinking light codes, troubleshooting lights, and POST error messages on page 79) is blinking (indicating sleep state). Press power button to exit sleep. 2. Reset BIOS to default (associated with **OS Power Management** in **Power Menu**) (4. Update BIOS and drivers on page 76) 3. Check power management settings in Windows **Power Options**. Disable sleep options if the issue is resolved. 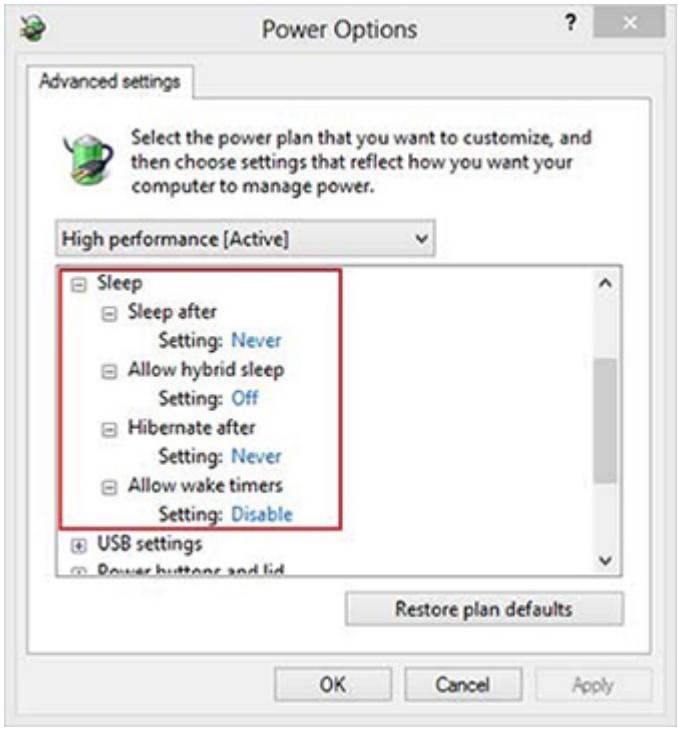 4. Screen saver is set. Press any key or touch touchpad to resume. 5. Verify that Display Choice is set to external video only. Toggle screen control key combination fn + f4 or Windows logo +P.
Tips	If you are using a docking station, set your notebook display as the primary display. When the computer is undocked, you might think it is in a power-saving state, but the screen image could actually appear on an external display device in the docking configuration.

Unresponsive

Use this information to troubleshoot issues with responsiveness.

Table 7-24 Issues, possible causes, and fixes

Items	Procedures
Symptom	*Possible causes*
Unresponsive	Program in use has stopped responding to commands.
	Troubleshooting steps
	1. If possible, use the Windows Task Manager to isolate and terminate the offending process. 2. Attempt the normal Windows shutdown procedure. 3. Restart the computer using the power button.

Slow performance

Use this information to troubleshoot performance issues.

Table 7-25 Issues, possible causes, and fixes

Items	Procedures
Symptom	*Possible causes*
Slow performance when performing small tasks, or even in idle mode	Processor is hot or hard drive is full.
	Troubleshooting steps
	Processor is hot 1. Verify that airflow to the computer is not blocked. 2. Verify that chassis fans are connected and working properly. Some fans operate only when needed. 3. Verify that the processor heat sink is installed properly.
	Hard drive is full 1. Transfer data from the hard drive to create more space on the hard drive. Microsoft recommends at least 200 MB to sync system files. 2. Perform disk defragmentation to consolidate fragmented data on the hard drive so it works more efficiently.
Tips	See Routine maintenance for performance improvement on page 134. See http://windows.microsoft.com/en-us/windows-8/free-up-disk-space. See http://windows.microsoft.com/en-us/windows/optimize-windows-better-performance#optimize-windows-better-performance=windows-vista.

HP Smart Adapter warning message

Use this information to troubleshoot power adapter warning messages.

Table 7-26 Issues, possible causes, and fixes

Items	Procedures
Symptom	*Possible causes*
Warning message appears in window	Less powerful AC adapter, BIOS out of date.
	
	Troubleshooting steps 1. Update BIOS, which might contain information that assigns an appropriate adapter for the configuration. 2. Update the latest **HP Hotkey Support** software from the drivers website. 3. Be sure that the power source is sufficient (where adapter is connected). 4. Use appropriate AC adapter (often supplied with system) for optimum system performance. 5. Test with a verified working AC adapter. 6. Test the adapter on a verified working computer. 7. Contact HP for configuration details.
Note	**HP Smart AC adapter warning message:** informs you that as power demands increase, the notebook might not perform at full capacity, which might result in longer battery-charging time. In cases of extreme power demands, the system might also throttle back the processor, or with systems that have a discrete video subsystem, a video balance mode might occur to further balance the power needs of the system. Because system processor functions always have priority over battery charging, charging delays occur first.

Incorrect time and date

Use the following information to troubleshoot time and date issues.

Table 7-27 Issues, possible causes, and fixes

Item	Procedure
Symptom	*Possible cause*
Incorrect date and time	System disconnected from the AC adapter and system battery power drained.
	Troubleshooting steps
	1. Connect the AC adapter to the computer.
	2. Let the battery recharge.
	3. Connect to the internet to synchronize the current time.
	Possible cause
	System disconnected from the AC adapter and system battery malfunction.
	Troubleshooting steps
	1. Replace the battery.
	2. Connect to the internet to synchronize the current time.

Display

Use these sections to troubleshoot display issues.

Display anomalies

The display panel is a field-replaceable unit (FRU) and must be replaced only by authorized technicians. However, HP highly recommends that users and technicians observe symptoms and use the HP PC Hardware Diagnostics (UEFI) tool before any replacement.

Symptom

This section includes common display issues with symptoms.

- Blank or black video
- Incorrect color, missing color, distorted image
- Flickering image
- Vertical lines (because of LDVS, decreased signal integrity, and data loss)
- Dead pixel (because of display liquid, internal transistor, and others)
- Horizontal lines (because of video memory)
- Distorted when hot (because of thermal issue)
- Cracked screen/image (physical damage)
- Light leakage/bleeding

  Contact support for assistance.
- Humming noise (due to frequency settings)

Contact support for assistance.

Table 7-28 Display anomaly illustrations

Display anomalies		
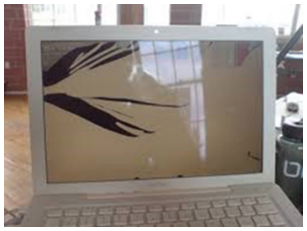 Cracked screen	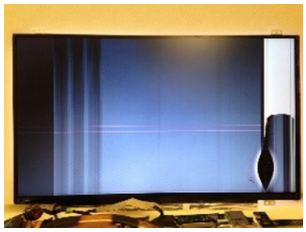 Cracked image	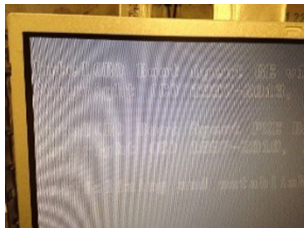 Blurred image
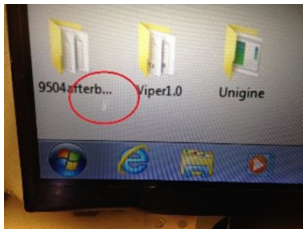 Dead pixel	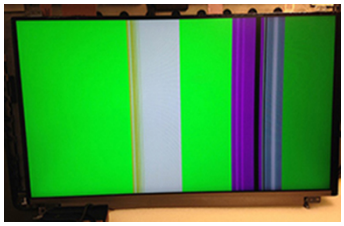 Vertical lines	 Horizontal lines

Quick check

Use these steps to check the display.

- Visually examine the display for cracked screen, liquid crystal leak, dirty spots on glass, and other issues.
- Reset and update BIOS and docking firmware.
- Update operating system (OS), graphics or video drivers (Intel, AMD, NVIDIA, and others).

  For custom images, HP highly recommends upgrading or installing Windows in UEFI mode or Legacy disabled to fully support hybrid graphics and avoid unexpected behaviors, for example, blue screen error, graphics or video issues, in the BIOS Legacy setting.
- Configure Windows settings (Power options, Screen brightness, Personalization, Screen resolution, and so on).
- Test with a verified working external display.
- Boot to Windows in safe mode.
- Test with a verified working operating system (for instance, shipping image).

HP PC Hardware Diagnostics (UEFI) for video test

Use this tool to quickly determine if the display issue is related to a real hardware issue.

To start HP PC Hardware Diagnostics (UEFI), when the computer is starting up, press the f2 key, select **Component Tests**, and then select **Video**.

There are three options:

- **Video Memory Check**: to test video memory
- **Palette Check**: to test the three video color components (red, green, blue)
- **Dead Pixel Check:** to check dead pixels in eight different colors (Dead Pixel Check is available with the HP PC Diagnostics 3-in-1 USB Key tool)

Review the video troubleshooting in the following Display section for specific issues and possible solutions. For additional information about display problems, see documentation provided by the product manufacturer.

Display assembly diagram

The display assembly diagram shows basic video components: system board, graphics cards, display cables, display connectors, operating system (OS), graphics driver, and LCD display panel. Any component or a combination of these components can contribute to a video issue.

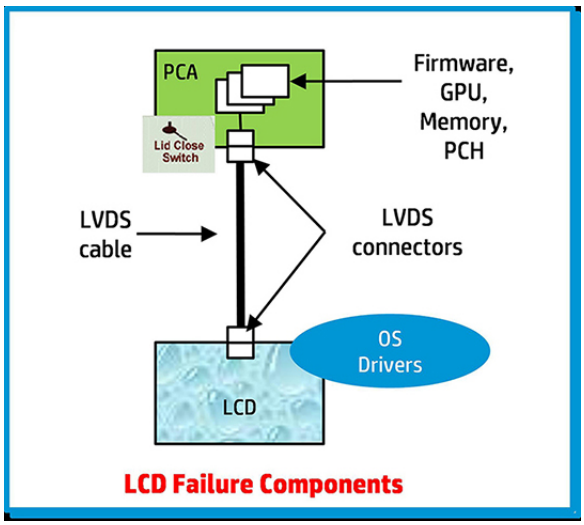

NOTE: The lid close switch is a Hall-effect sensor located in the top cover. When the display is closed, the sensor acts like a switch is closed. A notebook can force a video output to an external monitor, or go to hibernation or standby mode through power management. If the display screen does not light up when the display is open, the lid close switch (Hall-effect sensor) could be faulty.

Dead pixel

Display panel might show one or more pixels that are not properly lit when displaying a single color over the screen area. Use HP PC Hardware Diagnostics (UEFI) tool to determine those defective pixels.

There is no solution for dead pixels. See Display issue: pixel anomalies on page 140 for the HP dead pixel policy.

No video (internal)

Use this information to troubleshoot video issues.

Table 7-29 Issues, possible causes, and fixes

Items	Procedures
Symptoms	*Possible causes*
No internal video with certain programs (for example, video-intensive games)	Display resolution, brightness, faulty lid switch, running a program requiring a higher resolution than the display screen can support. Faulty lid switch might put the system into sleep or hibernation mode.
	Troubleshooting steps
	Use an external monitor with higher resolution. Test with external monitor using HDMI or HP port. Press the power button and close the computer lid to force video output to external video. If there is still no video, contact support.
References	See section No video (with power) on page 95 for display information.

No video (external)

Use this information to troubleshoot external video issues.

Table 7-30 Issues, possible causes, and fixes

Items	Procedures
Symptom	*Possible causes*
No image on external monitor	External monitor, resolution, display configuration, drivers.
	Troubleshooting steps
	1. Be sure that external monitor is compatible with the computer. 2. Be sure that external monitor is turned on. 3. Press any key to exit the power-saving mode. 4. Adjust the brightness of the monitor. 5. Test with a verified working monitor. 6. Test the monitor via internal ports (VGA, DP ports). 7. Install latest video driver. 8. Reset the screen resolution as described in the documentation. 9. Configure display choice, and then force output to external video by closing the notebook lid or pressing fn + f4 to switch screen output.

DisplayPort/VGA

Use this information to troubleshoot DisplayPort and VGA issues.

See No video (external) on page 110.

HDMI

Use this information to troubleshoot HDMI issues.

Table 7-31 Issues, possible causes, and fixes

Items	Procedures
Symptoms • Display issue • Sound issue	*Possible causes* Cable, connection, settings.
	Troubleshooting steps **Quick Check** 1. Verify that the HDMI device input source is set correctly (for example, HDMI1). 2. Be sure you are using the correct HDMI cable. 3. Check connection and reconnect the HDMI cable. 4. Verify whether sound output is configured correctly in **Control Panel > Sound Manager**.
	1. Perform hard reset (4. Update BIOS and drivers on page 76). 2. Update BIOS and drivers (4. Update BIOS and drivers on page 76) when you hear sound but do not see video on HDTV.

No or bad external video via docking

Use this information to troubleshoot video issues while docking.

Table 7-32 Issues, possible causes, and fixes

Items	Procedures
Symptoms	*Possible causes*
No or bad image on external monitor via ports of docking station (such as VGA, DP, TB, display port, and others)	Rooted from system board, software or drivers, dock connectors, docking station hardware or firmware, dock video ports (DP, VGA, and others).

Table 7-32 Issues, possible causes, and fixes (continued)

Items	Procedures
	Troubleshooting steps 1. Be sure that external monitor is turned on. 2. Be sure that external monitor is compatible with the computer. 3. If applicable, plug the dock into different Type-C ports. For more information, see the technical whitepaper titled "HP Elite Dock with Thunderbolt 3 & HP ZBook Dock with Thunderbolt 3." Go to http://www.hp.com/ and search for HP ZBook Thunderbolt 3 Dock User Guide. 4. If the screen image is distorted, try a DP-to-VGA adapter. Connect the adapter to each DisplayPort and VGA port of the dock. 5. Test the monitor via internal ports (such as VGA, DP, HDMI, and others). 6. Verify that dock connectors of the notebook and the dock are clean, without dust, debris (for example, using air duster). 7. Ideally, use a verified working operating system or system connected to the dock to isolate the issue of the current operating system. 8. Ideally, use a verified working docking station to isolate the faulty dock. 9. Update to latest dock firmware. Follow the installation instructions carefully. You may want to try a DP-to-VGA adapter if you have a distorted screen image. Connect the adapter to each DisplayPort of the dock. If you still cannot update the dock, attempt to update it on a confirmed working notebook before having the dock replaced.

Incorrect or missing color/distorted image

Use this information to troubleshoot image issues.

Table 7-33 Issues, possible causes, and fixes

Items	Procedures
Symptoms System works normally but the display shows: • Missing or strange color • Image distortion	*Possible causes* Loose connection, display cable, display, graphics card.
	Troubleshooting steps **Verify with external monitor** 1. Use combination fn + f4 to enable output to external monitor. 2. Close the lid. If the external monitor also shows incorrect color, it is a graphics card issue. Test with a verified working graphics card.

Table 7-33 Issues, possible causes, and fixes (continued)

Items	Procedures
	Verify monitor cable and cable connection (monitor disassembly required). Be sure the monitor cables are not pinched or damaged. Be sure the monitor cables have good connection at both ends (system board and display panel). • If moving cables affects the image, the monitor cable is the cause of the issue. Test with a confirmed working cable. • If moving cables does not affect the image, the monitor has an issue. Test with a confirmed working monitor.

Touch screen

Use this information to troubleshoot touch screen issues.

Table 7-34 Issues, possible causes, and fixes

Items	Procedures
Symptoms Unresponsive Inaccurate	*Possible causes* Dirt and smudge, driver, touch display configuration, power management.
	Troubleshooting steps **Quick check** Turn off the computer, spray glass cleaner onto a soft, damp cloth, and gently wipe the screen to remove dirt and smudge. **NOTE:** Do not spray cleaner directly onto the screen.

Table 7-34 Issues, possible causes, and fixes (continued)

Items	Procedures
Configure the touch display in **Control Panel > Tablet PC Settings** 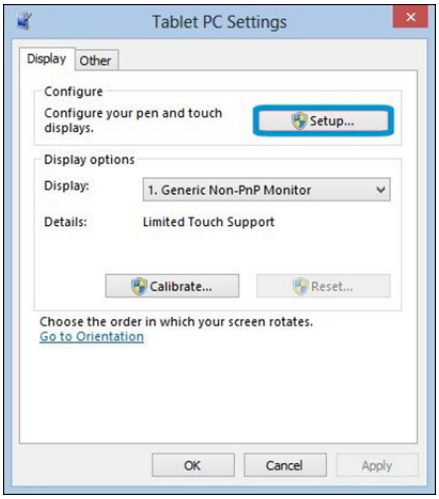	1. Restart the computer. 2. Verify touch screen and graphics drivers. 3. Configure the touch display to identify the screen as a touch screen, as shown in the image at left. 4. Calibrate the screen and reset if touch functionality is still not working correctly. 5. Perform diagnostic test in HP Hardware Diagnostics under **Component Tests > Touch Screen**. If the diagnostics tests pass but the touch screen still does not respond, continue following the steps. 6. Adjust the power management settings for your touch screen. If the touch screen stops working after waking from sleep, adjust the power management settings so that the touch screen device stays active while the computer is in sleep mode. 7. Perform Microsoft System Restore, and restore to a time when the system was working. 8. Perform HP System Recovery if none of the previous actions resolve the issue.

I/O devices

Use this information to troubleshoot I/O device issues.

NOTE:

- Be sure that external devices are supported and compliant (for example, USB Type-C, Thunderbolt, PCI Express).
- If you have problems with external devices not provided by HP, contact device manufacturers for compatibility and latest drivers before troubleshooting (for example, USB devices, Thunderbolt devices, PCI express card reader, VGA, display, HDMI monitors, speakers).
- Be sure I/O devices are properly inserted into the I/O ports, and then be sure that Windows Device Manager recognizes the I/O devices.

Keyboard

Use this information to troubleshoot keyboard issues.

Table 7-35 Issues, possible causes, and fixes

Items	Procedures
Symptoms	*Possible causes*
Keystrokes not recognized	Dust trapped under keycap, loose keycap, loose keyboard connection, defective keyboard.
Characters not matched	

Table 7-35 Issues, possible causes, and fixes (continued)

Items	Procedures
	Troubleshooting steps 1. Inspect the keyboard for any signs of dust, liquid, or debris trapped under sticky keys that might prevent keystroke recognition. 2. Check for incomplete connection between keyboard and system board by verifying that caps lock or num lk light turns on when you press the key. 3. Verify whether the keyboard is recognized in Windows Device Manager, and verify whether the keyboard driver is installed properly. 4. Test with a working external keyboard (such as a USB keyboard). Also test in Windows for special keys (caps lock, shift, ctrl, fn, Windows, alt) if necessary. 5. Test with HP PC Hardware Diagnostics (UEFI) to isolate a hardware issue from a software issue. 6. Verify that BIOS is up to date. If so, resetting BIOS to default might help. 7. Test with a verified working operating system, or restore the operating system to be sure that the issue is not caused by items such as different language settings, sticky keys feature, and so on. 8. Verify that keyboard flex cables are fully inserted and in good condition.
	The following steps are for authorized providers and technicians.
	1. Verify that keyboard flex cable is in good condition (no delamination or torn cable end, no missing or cracked tracks, pads). 2. Verify that keyboard flex cable ends are fully inserted and aligned with connectors on system board, and those connector tabs are properly closed. Reseat cables. 3. Replace new internal keyboard and retest.
Tips	If a key works only when pressed with force, inspect and remove debris trapped under keycap.

Keyboard pointing stick (select products only)

Use this information to troubleshoot pointing stick issues.

Table 7-36 Issues, possible causes, and fixes

Items	Procedures
Symptom	*Possible causes*
Pointing stick not working properly	Dust trapped under pointing stick, loose pointing stick cap.
	Troubleshooting steps 1. Inspect for any signs of dust or liquid spill that prevent pointing stick from working. 2. Check whether pointing stick cap is loose, and reseat it if necessary.
	The following steps are for authorized providers and technicians.

Table 7-36 Issues, possible causes, and fixes (continued)

Items	Procedures
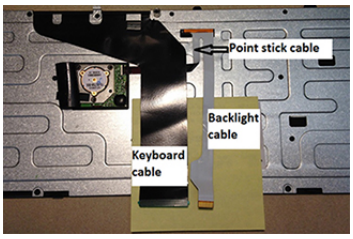 Example of back of keyboard, including keyboard, pointing stick, and backlight cables.	1. Verify whether keyboard flex cables are in good condition (no delamination or torn cable end, no missing or cracked tracks, pads). 2. Verify that keyboard flex cable ends are fully inserted and aligned with connectors on system board and back of keyboard, and that connector tabs are properly closed. 3. Reseat pointing stick cables.

Keyboard backlight

Use this information to troubleshoot keyboard backlight issues.

Table 7-37 Issues, possible causes, and fixes

Items	Procedures
Symptom	*Possible causes*
Backlight function not working properly	Backlight disabled, loose connection.
	Troubleshooting steps **NOTE:** Not all notebook computers have backlit keyboards. A keyboard function key lets you turn the light on and off. Verify that backlit feature is not disabled by pressing a combination of fn + backlit key.
The following steps are for authorized providers or technicians.	
	1. Verify that backlight flex cables are in good condition (no delamination or torn cable end, no missing or cracked tracks or pads). 2. Verify that backlight flex cable ends are fully inserted and aligned with connectors on system board and that connector tabs are properly closed. 3. Reseat backlight cable.

Touchpad

Use this information to troubleshoot touchpad issues.

Table 7-38 Issues, possible causes, and fixes

Items	Procedures
Symptoms	*Possible causes*
Not working properly	Touchpad turned off, driver, settings.

Table 7-38 Issues, possible causes, and fixes (continued)

Items	Procedures
(1) Touchpad on/off button **(2)** Touchpad 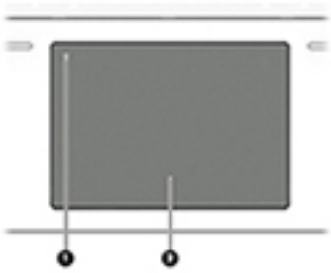	*Troubleshooting steps* 1. Ensure touchpad on/off light is not amber (disabled). Double tap to enable. 2. Verify whether touchpad device is listed in **Device Manager > Mouse and other pointing devices**. 3. Install the latest touchpad driver. 4. Adjust touchpad settings (**Control Panel > Mouse**). 5. Test touchpad controller using the HP PC Hardware Diagnostics (UEFI) tool (f2> **Component Tests > Mouse Test > Pointer Test & Drag and Drop Test**).
The following steps are for authorized service providers/technicians.	
	1. Check the touchpad cable for damage or a loose connection, and then reseat the touchpad cable. 2. If issue persists, replace the touchpad and verify the change.

Network connectivity (RJ-45 jack)

Use this information to troubleshoot network issues.

Table 7-39 Issues, possible causes, and fixes

Items	Procedures
Symptoms • Unable to find networks (yellow warning symbol, or bang.) • Connection dropouts • Slow performance	*Possible causes* Network source, cable, connection, RJ-45 (network) jack, driver, settings.
	Troubleshooting steps **Quick Check:** verify the network status lights that are supposed to flash when there is network activity.

Network connectivity wireless (WLAN)

Use this information to troubleshoot wireless connectivity issues.

Table 7-40 Issues, possible causes, and fixes

Items	Procedures
Symptoms • Unable to find networks (yellow bang) • Connection dropouts • Slow performance	*Possible causes* Network source, cable, connection, wireless module, driver, settings.

Table 7-40 Issues, possible causes, and fixes (continued)

Items	Procedures
The following steps are for authorized providers or technicians.	
	1. Verify that the wireless module and its antenna cables are fully inserted and in good condition (see WLAN module removal and replacement section). Reseat wireless module and antenna connection. 2. Verify the module antenna cable connection is not loose. 3. Verify that antenna cables are properly connected to the MAIN and AUX terminals (see WLAN module removal and replacement section).

WWAN

Use this information to troubleshoot WWAN issues.

Table 7-41 Issues, possible causes, and fixes

Items	Procedures
Symptom	*Possible causes*
Unable to find networks or service	Network source, cable, connection, driver, settings.
	Troubleshooting steps 1. Update to the latest driver and utility. 2. Check with network service provider for signal coverage. 3. Be sure signal strength is good. 4. Be sure that your service is active.
The following steps are for authorized providers or technicians.	
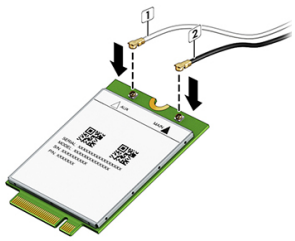	• Verify module and antenna cable connections are not loose. • Verify antenna cables are properly connected to the correct terminals. For example, the antenna cable labeled **1** connects to the Main terminal labeled **1**. The antenna cable labeled **2** connects to the Aux terminal labeled **2**.

USB

Use this information to troubleshoot USB port issues.

Table 7-42 Issues, possible causes, and fixes

Items	Procedures
Symptoms • USB devices are not recognized • USB devices are not charging	*Possible causes* USB devices do not have the latest software drivers, port has insufficient power, or the devices are not compliant. **NOTE:** USB Type-C uses a different connector.
Examples of USB device Not Recognized 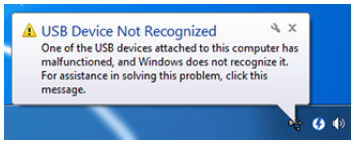 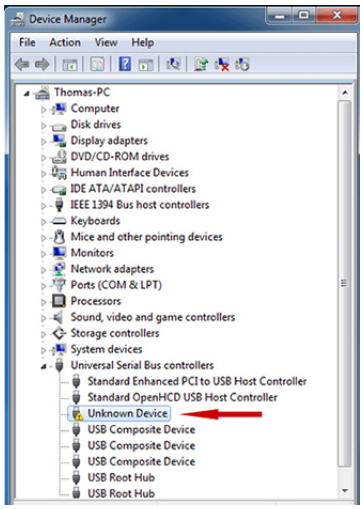 	*Troubleshooting steps* 1. Unplug the USB device. Restart the computer (wait for 2–5 minutes) to reset the USB port or hub in case of a power surge. 2. Perform a soft reset (9. Soft reset (Default Settings) on page 83), and verify that the USB device is recognized. 3. Verify whether the USB device is recognized in **Device Manager > Universal Serial Bus Controller**, or the USB is recognized without a yellow warning symbol, or bang. 4. Verify whether the latest USB driver, USB chipset driver, or both are installed. You can remove or reinstall the USB driver. 5. Be sure the USB device is supported. For example, USB 3.0 device requires more power draw (0.9 A) from a USB port than a USB 2.0 device (0.5 A). As a result, identify the USB charging port to be used for charging a USB device, or an external AC power adapter might be required for an external USB storage device to work properly. 6. Test with verified working USB devices (keyboard, mouse, USB key) to be sure USB ports are functional. 7. Test the USB device on a verified working computer to be sure the USB device is not malfunctioning.

Smart card reader

Use this information to troubleshoot smart card reader issues.

Table 7-43 Issues, possible causes, and fixes

Items	Procedures
Symptoms	*Possible causes*
• Not recognized	Physical damage, incorrect insertion, dirt, driver, malfunctioning card reader.
• Unable to write	**NOTE:** Some cards have a read-write security switch on the card. Be sure that switch is set to Write Enabled before attempting to write data to it.

Table 7-43 Issues, possible causes, and fixes (continued)

Items	Procedures
Card Reader Removal Policy 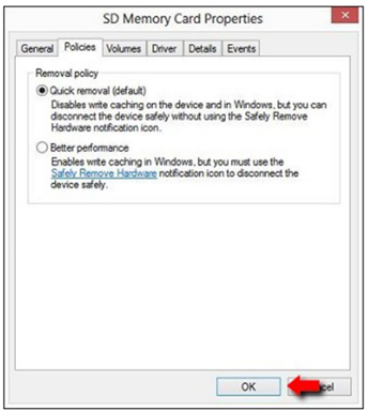	*Troubleshooting steps* 1. Verify card reader removal policy. 2. Be sure that the card has no physical damage. 3. Inspect the ends of the memory cards for dirt or material closing a hole or spoiling a metal contact. Clean the contacts with a lint-free cloth and small amounts of isopropyl alcohol. Replace the memory card if necessary. 4. Reinstall and update the drivers for the card reader. 5. Be sure that the smart card reader is compliant with ISO 7816 Class A, B, and C. 6. Reinsert the card reader facing the correct way as described in its documentation. 7. Check reader function with a verified working card. **IMPORTANT:** If the card reader has an in-use indicator light, do not insert or remove memory cards while the light is flashing. Doing so might cause loss of data on the card or might permanently damage the card reader.

Speaker, headphone - audio issues

Use this information to troubleshoot audio issues.

Table 7-44 Issues, possible causes, and fixes

Items	Procedures
Symptoms	*Possible causes*
• No sound from external or internal speakers • Distorted sound, too soft, too loud, intermittent	Volume turned down, sound card not recognized, malfunctioning hardware, electronic interference.

Table 7-44 Issues, possible causes, and fixes (continued)

Items	Procedures
	Troubleshooting steps 1. Remove any device connected to the audio jack to enable the internal speaker. 2. Close all open programs. 3. Perform one of these tasks: • Adjust volume by pressing fn + f6 or f7. Be sure that volume button light is not amber (mute). • Adjust Windows volume control by selecting the speaker icon on the Windows taskbar. Be sure that the sound is not muted. 4. Verify that the sound card is detected in Windows Device Manager. 5. Reinstall the **latest audio driver**. 6. Test audio device using the HP PC Hardware Diagnostics (UEFI) tool (f2 > **Component Tests > Audio**). 7. Test with a verified working operating system. If issue is resolved, restore full operating system. 8. Test with verified working external speakers or headset. 9. Reseat internal speaker connections. 10. Test with verified working internal speakers. 11. Replace internal speakers.
No sound from headphones	1. Perform one of these tasks: • Adjust volume by pressing fn + f6 or f7. Be sure that volume button light is not amber (mute). • Adjust Windows volume control by selecting the speaker icon on the Windows taskbar. Be sure that the sound is not muted. 2. Check headphone cable connection. 3. Test with a verified working audio board. 4. Replace audio board and verify the change.
No sound from external speakers	1. Verify that external speakers are turned on. 2. Disconnect headphones from headphone jack. 3. Perform one of these tasks: • Adjust volume by pressing fn + f6 or f7. Be sure that volume button light is not amber (mute). • Adjust Windows volume control by selecting the speaker icon on the Windows taskbar. Be sure that the sound is not muted. 4. Check for possible interference from devices nearby that might affect the audio (cell phone or portable communications handset).

Thunderbolt

Use this information to troubleshoot Thunderbolt (TB) issues.

Table 7-45 Issues, possible causes, and fixes

Items	Procedures
Symptom	*Possible causes*
Thunderbolt device not working	BIOS, drivers, and user settings.
	Troubleshooting steps

1. Update to the latest BIOS and choose appropriate TB Port settings.
2. Reset **User Account Settings** to default.
3. Update Intel Thunderbolt software that includes firmware version (for TB controller), driver version (operating system driver), and application version.

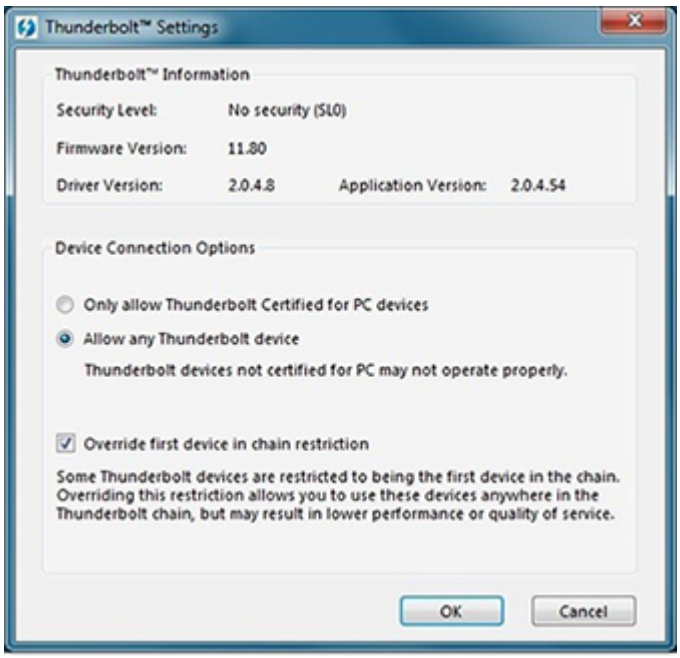

4. Verify that Windows Device Manager detects the TB device.
5. Verify cable connection to TB port.
6. Test with a verified working TB board, if possible.

NOTE: Thunderbolt is new technology. Thunderbolt cable and Thunderbolt device must be compatible with Windows. To determine whether your device is Thunderbolt Certified for Windows, see https://thunderbolttechnology.net/products.

Storage

Use this information to troubleshoot storage issues.

NOTE:

- Back up all critical data before troubleshooting the drive.

- Before contacting support, HP recommends that you run a drive (HDD, SSD, M.2 drive) test using the HP PC Hardware Diagnostics (UEFI) tool on the suspected failed drive.
- Diagnose the hard drive using BIOS, Diagnostics built in the shipping image, or an external USB (https://support.hp.com/us-en/help/hp-pc-hardware-diagnostics).
- HP recommends the Drive Quick Test to quickly (less than 10 minutes) identify the malfunctioning drive. If the issue still exists, run Extensive Test (more than two hours, or loop mode, which runs until an error occurs).
- If any test fails, record failure code and contact support for instructions about how to order a replacement hard drive.
- If all of the tests pass, the hard drive is not damaged. As a rule, HP will not replace a hard drive under warranty that does not fail the HP Hard Drive Self-Test.
- If there is no physical problem with the hard drive or memory, then try reinstalling the Windows operating system to troubleshoot the problem.

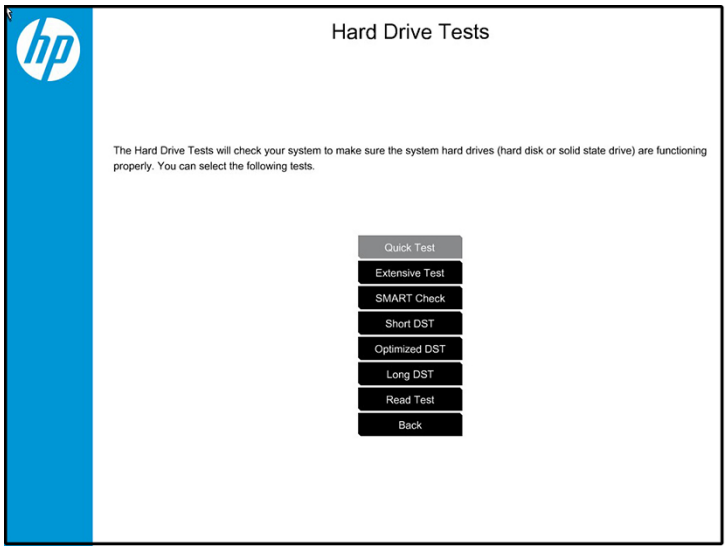

Hard drive or SSD not recognized

Use this information to troubleshoot storage device issues.

Table 7-46 Issues, possible causes, and fixes

Items	Procedures
Symptom	*Possible causes*
Hard drive is not recognized during POST	Loose connection, faulty hard drive, faulty drive configuration/BIOS setting.

Table 7-46 Issues, possible causes, and fixes (continued)

Items	Procedures
	Troubleshooting steps 1. Perform a hard reset (8. Hard reset on page 82). 2. Reset BIOS to default. 3. Verify hard drive connection and flex cable. Reseat hard drive and cable connection. For multiple storage devices, keep the primary drive with the operating system and remove other devices. 4. Use the HP Hardware Diagnostics tool to verify that the drive is recognized and test it. 5. If the hard drive fails diagnostics, record failure and have the drive replaced. 6. Identify when the issue is related to software. If the hard drive passes diagnostics, test the drive on a verified working computer. If the failure follows the drive, reinstall the operating system to be sure that software is not an issue. 7. Test with a verified working hard drive. If it is still not recognized, the system board is faulty. **NOTE:** If the drive is seen in BIOS and Diagnostics, try a secure erase before replacing a drive as this might resolve related issues.

No boot to operating system (no read-write error)

Use this information to troubleshoot issues with booting to the operating system.

Table 7-47 Issues, possible causes, and fixes

Items	Procedures
Symptoms • POST error message: Boot Device not found (3F0) • Hang when booting to operating system	*Possible causes* Operating system, loose connection, faulty hard drive, BIOS configuration, Secure Boot.
	Troubleshooting steps 1. Verify whether Secure Boot is enabled in BIOS. Secure Boot prevents legacy boot devices from starting the computer, including bootable CDs and DVDs. 2. Reset BIOS to default. Be sure that BIOS **Boot Mode** in **Boot Option** is set up properly for bootable device and its operating system (for example, UEFI Native for an older Windows OS). Another example, choosing **Legacy Boot Order** for a UEFI device causes "Boot Device not found (3F0)" error. 3. Verify hard drive connection and flex cable. Reseat connection. For multiple storage devices, keep the primary drive with the operating system and remove other devices. 4. Use PC Hardware Diagnostics tool to test. Record failure code and have the hard drive replaced. 5. If there is no error, reinstall the operating system using HP Restore. 6. Test with a verified working operating system hard drive, if available.

Table 7-47 Issues, possible causes, and fixes (continued)

Items	Procedures
Note	If there is a hard drive POST error message, see POST error messages and user actions on page 133.

Read-write error

Use this information to troubleshoot read and write errors.

Table 7-48 Issues, possible causes, and fixes

Items	Procedures
Symptoms • POST error message (for example, error code 301) • Hang when working on data, files, documents	*Possible causes* Loose connection, faulty hardware. *Troubleshooting steps* 1. Perform a hard reset (8. Hard reset on page 82). 2. Reset BIOS to default (9. Soft reset (Default Settings) on page 83). 3. Verify the drive connection and flex cable. Reseat connection (10. Reseat cables and connections on page 83). 4. Use the HP Hardware Diagnostics tool to test. If failed, record failure code and have the hard drive replaced. 5. If no error with the HP PC Hardware Diagnostics (UEFI) tool, try to repair the hard drive and its files in Windows (using command "`CHKDSK /f /r /x`"). Use HP Restore to reinstall the operating system, if needed. 6. Test with a verified working hard drive. If it is not recognized, the system board is faulty.
Note	If there is a hard drive POST error message, see POST error messages and user actions on page 133.

Slow performance

Use this information to troubleshoot performance issues.

Table 7-49 Issues, possible causes, and fixes

Items	Procedures
Symptoms Slow performance even when performing small read-write operations	*Possible causes* Operating system files, hard drive is full. *Troubleshooting steps* 1. Transfer data from the hard drive to create more space. Microsoft recommends at least 200 MB to sync system files. 2. Perform disk defragmentation to consolidate fragmented data on the hard drive so that it works more efficiently. **NOTE:** Do not defragment an SSD.

Table 7-49 Issues, possible causes, and fixes (continued)

Items	Procedures
Tips & tricks	For optimal system performance, place your operating system and all of your most commonly used applications and files on the fastest hard drive (SSD) and fastest areas on the drive (primary partition of 200 GB max). See Routine maintenance for performance improvement on page 134.

Blue screen (BSOD) error

A faulty hard drive can cause a blue screen error. Perform the drive tests using the HP Diagnostics Tool to be sure that the drive is functional.

If all of the tests are successful, see Common blue screen error messages on page 135 for detailed troubleshooting steps.

Noisy hard drive

Use this information to troubleshoot a noisy hard drive.

IMPORTANT: Because an SSD has no moving parts, it does not make loud or clicking noises.

Depending on type and rotational speed, some hard drives make more noise than others.

Not all noises are related to the fan or hard drive.

Table 7-50 Issues, possible causes, and fixes

Items	Procedures
Symptoms	*Possible causes*
• Loud noise from hard drive • Clicking noise from hard drive • Still boots to operating system and operates normally	BIOS, hard drive firmware, driver, faulty drive, power supply (AC adapter).
	Troubleshooting steps 1. Update BIOS and hard drive firmware. 2. Examine AC adapter to be sure that it is not faulty or overloaded. Disconnect all peripherals (USB storage, dock, and others). 3. Remove hard drive to isolate the noise. 4. Test the hard drive on a verified working computer if the noise continues. If the hard drive makes the same noise or clicking sounds, the sounds are either normal sounds for the hard drive or a fault with the hard drive. 5. Verify original hard drive connection and flex cable. Reseat hard drive and connection. 6. Run HP PC Hardware Diagnostics (UEFI). If failed, record failure code and replace hard drive. 7. If you find no error with HP PC Hardware Diagnostics (UEFI), perform disk defragmentation. Some hard drives make a clicking noise when highly fragmented.

Table 7-50 Issues, possible causes, and fixes (continued)

Items	Procedures
Tips	For optimal system performance, place your operating system and all of your most commonly used applications and files on the fastest hard drive or SSD and on the fastest areas on the drive (primary partition of 200 GB max). See Routine maintenance for performance improvement on page 134.

Mechanical

Use this information to troubleshoot mechanical issues.

Noise (sound)

Use this information to troubleshoot abnormal noise issues.

Table 7-51 Issues, possible causes, and fixes

Items	Procedures
Symptoms	*Possible causes*
Computer emits abnormal noise	Aside from basic components (power adapter, supply, fan, speaker, hard drive, optical drive, display panel, external devices), it is also common for electronic components to produce noise.
	Troubleshooting steps 1. Inspect external power source and change to verified working one. 2. Determine whether the noise comes from AC power adapter. Test with a verified working AC adapter.
	Disconnect external devices and all cables connected to the computer to isolate issue to computer only.
Noisy fan	Determine whether the noise comes from the fan. Disconnect the fan briefly to isolate whether noise originates from fan. If noise is absent with fan disconnected, see Fan runs constantly on page 128.
Noisy hard drive	Determine whether the noise comes from the hard drive. See Noisy hard drive on page 126.
Noisy optical drive	1. Determine whether the noise comes from an optical drive. 2. Remove CD/DVD from the optical drive.
Noisy speaker	1. Determine whether the noise comes from speaker. 2. Test with a verified working external headset/speaker.
Noisy display	Determine whether the noise comes from display panel (humming noise). Change display frequency settings. See Display on page 107.
The section below is intended for authorized service providers and technicians.	
	1. After disassembling the chassis, inspect components of the interior for excessive wear or damage. 2. If noise issues persist, proceed with process of elimination for battery, AC adapter, or boards.

Fan runs constantly

Use this information to troubleshoot a constantly running fan.

Table 7-52 Issues, possible causes, and fixes

Items	Procedures
Symptoms • Fan never stops running • Generates heat • Decreased computer performance	*Possible causes* • BIOS not up to date. • Thermal condition (fan, air flow)—fan might not be defective but must run constantly to remove excess heat generated by electrical components. • Inappropriate configuration.
	Troubleshooting steps **General actions** 1. Verify whether BIOS is set to **Fan Always on while on AC Power** F10 Setup. When starting the computer, press f10 to open Setup, and then select **Advanced > Built-In Device Options Menu**. 2. Update BIOS and drivers (4. Update BIOS and drivers on page 76) and reset BIOS to default. BIOS can implement new fan characteristics and updates for other components. 3. Perform a hard reset (8. Hard reset on page 82). Performing a hard reset can reset recorded thermal values in memory.
	Thermal-related issue 1. Verify that fan is spinning. Reseat fan cable before moving to next step. a. Check fan and connection. Reseat fan cable. b. Be sure that no obstructions or dust are in heat sink fan, heat sink fin, or vent. c. Test fan using HP PC Hardware Diagnostics (UEFI) tool. Be sure that the fan is not producing loud noise and that fan blades spin correctly. d. Test with a verified working fan. e. Replace the fan. 2. Verify thermal solution Use the Thermal Monitor tool in HP PC Hardware Diagnostics (UEFI), which is available only to authorized service providers and technicians, to run a stress test (processor and GPU) and verify that thermal sensors are within limits after thermal condition is serviced.
	User configuration Change Power Options in Windows (for example, choosing **Balanced mode** instead of **High performance**). High performance and extensive graphics might cause the fan to run constantly to release the heat.
Notes	BIOS currently omits fan presence detection to shorten startup time delay to less than 4 seconds. Therefore, the fan error is generated based on previous startup to operating system that found system fan error. Fan often is part of thermal solution, including heat sink, heat sink fin/muffler, and thermal grease. Fan replacement requires restart and fan function verification using HP PC Hardware Diagnostics (UEFI) tool.

Thermal shutdown (hot)

Use this information to troubleshoot a thermal shutdown.

Table 7-53 Issues, possible causes, and fixes

Items	Procedures
Symptoms Similar to fan runs constantly issue (Fan runs constantly on page 128) • System shutdown • Abnormal heat • Continually running fan • Decreased computer performance	*Possible causes* BIOS not up to date, thermal condition (fan, air flow)
	Troubleshooting steps 1. Update BIOS and drivers (4. Update BIOS and drivers on page 76) and reset BIOS to default. BIOS can implement new fan characteristics and updates for other components. 2. Perform a hard reset (8. Hard reset on page 82). Performing a hard reset can reset recorded thermal values in memory. 3. Determine whether you are using a correct AC adapter. 4. Be sure to turn power off completely when putting a notebook in a travel bag.
	Thermal-related issue 1. Verify thermal condition: a. Check fan and connection. Check if fan is spinning when computer is on. Reseat fan cable. b. Be sure that no obstructions or dust are in heat sink fan, fin, or vent. c. Be sure that the notebook is not sitting on a hot surface that blocks vent intakes. d. Test fan using HP PC Hardware Diagnostics UEFI tool. Be sure that the fan is not producing a loud noise and that fan blades spin correctly. e. Test with a verified working fan. f. Remove old thermal compound and pads, and replace properly with new pads. 2. Verify thermal solution: Use Thermal Monitor tool (available only to authorized service providers and technicians) to run stress test (processor and GPU), and verify that thermal sensors are within limits after thermal condition is serviced.

Additional information

The following sections provide additional information that you can use during the troubleshooting process.

Acronyms

These acronyms are used in this chapter.

Blue screen (BSOD): A Windows error screen that can occur if a problem causes your computer to shut down or restart unexpectedly.

When you experience this type of error, you cannot see items such as the Start menu or the taskbar when your computer is turned on. Instead you might see a blue screen with a message that your computer ran into a problem and needs to restart.

CPU: Central processing unit

DIMM: Dual in-line memory module

Daughterboard: Type of circuit board that plugs into or is attached to the system board or similar expansion card to extend its features and services

GPU: Graphics processor unit

GTS: General troubleshooting step

HDD: Hard drive

KB: Keyboard

LVDS: Low-Voltage Differential Signaling

MSG: Maintenance and Service Guide

mWS: Mobile workstations

OS: Operating system

PC: Personal computer

POST: Power-On Self-Test

SSD: Solid-state drive

TSG: Troubleshooting Guide

UEFI: Unified Extensible Firmware Interface

WLAN: Wireless local area network

WS: Workstations

WWAN: Wireless wide area network

Blinking lights and startup error codes

In some cases, when the host processor is not executing code or does not have the necessary code to drive the display, light blink codes inform you of a problem.

Table 7-54 Blinking lights and boot error codes

Blink codes	Error
Amber battery light: blinks 1 Hz continuously	Embedded Controller unable to load firmware

Table 7-54 Blinking lights and boot error codes (continued)

Blink codes	Error
Caps and num lock lights = 1 blink	Processor not executing code
Caps and num lock lights = 2 blinks	BIOS recovery code unable to find valid BIOS recovery image
Caps and num lock lights = 3 blinks	Memory module error
Caps and num lock lights = 4 blinks	Graphics controller error
Caps and num lock lights = 5 blinks	System board error
Caps and num lock lights = 6 blinks	Intel Trusted Execution Technology (TXT) Error
Caps and num lock lights = 7 blinks	Sure Start unable to find valid BIOS Boot Block image
Caps and num lock lights = 8 blinks	Sure Start has identified a problem (Manual Recovery Policy Set)

Processor not executing code

This computer experienced a problem due to the failure of certain code to execute, resulting in a failed startup of the processor.

The issue could be related to the processor or the system board in the computer. If the processor is socketed, be sure that the processor is seated correctly in the socket. If this error reoccurs, see General troubleshooting steps on page 72.

NOTE: The computer attempts to notify you of this problem through a series of blinking lights. When you attempt to turn on the computer from an Off or Hibernated state, lights associated with the caps lock and num lk keys both **blink once**, followed by a pause, and then continue in a repeating pattern.

BIOS recovery code unable to find valid BIOS recovery image

This computer has experienced a problem in locating a valid BIOS image, resulting in a failed startup.

You can resolve this problem by placing a clean copy of the system BIOS on a USB key or in the appropriate hard drive directory and performing a restart. If this error reoccurs, see General troubleshooting steps on page 72.

NOTE: The computer attempts to notify you of this problem through a series of blinking lights. When you attempt to turn on the computer from an Off or Hibernated state, lights associated with the caps lock and num lock keys both **blink twice**, followed by a pause, and then continue in a repeating pattern.

Memory module error

This computer has experienced a memory initialization problem resulting in a failed startup. This issue might be related to the memory modules in the computer. You can resolve this problem by ensuring that memory modules are correctly inserted and seated.

If this error reoccurs, you must use a service event to determine the source of the error (memory modules or system board) and take the appropriate corrective action.

NOTE: The computer attempts to notify you of this problem through a series of blinking lights. When you attempt to turn on the computer from an Off or Hibernated state, lights associated with the caps lock and num lock keys both **blink three times**, followed by a pause, and then continue in a repeating pattern.

Graphics Controller Error (No Controller)

This computer has experienced a graphics controller initialization problem resulting in a failed startup. This issue might be related to the graphics controller in your machine.

You can resolve this problem by ensuring that the graphics controller module is seated correctly in machines with modular graphics. If this error reoccurs, you must use a service event to identify the source of the error and take the appropriate corrective action.

NOTE: The computer attempts to notify you of this problem through a series of blinking lights. When you attempt to turn on the computer from an Off or Hibernated state, lights associated with the caps lock and num lock keys both **blink four times**, followed by a pause, and then continue in a repeating pattern.

Failure System Board Error

This computer has experienced a system board initialization problem resulting in a failed startup. This issue might be related to the system board in the computer. You must use a service event to identify the source of the error and take the appropriate corrective action.

NOTE: The computer attempts to notify you of this problem through a series of blinking lights. When you attempt to turn on the computer from an Off or Hibernated state, lights associated with the caps lock and num lock keys both **blink five times**, followed by a pause, and then continue in a repeating pattern.

Intel Trusted Execution Technology Error

This computer has experienced a problem related to the Intel Trusted Execution Technology (TXT) resulting in a failed startup. The error occurs when three situations are true:

- The Intel Trusted Execution Technology has been enabled on the computer.
- Policies have been set to prevent startup if the BIOS measurement has changed.
- The BIOS measurement has changed.

For more information about Intel TXT, go to Intel Trusted Execution Technology .

You must use a service event to resolve this issue.

NOTE: The computer attempts to notify you of this problem through a series of blinking lights. When you attempt to turn on the computer from an Off or Hibernated state, lights associated with the caps lock and num lock keys both **blink six times**, followed by a pause, and then continue in a repeating pattern.

Sure Start unable to find valid BIOS Boot Block image

This computer has experienced a problem in locating a valid BIOS image, resulting in a failed startup. You must use a service event to identify the source of the error and take appropriate corrective action.

NOTE: The computer attempts to notify you of this problem through a series of blinking lights. When you attempt to turn on the computer from an Off or Hibernated state, lights associated with the caps lock and num lock keys both **blink seven times**, followed by a pause, and then continue in a repeating pattern.

Sure Start has identified a problem (Manual Recovery Policy Set)

This computer has experienced a problem in locating a valid BIOS image, resulting in a failed startup. HP Sure Start normally repairs this type of issue; however, on this computer HP Sure Start has been configured to operate in manual mode key sequence.

To proceed with the repair, press and hold the following keys: esc + up arrow + down arrow. To avoid the need for this manual recovery step, set the HP Sure Start recovery policy to automatic. If this error reoccurs, you must use a service event to identify the source of the error and take appropriate corrective action.

NOTE: The computer attempts to notify you of this problem through a series of blinking lights. When you attempt to turn on the computer from an Off or Hibernated state, lights associated with the caps lock and num lk keys both **blink eight times**, followed by a pause, and then continue in a repeating pattern.

POST error messages and user actions

Use this information to determine the meaning of POST error messages.

Table 7-55 POST error messages and user actions to address the error

Test description	Failure descriptions	Error code	Possible user actions
Product information	Invalid value	00A	Contact support for assistance.
Startup test	Memory module	200	Attempt to reseat the memory module and then repeat the test. Search http://www.hp.com/support for details about troubleshooting issues related to the memory module. If the memory module still fails, contact support.
Startup test	Hard Disk 1 SMART	301	Attempt to reseat the hard drive and repeat the test. The hard disk drive might have failed. Contact support for assistance.
Startup test	Hard Disk 2 SMART	302	The hard drive might have failed. Contact support for assistance.
Startup test	Hard Disk 1 Quick	303	The hard drive might have failed. Contact support for assistance.
Startup test	Hard Disk 2 Quick	304	The hard drive might have failed. Contact support for assistance.
Run-in test	Memory module	200	Attempt to reseat the memory module and then repeat the test. Search http://www.hp.com/support for details about troubleshooting issues related to the memory module. If the memory module still fails, contact support.
Run-in test	Hard Disk 1 SMART	301	Attempt to reseat the hard drive and repeat the test. The hard drive might have failed. Contact support for assistance.
Run-in test	Hard Disk 2 SMART	302	The hard drive might have failed. Contact support for assistance.
Run-in test	Hard Disk 1 Quick	303	The hard drive might have failed. Contact support for assistance.
Run-in test	Hard Disk 2 Quick	304	The hard drive might have failed. Contact support for assistance.
Hard Disk Test	Hard Disk 1 SMART	301	Attempt to reseat the hard drive and repeat the test. The hard drive might have failed. Contact support for assistance.
Hard Disk Test	Hard Disk 2 SMART	302	The hard drive might have failed. Contact support for assistance.
Hard Disk Test	Hard Disk 1 Quick	303	The hard drive might have failed. Contact support for assistance.
Hard Disk Test	Hard Disk 2 Quick	304	The hard drive might have failed. Contact support for assistance.
Hard Disk Test	Hard Disk 1 Full	305	The hard drive might have failed. Contact support for assistance.

Table 7-55 POST error messages and user actions to address the error (continued)

Test description	Failure descriptions	Error code	Possible user actions
Hard Disk Test	Hard Disk 2 Full	306	The hard drive might have failed. Contact support for assistance.
Boot Device Manager	Boot device not found	3F0	This code indicates a potential problem with the hard drive. Run the hard drive test.
Boot Device Manager	Hard Disk 1 Error	3F1	This code indicates a potential problem with the hard drive. Run the hard drive test.
Boot Device Manager	Hard Disk 2 Error	3F2	This code indicates a potential problem with the hard drive. Run the hard drive test.
Boot Device Manager	Hard Disk 1 SMART	301	This code indicates a potential problem with the hard drive. Run the hard drive test.
Boot Device Manager	Hard Disk 2 SMART	302	This code indicates a potential problem with the hard drive. Run the hard drive test.
BIOS Recovery	BIOS Recovery Occurred	500	This message indicates that BIOS recovery was completed successfully. No further action is required.
BIOS Application	BIOS Application Error	501	The BIOS installation might have become corrupted. Download the latest version of the BIOS and install it. See 4. Update BIOS and drivers on page 76 for more information. If reinstalling the BIOS fails, contact support for further assistance.
CMOS Recovery	CMOS Recovery Occurred	502	This message indicates that CMOS recovery was completed successfully. No further action is required.
Battery Check	Primary Battery Replace	601	This code indicates that the primary battery has very low capacity. Search http://www.hp.com/support for details about using the HP Support Assistant to verify the battery capacity and, if necessary, order a replacement.
Battery Check	Secondary Battery Replace	602	This code indicates that the secondary battery has very low capacity. Search http://www.hp.com/support for details about using the HP Support Assistant to verify the battery capacity and, if necessary, order a replacement.
Wireless Module	Not installed or responding	701	Reseat the wireless LAN adapter module, if your notebook supports it. Seating or reseating a wireless LAN adapter is unique to each computer model.
Fan	Fan not operating correctly	90B	The system fan might be malfunctioning. A hard reset can sometimes restore the system fan to working order. If the system fan continues to malfunction, contact support.

Routine maintenance for performance improvement

The table presents a summary of the suggested times for performing the routine maintenance tasks that are described in this document.

Table 7-56 Routine maintenance tasks to improve performance

Tasks	Weekly	Monthly	Occasionally
Perform a system tuneup.	X		

Table 7-56 Routine maintenance tasks to improve performance (continued)

Tasks	Weekly	Monthly	Occasionally
Run Windows Update.	X		
Scan for and remove viruses.	X		
Scan for and remove spyware and adware.	X		
Empty the Recycle Bin.	X		
Delete temporary internet files.	X		
Back up user files.		X	
Create a restore point.		X	
Defragment the hard drive.		X	
Run Scan Disk.		X	
Clean the exterior of the computer.			X
Close programs that are not being used.			X
Prevent programs from loading at startup.			X
Remove rear cover and clean fan blades and vents with compressed air.			X

Common blue screen error messages

The following sections define blue screen error messages.

Error message list

For an example of a bug check code reference, use this image.

For more information, see https://msdn.microsoft.com/en-us/library/windows/hardware/hh994433(v=vs.85).aspx.

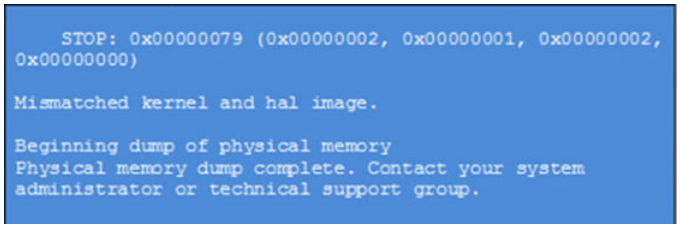

Note that the hexadecimal number following the word *STOP* is called the bug check code or Stop code.

Bug check symbolic names

Each bug check code also has an associated symbolic name.

In the example, the screen shows https://msdn.microsoft.com/en-us/library/windows/hardware/ff559209(v=vs.85).aspx

Microsoft general troubleshooting of Windows bug check codes

Use this information to troubleshoot Windows bug codes.

- If you recently added hardware to the system, try removing or replacing it. You can also check with the manufacturer to see if any patches are available.
- Try running HP PC Hardware Diagnostics UEFI.
- Check with the manufacturer to see if an updated system BIOS or firmware is available.
- Be sure that any expansion board is properly seated and all cables are completely connected.
- Confirm that any new hardware that is installed is compatible with the installed version of Windows.
- If new device drivers or system services have been added recently, try removing or updating them.

NOTE: Use safe mode when removing or disabling components. Safe mode loads only the minimum required drivers and system services during the Windows startup. To enter safe mode, restart your computer and press f8 at the menu that displays the operating system choices. At the resulting **Windows Advanced Options** menu, choose **Safe Mode**.

- Run a virus detection program. Viruses can infect all types of hard drives formatted for Windows, and resulting drive corruption can generate system bug check codes. Be sure that the virus detection program checks the Master Boot Record for infections.
- Verify that the system has the latest service pack installed.
- Disable BIOS memory options such as caching or shadowing.
- Check the System Log and Application Log in Event Viewer to see if any additional error messages have been logged recently. These might pinpoint the cause of the error.

Use Windows Debugging Tool

Debugging Tools for Windows are the primary tools used by Microsoft software developers to analyze and resolve errors that result in memory dumps.

Use the tool (https://msdn.microsoft.com/library/windows/hardware/ff551063%20(v=vs.85).aspx) to determine the cause of the error. Follow general steps for downloading, setting up, and using the Windows 10 debugging tool.

NOTE: The following screenshots provide only an example of the tool. Specifics shown are not representative of all applications of the debugging tool. This is a Microsoft tool supported by Microsoft.

Windows Software Development Kit (SDK)

Use these steps to download and use the Windows SDK.

1. Download the SDK from the following link:

   https://dev.windows.com/en-US/downloads/windows-10-sdk

2. Set up the SDK in the configuration window (Windows 10 shown).

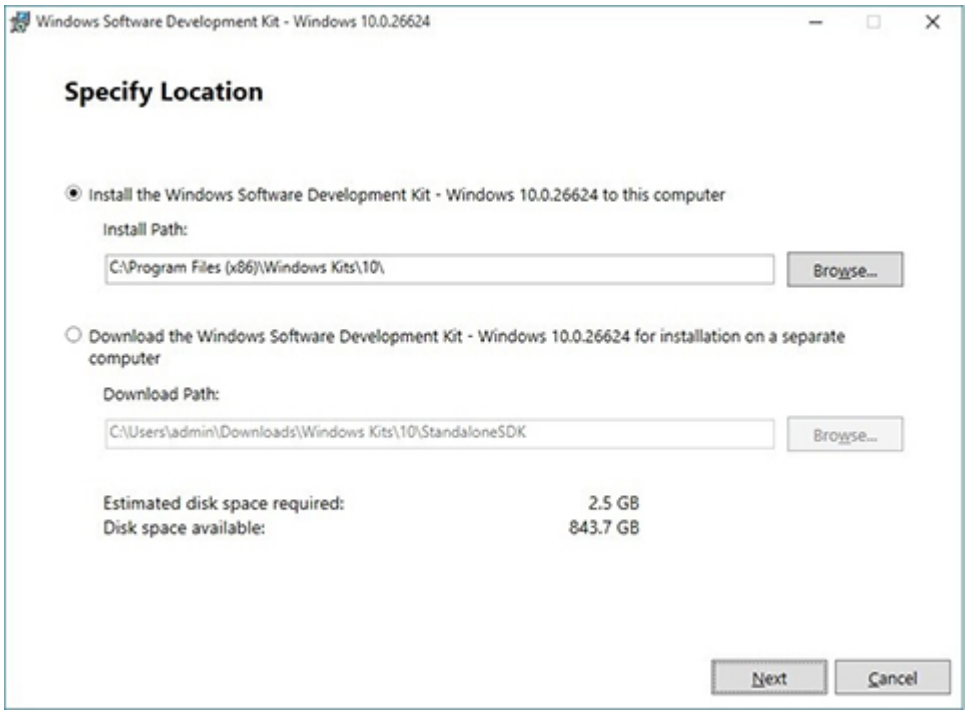

3. Select features to install.

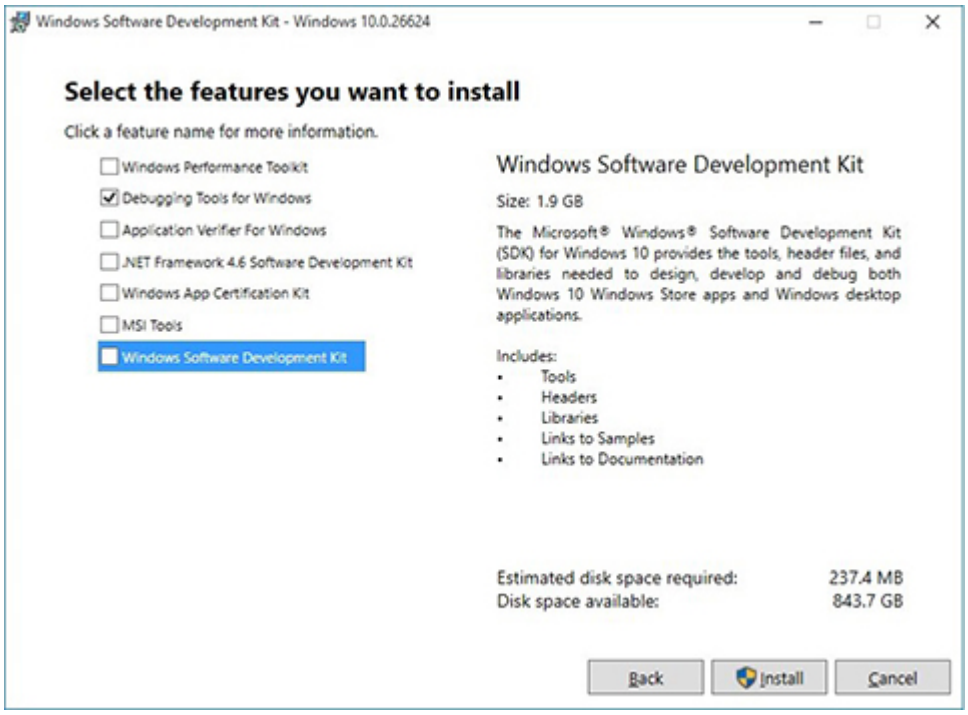

4. Run the SDK as an administrator.

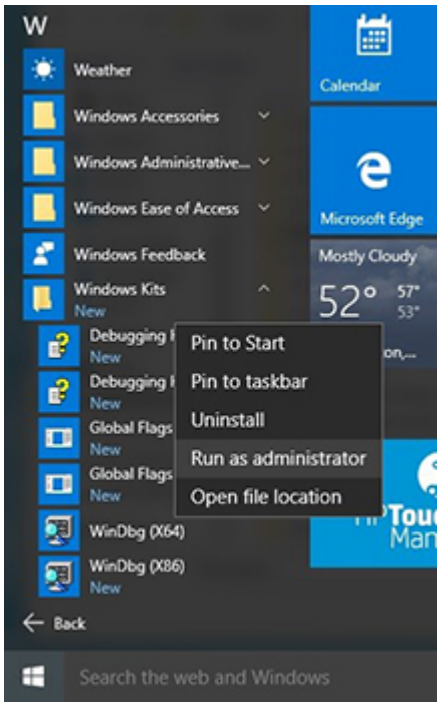

5. Set the symbol path. Select **File > Symbol File Path**.

   - In the **Symbol path** box, type `SRV*C:\Windows\symbol_cache*http://msdl.microsoft.com/download/symbols`.
   - Save the workspace.

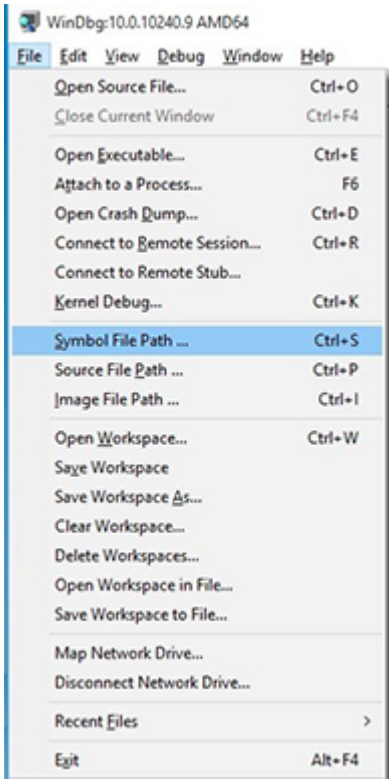

6. Open the crash dump file.

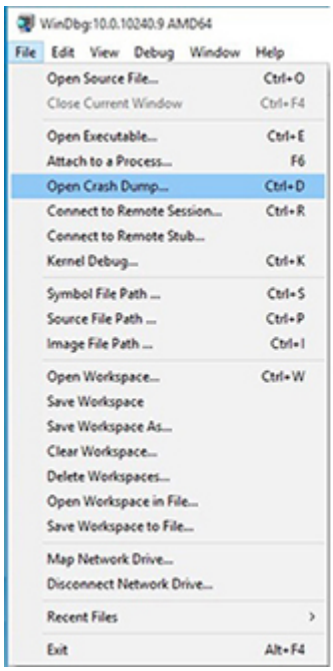

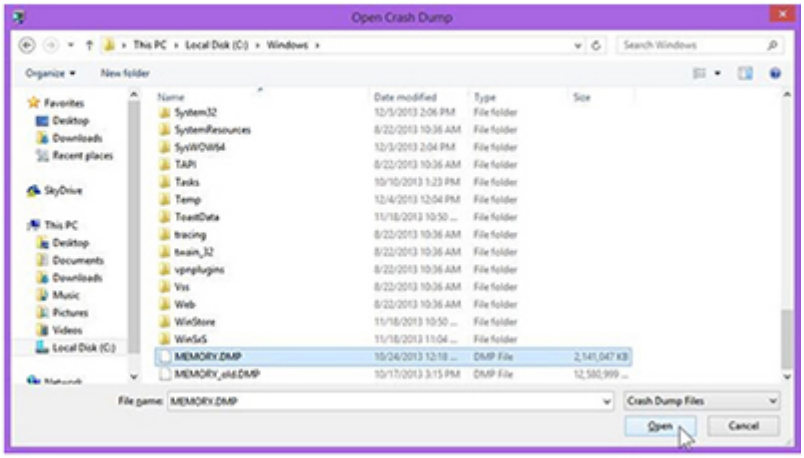

7. Analyze the file. In the following memory dump sample, look for Bug Check 0x3B. The ATIKMAG driver needs to be investigated for further root cause.

Lookup for Bug Check 0xC2.

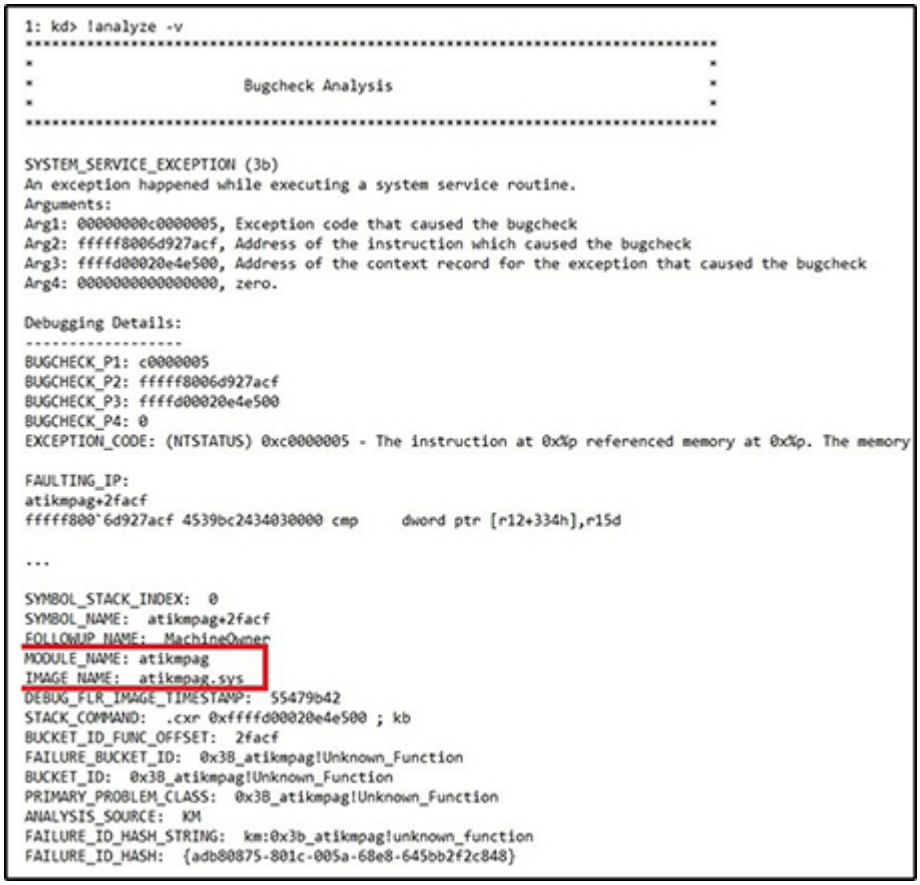

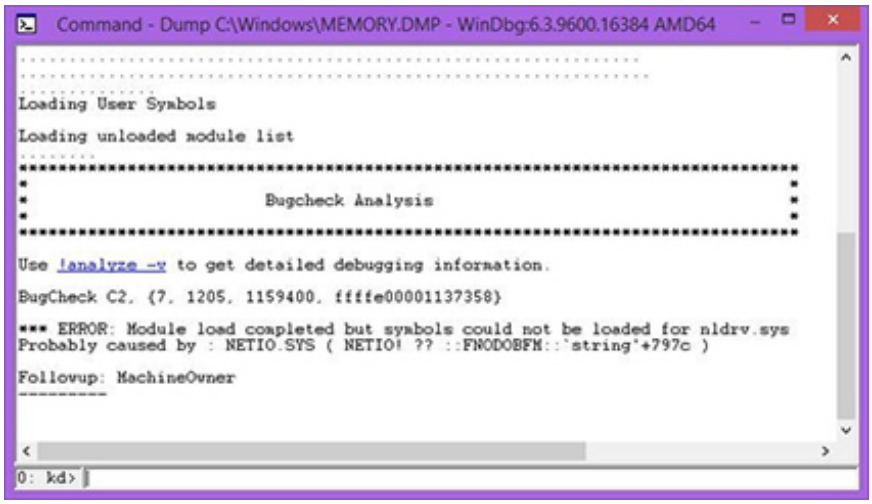

Display issue: pixel anomalies

All HP notebook displays adhere to strict quality and reliability specifications. A small percentage of display panels might have minor cosmetic manufacturing anomalies or irregularities such as bright or dark dots in the viewable area. These cosmetic imperfections are common to all display panel types, not specifically HP products.

All display panel defects should be examined at the highest possible resolution using both the brightest and darkest possible backgrounds, because some subpixel failures might not be readily visible under certain conditions.

- Type 1: Bright dot on a dark background = Always On
- Type 2: Dark dot on a bright background = Always Off
- Combination = in any combination and any color that are always on or off

Use the HP PC Hardware Diagnostics (UEFI) tool to determine numbers of pixels and their distance. HP uses the following set of criteria when damaged displays are submitted for warranty coverage.

Table 7-57 Electrical defect criteria

Panel resolution	Accept	Reject
Subpixel faults		
VGA, SVGA, SD, WSVGA, XGA, 720p, SD+, WXGA, HD	N ≤ 2 Type 1 N ≤ 2 Type 2	N ≥ 3 Type 1
WXGA+, SXGA+, HD+, SXGA+	N ≤ 3 Type 1 N ≤ 3 Type 2	N ≥ 4 Type 1
WSXGA+, UXGA, FHD, WUXGA	N ≤ 4 Type 1 N ≤ 4 Type 2	N ≥ 5 Type 1
QHD, QHD+, WQXGA, UD	N ≤ 5 Type 1 N ≤ 5 Type 2	N ≥ 6 Type 1
Electrical defect clusters (defects within a 5 × 5 pixel block)		
Minimum distance between ANY allowable defects (unless otherwise specified)	S ≥ 25 mm	S < 25 mm
Cluster with two or more subpixels with subpixel faults		Not allowed
Dim lines		Not allowed
Cross lines on/off		Not allowed
Horizontal lines on/off		Not allowed
Vertical lines on/off		Not allowed

NOTE: Examine all LCD panel defects at the highest possible resolution using both the brightest and darkest possible backgrounds, because some subpixel failures might not be readily visible under certain conditions.

NOTE: Contact support for assistance if issues are not listed.

Cable management

Proper routing of the internal cables is critical to the operation of the computer. Follow good cable management practices when you have to remove and install components.

- Handle cables with care to avoid damage.
- Apply only the tension required to seat or unseat cables during insertion or removal from the connector.
- When possible, handle cables by the connector or pull-strap.

- Route cables in such a way that they cannot be caught or snagged by parts being removed or replaced.
- Keep cables away from direct contact with major heat sources, such as the heat sink. Some air flow guides have a cable guide that lets you route cables safely around the heat sink.
- Do not jam cables on top of daughterboards or memory modules (DIMMs). Circuit cards and DIMMs are not designed to take excessive pressure.
- Keep cables clear of any movable or rotating parts (such as a fan) to prevent them from being cut or crimped when the component is lowered into its normal position.
- In all cases, avoid bending or twisting the cables. Do not bend any cable sharply. A sharp bend can break the internal wires.
- Do not rely on components like the keyboard or service door to push cables down internally. Always position the cables to lie properly by themselves or in the cable guides and chassis areas designed for cable routing.

IMPORTANT: Always release the connector latch before removing the cable. Otherwise, pulling the cable could damage the cable pins and result in a failed device.

Connector types

There are several types of connectors on the system board with different requirements for cable removal or insertion.

IMPORTANT: Do not touch connector pins or connector gold fingers directly with bare hands.

Flex cable

Use this information to properly use flex cables.

When connecting flex cables to a ZIF connector, rotate the latch to 90°, push the cable completely and evenly into the connector, and then close the latch.

When removing flex cables from a ZIF connector on the system board, you must release the latch before removing the cable. Always follow these steps:

1. Flip the connector latch 90° to release the cable.
2. Grasp the cable end of the connector and pull it straight out.

IMPORTANT: Always release the connector latch before removing the cable. Otherwise, pulling the cable could damage the cable pins and result in a failed device.

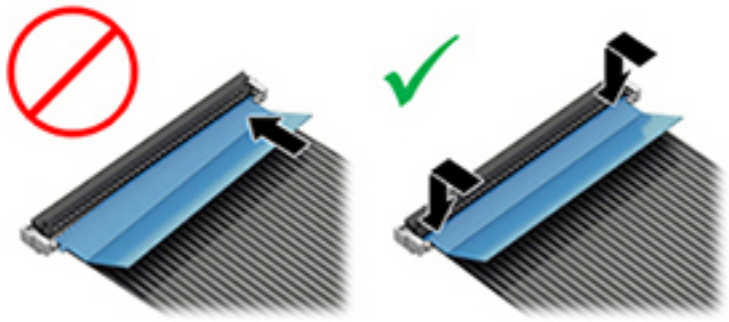

Horizontal cable insertion

Use a flat tool to pull the connector evenly. Do not pull on cable to remove.

Slide connector into receptacle on same horizontal plane as board and use a flat tool to push evenly into receptacle.

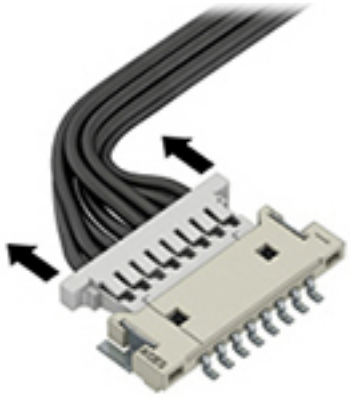

Multiple-pin horizontal connector (LVDS cable to display panel)

Use these procedures to properly insert and remove a multiple-pin horizontal connector.

To disconnect a cable:

1. Remove the tape **(1)** from the connector.
2. Release the locking bar **(2)** from the connector.
3. Pull in parallel with the PCB to disconnect the cable **(3)**.

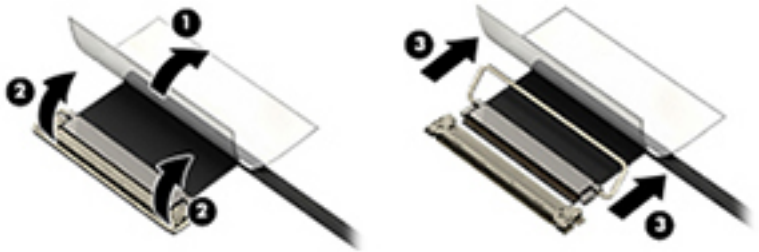

To connect a cable:

1. Slide the connector evenly into the receptacle on the same horizontal plane as the PCB connector.
2. Pull the locking bar to insert and push both sides of the connector horizontally to firmly lock the connector.
3. Tape down the locking bar and connector to secure it into place.

Multiple-pin vertical connector (LVDS cable to system board)

Use this procedure to properly insert and remove a multiple-pin vertical connector.

- Remove the connector gasket before removing the connector.

- If the connector has a plastic pull tab, pull the tab to disconnect. Otherwise, use a flat tool **(1)** under the connector to remove the connector **(2)** evenly. Do not pull on the cable to remove.
- Press evenly when reseating, reconnecting, or installing the connector.

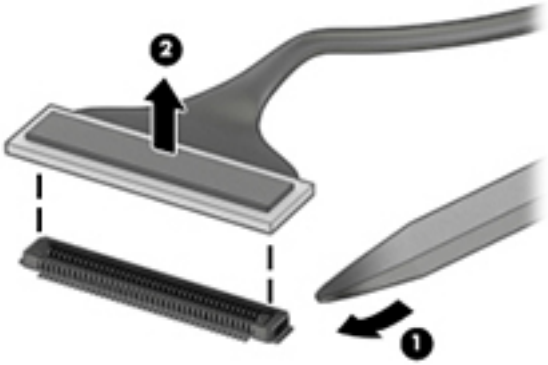

For more information about cable management, see Cable management on page 141.

8 Computer Setup (BIOS), TPM, and HP Sure Start

HP provides several tools to help set up and protect your computer.

Using Computer Setup

Computer Setup, or Basic Input/Output System (BIOS), controls communication between all the input and output devices on the system (such as hard drives, display, keyboard, mouse, and printer). Computer Setup includes settings for types of devices installed, the startup sequence of the computer, and amount of system and extended memory.

NOTE: Use extreme care when making changes in Computer Setup. Errors can prevent the computer from operating properly.

To start Computer Setup, turn on or restart the computer, and when the HP logo appears, press f10 to enter Computer Setup.

Navigating and selecting in Computer Setup

You can navigate and select in Computer Setup using one or more methods.

- To select a menu or a menu item, use the tab key and the keyboard arrow keys and then press enter, or use a pointing device to select the item.
- To scroll up and down, select the up arrow or the down arrow in the upper-right corner of the screen, or use the up arrow key or the down arrow key on the keyboard.
- To close open dialog boxes and return to the main Computer Setup screen, press esc, and then follow the on-screen instructions.

To exit Computer Setup, choose one of the following methods:

- To exit Computer Setup menus without saving your changes, select **Main**, select **Ignore Changes and Exit**, and then select **Yes**.

NOTE: If you are using arrow keys to highlight your choice, you must then press enter.

- To save your changes and exit Computer Setup menus, select **Main**, select **Save Changes and Exit**, and then select **Yes**.

NOTE: If you are using arrow keys to highlight your choice, you must then press enter.

Your changes go into effect when the computer restarts.

Restoring factory settings in Computer Setup

To return all settings in Computer Setup to the values that were set at the factory, follow these steps.

NOTE: Restoring defaults will not change the hard drive mode.

1. Start Computer Setup. See Using Computer Setup on page 145.
2. Select **Main**, select **Apply Factory Defaults and Exit**, and then select **Yes**.

NOTE: If you are using arrow keys to highlight your choice, you must then press enter.

NOTE: On select products, the selections might display **Restore Defaults** instead of **Apply Factory Defaults and Exit**.

Your changes go into effect when the computer restarts.

NOTE: Your password settings and security settings are not changed when you restore the factory settings.

Updating the BIOS

Updated versions of the BIOS might be available on the HP website. Most BIOS updates on the HP website are packaged in compressed files called *SoftPaqs*.

NOTE: On select products, when an update to the BIOS is performed using a Softpaq, HP CMSL or Windows Update, the installation process copies files to the EFI partition on the operating system storage device. The EFI partition must be ≥300 MB for this process to successfully complete. If not using the HP image from the factory, users need to create an EFI partition ≥300 MB when installing the operating system.

Some download packages contain a file named Readme.txt, which contains information regarding installing and troubleshooting the file.

Determining the BIOS version

To decide whether you need to update Computer Setup (BIOS), first determine the BIOS version on your computer.

If you are already in Windows, you can access BIOS version information (also known as *ROM date* and *System BIOS*) by pressing fn+esc (select products only). Or you can use Computer Setup.

1. Start Computer Setup. See Using Computer Setup on page 145.
2. Select **Main**, and then select **System Information**.
3. To exit Computer Setup menus without saving your changes, select **Main**, select **Ignore Changes and Exit**, and then select **Yes**.

NOTE: If you are using arrow keys to highlight your choice, you must then press enter.

To check for later BIOS versions, see Preparing for a BIOS update on page 146.

Preparing for a BIOS update

Be sure to follow all prerequisites before downloading and installing a BIOS update.

IMPORTANT: To reduce the risk of damage to the computer or an unsuccessful installation, download and install a BIOS update only when the computer is connected to the following types of reliable external power:

- The HP AC adapter provided with the computer (select products only)

- A replacement AC adapter provided by HP
- An AC adapter with the power rating specified on the product label

Do not download or install a BIOS update while the computer is operating under these circumstances:

- Running on battery power
- Docked in an optional docking device
- Connected to an optional docking power source

During the download and installation, follow these instructions:

- Do not disconnect power on the computer by unplugging the power cord from the AC outlet.
- Do not shut down the computer or initiate Sleep.
- Do not insert, remove, connect, or disconnect any device, cable, or cord.

Downloading a BIOS update

After you review the prerequisites, you can check for and download BIOS updates.

1. Perform one of these tasks:
   - Select the **Search** icon in the taskbar, type `support` in the search box, and then select the **HP Support Assistant** app.
   - Select the question mark icon (select products only) in the taskbar.
2. Select **Updates**, and then select **Check for updates and messages**.
3. Follow the on-screen instructions.
4. At the download area, follow these steps:
   a. Identify the most recent BIOS update and compare it to the BIOS version currently installed on your computer. Make a note of the date, name, or other identifier. You might need this information to locate the update later, after it has been downloaded to your hard drive.
   b. Follow the on-screen instructions to download your selection to the hard drive.

      Make a note of the path to the location on your hard drive where the BIOS update is downloaded. You will need to access this path when you are ready to install the update.

NOTE: If you connect your computer to a network, consult the network administrator before installing any software updates, especially system BIOS updates.

Installing a BIOS update

BIOS installation procedures vary. Follow any instructions that are displayed on the screen after the download is complete. If no instructions are displayed, follow these steps.

NOTE: On select products, when an update to the BIOS is performed using a Softpaq, HP CMSL or Windows Update, the installation process copies files to the EFI partition on the operating system storage device. The EFI partition must be ≥300 MB for this process to successfully complete. If not using the HP image from the factory, users need to create an EFI partition ≥300 MB when installing the operating system.

1. Select the **Search** icon in the taskbar, type `file` in the search box, and then select **File Explorer**.
2. Select your hard drive designation. The hard drive designation is typically Local Disk (C:).
3. Using the hard drive path you recorded earlier, open the folder that contains the update.
4. Double-click the file that has an .exe extension (for example, *filename*.exe).

   The BIOS installation begins.
5. Complete the installation by following the on-screen instructions.

NOTE: After a message on the screen reports a successful installation, you can delete the downloaded file from your hard drive.

Changing the boot order using the f9 prompt

To dynamically choose a boot device for the current startup sequence, follow these steps.

1. Access the Boot Device Options menu:
   - Turn on or restart the computer, and when the HP logo appears, press f9 to enter the Boot Device Options menu.
2. Select a boot device, press enter, and then follow the on-screen instructions.

TPM BIOS settings (select products only)

Trusted Platform Module (TPM) provides additional security for your computer. You can modify the TPM settings in Computer Setup (BIOS).

IMPORTANT: Before enabling TPM functionality on this system, you must ensure that your intended use of TPM complies with relevant local laws, regulations and policies, and approvals or licenses must be obtained if applicable. For any compliance issues arising from your operation or usage of TPM that violates the previously mentioned requirement, you shall bear all the liabilities wholly and solely. HP will not be responsible for any related liabilities.

NOTE: If you change the TPM setting to Hidden, TPM is not visible in the operating system.

To access TPM settings in Computer Setup:

1. Start Computer Setup. See Using Computer Setup on page 145.
2. Select **Security**, select **TPM Embedded Security**, and then follow the on-screen instructions.

Using HP Sure Start (select products only)

Select computer models are configured with HP Sure Start, a technology that monitors the computer's BIOS for attacks or corruption. If the BIOS becomes corrupted or is attacked, HP Sure Start automatically restores the BIOS to its previously safe state, without user intervention.

HP Sure Start is configured and already enabled so that most users can use the HP Sure Start default configuration. Advanced users can customize the default configuration.

To access the latest documentation on HP Sure Start, go to http://www.hp.com/support. Select **Find your product**, and then follow the on-screen instructions.

9 Using HP PC Hardware Diagnostics

You can use the HP PC Hardware Diagnostics utility to determine whether your computer hardware is running properly. The three versions are HP PC Hardware Diagnostics Windows, HP PC Hardware Diagnostics UEFI (Unified Extensible Firmware Interface), and (for select products only) Remote HP PC Hardware Diagnostics UEFI, a firmware feature.

Using HP PC Hardware Diagnostics Windows (select products only)

HP PC Hardware Diagnostics Windows is a Windows-based utility that allows you to run diagnostic tests to determine whether the computer hardware is functioning properly. The tool runs within the Windows operating system to diagnose hardware failures.

If HP PC Hardware Diagnostics Windows is not installed on your computer, you must download and install it. To download HP PC Hardware Diagnostics Windows, see Downloading HP PC Hardware Diagnostics Windows on page 150.

Using an HP PC Hardware Diagnostics Windows hardware failure ID code

When HP PC Hardware Diagnostics Windows detects a failure that requires hardware replacement, a 24-digit failure ID code is generated for select component tests. For interactive tests, such as keyboard, mouse, or audio and video palette, you must perform troubleshooting steps before you can receive a failure ID.

You have several options after you receive a failure ID:

- Select **Next** to open the Event Automation Service (EAS) page, where you can log the case.
- Scan the QR code with your mobile device, which takes you to the EAS page, where you can log the case.
- Select the box next to the 24-digit failure ID to copy your failure code and send it to support.

Accessing HP PC Hardware Diagnostics Windows

After HP PC Hardware Diagnostics Windows is installed, you can access it from HP Support Assistant or the Start menu.

Accessing HP PC Hardware Diagnostics Windows from HP Support Assistant (select products only)

After HP PC Hardware Diagnostics Windows is installed, follow these steps to access it from HP Support Assistant.

1. Complete one of the following tasks:
   - Select the **Search** icon in the taskbar, type `support` in the search box, and then select the **HP Support Assistant** app.
   - Select the question mark icon in the taskbar.

2. Select **Fixes & Diagnostics**.
3. Select **Run hardware diagnostics**, and then select **Launch**.
4. When the tool opens, select the type of diagnostic test that you want to run, and then follow the on-screen instructions.

NOTE: To stop a diagnostic test, select **Cancel**.

Accessing HP PC Hardware Diagnostics Windows from the Start menu (select products only)

After HP PC Hardware Diagnostics Windows is installed, follow these steps to access it from the Start menu.

1. Select the **Start** button, and then select **All apps**.
2. Select **HP PC Hardware Diagnostics Windows**.
3. When the tool opens, select the type of diagnostic test that you want to run, and then follow the on-screen instructions.

NOTE: To stop a diagnostic test, select **Cancel**.

Downloading HP PC Hardware Diagnostics Windows

The HP PC Hardware Diagnostics Windows downloading instructions are provided in English only. You must use a Windows computer to download this tool because only .exe files are provided.

Downloading the latest HP PC Hardware Diagnostics Windows version from HP

To download HP PC Hardware Diagnostics Windows from HP, follow these steps.

1. Go to http://www.hp.com/go/techcenter/pcdiags. The HP PC Diagnostics home page is displayed.
2. Select **Diagnose PC Hardware issues in Windows**, scroll down to the expanded window that appears, and then select **Download**.
3. A pop-up that asks what you want to do with the file opens. Select **Open** or **Save As**. The latest version of the diagnostics tool opens or downloads to the selected location.

Downloading the HP PC Hardware Diagnostics Windows from the Microsoft Store

You can download the HP PC Hardware Diagnostics Windows from the Microsoft Store.

1. Select the Microsoft Store app on your desktop or select the **Search** icon in the taskbar, and then type `Microsoft Store` in the search box.
2. Type `HP PC Hardware Diagnostics Windows` in the **Microsoft Store** search box.
3. Follow the on-screen directions.

The tool downloads to the selected location.

Downloading HP Hardware Diagnostics Windows by product name or number (select products only)

You can download HP PC Hardware Diagnostics Windows by product name or number.

NOTE: For some products, you might have to download the software to a USB flash drive by using the product name or number.

1. Go to http://www.hp.com/support.
2. Select **Software and Drivers**, select your type of product, and then enter the product name or number in the search box that is displayed.
3. In the **Diagnostics** section, select **Download**, and then follow the on-screen instructions to select the specific Windows diagnostics version to be downloaded to your computer or USB flash drive.

The tool downloads to the selected location.

Installing HP PC Hardware Diagnostics Windows

To install HP PC Hardware Diagnostics Windows, navigate to the folder on your computer or the USB flash drive where the .exe file downloaded, double-click the .exe file, and then follow the on-screen instructions.

Using HP PC Hardware Diagnostics UEFI

HP PC Hardware Diagnostics Unified Extensible Firmware Interface (UEFI) allows you to run diagnostic tests to determine whether the computer hardware is functioning properly. The tool runs outside the operating system so that it can isolate hardware failures from issues that are caused by the operating system or other software components.

NOTE: For some products, you must use a Windows computer and a USB flash drive to download and create the HP UEFI support environment because only .exe files are provided. For more information, see Downloading HP PC Hardware Diagnostics UEFI to a USB flash drive on page 152.

If your PC does not start in Windows, you can use HP PC Hardware Diagnostics UEFI to diagnose hardware issues.

Using an HP PC Hardware Diagnostics UEFI hardware failure ID code

When HP PC Hardware Diagnostics UEFI detects a failure that requires hardware replacement, a 24-digit failure ID code is generated.

For assistance in solving the problem, complete one of these tasks:

- Select **Contact HP**, accept the HP privacy disclaimer, and then use a mobile device to scan the failure ID code that appears on the next screen. The HP Customer Support - Service Center page appears with your failure ID and product number automatically filled in. Follow the on-screen instructions.
- Contact support, and provide the failure ID code.

Starting HP PC Hardware Diagnostics UEFI

To start HP PC Hardware Diagnostics UEFI, follow this procedure.

1. Turn on or restart the computer, and quickly press esc.

2. Press f2.

   The BIOS searches three places for the diagnostic tools, in the following order:

   a. Connected USB flash drive

   NOTE: To download the HP PC Hardware Diagnostics UEFI tool to a USB flash drive, see Downloading the latest HP PC Hardware Diagnostics UEFI version on page 153.

   b. Hard drive

   c. BIOS

3. When the diagnostic tool opens, select the type of diagnostic test that you want to run, and then follow the on-screen instructions.

Starting HP PC Hardware Diagnostics UEFI through HP Hotkey Support software (select products only)

This section describes how to start HP PC Hardware Diagnostics UEFI through HP Hotkey Support software.

NOTE: You must disable Fast Boot to access HP PC Hardware Diagnostics UEFI from the HP System Information application.

To disable Fast Boot:

1. Turn on or restart the computer, and when the HP logo appears, press f10 to enter Computer Setup.
2. Select **Advanced**, and then select **Boot Options**.
3. Clear **Fast Boot**.
4. Select **Save Changes and Exit**, and then select **Yes**.

To start HP PC Hardware Diagnostics UEFI through HP Hotkey Support software, follow this procedure:

1. From the **Start** menu, open the HP System Information Application or press fn+esc.
2. In the HP System Information screen, select **Run System Diagnostics**, select **Yes** to run the application, and then select **Restart**.

IMPORTANT: To prevent loss of data, save your work in all open apps before restarting your computer.

NOTE: When the restart is complete, the computer opens the HP PC Hardware Diagnostics UEFI Application. Proceed with the troubleshooting tests.

Downloading HP PC Hardware Diagnostics UEFI to a USB flash drive

Downloading HP PC Hardware Diagnostics UEFI to a USB flash drive can be useful in some situations.

- HP PC Hardware Diagnostics UEFI is not included in the preinstallation image.
- HP PC Hardware Diagnostics UEFI is not included in the HP Tool partition.

- The hard drive is damaged.

NOTE: The HP PC Hardware Diagnostics UEFI downloading instructions are provided in English only, and you must use a Windows computer to download and create the HP UEFI support environment because only `.exe` files are provided.

Downloading the latest HP PC Hardware Diagnostics UEFI version

To download the latest HP PC Hardware Diagnostics UEFI version to a USB flash drive, follow these steps.

1. Go to http://www.hp.com/go/techcenter/pcdiags. The HP PC Diagnostics home page is displayed.
2. Select **Diagnose PC Hardware Issues outside of the OS**, scroll down to the expanded window that appears, and then select **Download**.
3. A pop-up that asks what you want to do with the file opens. Select **Open** or **Save As**. The latest version of the diagnostics tool opens or downloads to the selected location.

Downloading HP PC Hardware Diagnostics UEFI by product name or number (select products only)

You can download HP PC Hardware Diagnostics UEFI by product name or number (select products only) to a USB flash drive.

NOTE: For some products, you might have to download the software to a USB flash drive by using the product name or number.

1. Go to http://www.hp.com/support.
2. Enter the product name or number, select your computer, and then select your operating system.
3. In the **Diagnostics** section, follow the on-screen instructions to select and download the specific UEFI Diagnostics version for your computer.

Using Remote HP PC Hardware Diagnostics UEFI settings (select products only)

Remote HP PC Hardware Diagnostics UEFI is a firmware (BIOS) feature that downloads HP PC Hardware Diagnostics UEFI to your computer. It can then run the diagnostics on your computer, and it might upload results to a preconfigured server.

For more information about Remote HP PC Hardware Diagnostics UEFI, go to http://www.hp.com/go/techcenter/pcdiags, select **Diagnose Other Potential Issues**, scroll down to **Remote PC Hardware Diagnostics UEFI**, and then select **Learn More**.

Downloading Remote HP PC Hardware Diagnostics UEFI

Remote HP PC Hardware Diagnostics UEFI is also available as a SoftPaq that you can download to a server.

Downloading the latest Remote HP PC Hardware Diagnostics UEFI version

You can download the latest Remote HP PC Hardware Diagnostics UEFI version to a USB flash drive.

1. Go to http://www.hp.com/go/techcenter/pcdiags. The HP PC Diagnostics home page is displayed.

2. Select **Diagnose PC Hardware Issues outside of the OS**, scroll down to the expanded window that appears, and then select **Download**.

3. A pop-up asks what you want to do with the file. Select **Open** or **Save As**. The latest version of the diagnostics tool opens or downloads to the selected location.

Downloading Remote HP PC Hardware Diagnostics UEFI by product name or number

You can download Remote HP PC Hardware Diagnostics UEFI by product name or number.

NOTE: For some products, you might have to download the software by using the product name or number.

1. Go to http://www.hp.com/support.

2. Select **Software and Drivers**, select your type of product, enter the product name or number in the search box that is displayed, select your computer, and then select your operating system.

3. In the **Diagnostics** section, follow the on-screen instructions to select and download the **Remote UEFI** version for the product.

Customizing Remote HP PC Hardware Diagnostics UEFI settings

Using the Remote HP PC Hardware Diagnostics setting in Computer Setup (BIOS), you can perform several customizations.

- Set a schedule for running diagnostics unattended. You can also start diagnostics immediately in interactive mode by selecting **Execute Remote HP PC Hardware Diagnostics UEFI**.
- Set the location for downloading the diagnostic tools. This feature provides access to the tools from the HP website or from a server that has been preconfigured for use. Your computer does not require the traditional local storage, such as a hard drive or USB flash drive, to run remote diagnostics.
- Set a location for storing the test results. You can also set the user name and password that you use for uploads.
- Display status information about the diagnostics run previously.

To customize Remote HP PC Hardware Diagnostics UEFI settings, follow these steps:

1. Turn on or restart the computer, and when the HP logo appears, press f10 to enter Computer Setup.

2. Select **Advanced**, and then select **Settings**.

3. Make your customization selections.

4. Select **Main**, then select **Save Changes and Exit** to save your settings.

Your changes take effect when the computer restarts.

10 Backing up, restoring, and recovering

You can use Windows tools or HP software to back up your information, create a restore point, reset your computer, create recovery media, or restore your computer to its factory state. Performing these standard procedures can return your computer to a working state faster.

IMPORTANT: If you are performing recovery procedures on a tablet, the tablet battery must be at least 70% charged before you start the recovery process.

IMPORTANT: For a tablet with a detachable keyboard, connect the tablet to the keyboard base before beginning any recovery process.

Backing up information and creating recovery media

These methods of creating recovery media and backups are available on select products only.

Using Windows tools for backing up

HP recommends that you back up your information immediately after initial setup. You can do this task either using Windows Backup locally with an external USB flash drive or using online tools.

NOTE: If computer storage is 32 GB or less, Microsoft System Restore is disabled by default.

Using the HP Cloud Recovery Download Tool to create a recovery USB flash drive (select products only)

You can use the HP Cloud Recovery Download Tool to create an HP Recovery bootable USB flash drive.

For details:

- Go to http://www.hp.com, search for HP Cloud Recovery, and then select the result that matches the type of computer that you have and follow the on-screen instructions.

NOTE: In select countries, if you cannot create the HP Recovery USB flash drive yourself, contact support. Go to http://www.hp.com/support, select your country or region, and then follow the on-screen instructions.

IMPORTANT: HP recommends that you follow the Restoring and recovery methods on page 156 to restore your computer before you obtain and use the HP USB flash drive. Using a recent backup can return your machine to a working state sooner than using the HP USB flash drive. After the system is restored, reinstalling all the operating system software released since your initial purchase can be a lengthy process.

Restoring and recovering your system

You have several tools available to recover your system both within and outside of Windows if the desktop cannot load.

HP recommends that you attempt to restore your system using the Restoring and recovery methods on page 156.

Creating a system restore

System Restore is available in Windows. The System Restore software can automatically or manually create restore points, or snapshots, of the system files and settings on the computer at a particular point.

When you use System Restore, it returns your computer to its state at the time you made the restore point. Your personal files and documents should not be affected.

Restoring and recovery methods

After you run the first method, test to see whether the issue still exists before you proceed to the next method, which might now be unnecessary.

1. Run a Microsoft System Restore.
2. Run Reset this PC.

NOTE: The options **Remove everything** and then **Fully clean the drive** can take several hours to complete and leave no information on your computer. It is the safest way to reset your computer before you recycle it.

3. Recover using the HP Recovery USB flash drive. For more information, see Recovering using the HP Recovery USB flash drive on page 156.

For more information about the first two methods, see the Get Help app:

- Select the **Start** button, select **All apps**, select the **Get Help** app, and then enter the task you want to perform.

NOTE: You must be connected to the internet to access the Get Help app.

Recovering using the HP Recovery USB flash drive

You can use the HP Recovery USB flash drive to recover the operating system and drivers that were installed at the factory. On select products, you can create recovery media on a bootable USB flash drive using the HP Cloud Recovery Download Tool.

For details, see Using the HP Cloud Recovery Download Tool to create a recovery USB flash drive (select products only) on page 155.

NOTE: In select countries, if you cannot create the HP Recovery USB flash drive yourself, contact support. Go to http://www.hp.com/support, select your country or region, and then follow the on-screen instructions.

To recover your system:

- Insert the HP Recovery USB flash drive, and then restart the computer.

NOTE: HP recommends that you follow the Restoring and recovery methods on page 156 to restore your computer before you obtain and use the HP USB flash drive. Using a recent backup can return your machine to a working state sooner than using the HP USB flash drive. After the system is restored, reinstalling all the operating system software released since your initial purchase can be a lengthy process.

Changing the computer boot order

If your computer does not restart using the HP Recovery USB flash drive, you can change the computer boot order, which is the order of devices listed in BIOS for startup information.

IMPORTANT: For a tablet with a detachable keyboard, connect the tablet to the keyboard base before beginning these steps.

To change the boot order:

1. Insert the HP Recovery USB flash drive.
2. Access the system **Startup** menu.
   - For computers or tablets with keyboards attached, turn on or restart the computer or tablet, quickly press esc, and then press f9 for boot options.
   - For tablets without keyboards, turn on or restart the tablet, and then quickly press and hold one of the following buttons:
     - Volume up
     - Volume down

     Then select **f9**.
3. Select the USB flash drive to boot from, and then follow the on-screen instructions.

Using HP Sure Recover (select products only)

Select computer models are configured with HP Sure Recover, a PC operating system (OS) recovery solution built into the hardware and software. HP Sure Recover can fully restore the HP OS image without installed recovery software.

Using HP Sure Recover, an administrator or user can restore the system and install:

- Latest version of the OS
- Platform-specific device drivers
- Software applications, in the case of a custom image

To access the latest documentation for HP Sure Recover, go to http://www.hp.com/support. Follow the on-screen instructions to find your product and locate your documentation.

11 Specifications

This chapter provides specifications for your computer system.

Computer specifications

This section provides specifications for your computer. When you travel with your computer, the computer dimensions and weights, as well as input power ratings and operating specifications, provide helpful information.

Table 11-1 Computer specifications

	Metric	U.S.
Dimensions		
Width	**356.0 mm**	14.01 in
Depth	**240.0 mm**	9.45 in
Height	**17.9 mm**	0.71 in
Weight	**1905 g**	4.2 lbs
Input power		
Operating voltage and current	5 V DC @ 3 A / 9 V DC @ 3 A / 12 V DC @ 5 A / 15 V DC @ 5 A / 20 V DC @ 5 A / 28 V DC @ 5 A – 140 W USB-C	
Temperature		
Operating	**5°C to 35°C**	41°F to 95°F
Nonoperating	**-20°C to 60°C**	-4°F to 140°F
Relative humidity (noncondensing)		
Operating	10% to 90%	
Nonoperating	5% to 95%	
Maximum altitude (unpressurized)		
Operating	**-15 m to 3,048 m**	-50 ft to 10,000 ft
Nonoperating	**-15 m to 12,192 m**	-50 ft to 40,000 ft

NOTE: Applicable product safety standards specify thermal limits for plastic surfaces. The device operates well within this range of temperatures.

Display specifications

This section provides specifications for your display.

Table 11-2 Display specifications

	Metric	U.S.
Active diagonal size	**40.64 cm**	16.0 in
Resolution	3840 × 2400 (WQUXGA)	
	2880 × 1800 (2.8 K)	
	2560 × 1600 (2.5 K)	
	1920 × 1200 (WUXGA)	
Surface treatment	BrightView	
	Antiglare	
Brightness	500 nits	
	400 nits	
Viewing angle	UWVA	
Backlight	OLED	
	LED	
	WLED	
Display panel interface	eDP	

12 Statement of memory volatility

For general information regarding nonvolatile memory in HP business computers, and to restore nonvolatile memory that can contain personal data after the system has been turned off and the hard drive has been removed, use these instructions.

HP business computer products that use Intel®-based or AMD®-based system boards contain volatile DDR memory. The amount of nonvolatile memory present in the system depends upon the system configuration. Intel-based and AMD-based system boards contain nonvolatile memory subcomponents as originally shipped from HP, with the following assumptions:

- No subsequent modifications were made to the system.
- No applications, features, or functionality were added to or installed on the system.

Following system shutdown and removal of all power sources from an HP business computer system, personal data can remain on volatile system memory (DIMMs) for a finite period of time and also remains in nonvolatile memory. Use the following steps to remove personal data from the computer, including the nonvolatile memory found in Intel-based and AMD-based system boards.

NOTE: If your tablet has a keyboard base, connect to the keyboard base before beginning steps in this chapter.

Current BIOS steps

Use these instructions to restore nonvolatile memory.

1. Follow these steps to restore the nonvolatile memory that can contain personal data. Restoring or reprogramming nonvolatile memory that does not store personal data is neither necessary nor recommended.

   a. Turn on or restart the computer, and then quickly press esc.

   NOTE: If the system has a BIOS administrator password, type the password at the prompt.

   b. Select **Main**, select **Apply Factory Defaults and Exit**, and then select **Yes** to load defaults. The computer restarts.

   c. During the restart, press esc while the "Press the ESC key for Startup Menu" message is displayed at the bottom of the screen.

   NOTE: If the system has a BIOS administrator password, type the password at the prompt.

   d. Select the **Security** menu, select **Restore Security Settings to Factory Defaults**, and then select **Yes** to restore security level defaults. The computer restarts.

   e. During the restart, press esc while the "Press the ESC key for Startup Menu" message is displayed at the bottom of the screen.

   NOTE: If the system has a BIOS administrator password, type the password at the prompt.

f. If an asset or ownership tag is set, select the **Security** menu and scroll down to the **Utilities** menu. Select **System IDs**, and then select **Asset Tracking Number**. Clear the tag, and then make the selection to return to the prior menu.

g. If a DriveLock password is set, select the **Security** menu, and scroll down to **Hard Drive Utilities** under the **Utilities** menu. Select **Hard Drive Utilities**, select **DriveLock**, and then clear the check box for **DriveLock password on restart**. Select **OK** to proceed.

h. Select the **Main** menu, and then select **Reset BIOS Security to factory default**. Select **Yes** at the warning message. The computer restarts.

i. During the restart, press esc while the "Press the ESC key for Startup Menu" message is displayed at the bottom of the screen.

NOTE: If the system has a BIOS administrator password, type the password at the prompt.

j. Select the **Main** menu, select **Apply Factory Defaults and Exit**, select **Yes** to save changes and exit, and then select **Shutdown**.

k. Restart the system. If the system has a TPM, fingerprint reader, or both, one or two prompts will appear—one to clear the TPM and the other to Reset Fingerprint Sensor. Press or tap f1 to accept or f2 to reject.

l. Remove all power and system batteries for at least 24 hours.

2. Complete one of the following tasks:

- Remove and retain the storage drive.
- Clear the drive contents by using a third-party utility designed to erase data from an SSD.
- Clear the contents of the drive by using the following BIOS Setup Secure Erase command option steps:

NOTE: If you clear data using Secure Erase, you cannot recover it.

a. Turn on or restart the computer, and then quickly press esc.

b. Select the **Security** menu and scroll down to the esc menu.

c. Select **Hard Drive Utilities**.

d. Finish by completing one of these tasks:

- Under **Utilities**, select **Secure Erase**, select the hard drive storing the data you want to clear, and then follow the on-screen instructions to continue.
- Clear the contents of the drive using the following Disk Sanitizer commands steps:

i. Turn on or restart the computer, and then quickly press esc.

ii. Select the **Security** menu and scroll down to the **Utilities** menu.

iii. Select **Hard Drive Utilities**.

iv. Under **Utilities**, select **Disk Sanitizer**, select the hard drive with the data that you want to clear, and then follow the on-screen instructions to continue.

NOTE: The amount of time it takes for Disk Sanitizer to run can be several hours. Plug the computer into an AC outlet before starting.

Nonvolatile memory usage

Use this table to troubleshoot nonvolatile memory usage.

Table 12-1 Troubleshooting information for nonvolatile memory usage

Description	Volatility description	Storage user data	How to erase
Primary storage device, holds the OS, applications, and application settings	Nonvolatile, 8-256 GB of eMMC or NVMe SSD storage, removable	Yes[1]	See Current BIOS steps on page 160 for information about erasing the primary storage device.
System memory (RAM), holds transient data during system operation	Volatile, SODIMM socket. Removable (4 GB/8 GB/16 GB)	Yes	Unplug unit from power.
Permanent system BIOS settings	Nonvolatile, 16 KB, stored	No[2]	See Current BIOS steps on page 160 for information about clearing BIOS settings.
System boot ROM (BIOS)	Nonvolatile, 128 Mbit (16 MB) socketed, removable	No	Download the latest BIOS for your model from the HP website and follow the instructions to flash the BIOS that are on the website.
RTC (CMOS) RAM	Volatile, 256 bytes located in AMD embedded System on Chip (SoC)	No	**Desktop computers with a CMOS button:** Unplug unit from main power, remove top cover and press the **Clear CMOS** button. **Notebook and desktop computers without a CMOS button:** 1. Press and hold power button for 12 seconds. 2. Press Windows key + V, and then press power button.
Keyboard/mouse (ROM)	Nonvolatile, 2 KB embedded in the super I/O controller (SIO2)	Yes	N/A
Keyboard/mouse (RAM)	Volatile, 256 bytes embedded in the super I/O controller (SIO2)	No	Unplug unit from main power.
LOM EEPROM	Nonvolatile, 2 MB embedded in LAN controller	No	N/A
TPM	Nonvolatile, 51 KB ROM for firmware and 38 KB system parametric data	No[3]	See Current BIOS steps on page 160 for information about clearing TPM.

[1] Under typical operation, the only user data stored on the primary storage device are preferences for device configuration and settings for connections. However, the administrator can configure the system to allow users to store data locally.

[2] The only user data potentially stored in BIOS Settings are the ownership and asset tags, administrator password, and startup password.

[3] The TPM might contain encrypted passwords or certificates generated from user or administrator input.

Questions and answers

Use this section to answer your questions about nonvolatile memory.

1. **How can the BIOS settings be restored (returned to factory settings)?**

IMPORTANT: The restore defaults feature does not securely erase any information on your hard drive. See question and answer 6 for steps to securely erase information.

The restore defaults feature does not reset the Custom Secure Boot keys. See question and answer 7 for information about resetting the keys.

   a. Turn on or restart the computer, and then quickly press esc.

   b. Select **Main**, and then select **Apply Factory Defaults and Exit**.

   c. Follow the on-screen instructions.

   d. Select **Main**, select **Save Changes and Exit**, and then follow the on-screen instructions.

2. **What is a UEFI BIOS?**

   The Unified Extensible Firmware Interface (UEFI) BIOS is an industry-standard software interface between the platform firmware and an operating system (OS). It replaces the older legacy BIOS architecture.

   The UEFI BIOS provides an interface to display the system information and configuration settings and to change the configuration of your computer before an OS is loaded. BIOS provides a secure runtime environment that supports a GUI. In this environment, you can use either a pointing device (touch screen, touchpad, pointing stick, or USB mouse) or the keyboard to navigate and make menu and configuration selections. The UEFI BIOS also contains basic system diagnostics.

   In addition, the UEFI BIOS works to initialize the computer's hardware before loading and executing the OS; the runtime environment allows the loading and execution of software programs from storage devices to provide more functionality, such as advanced hardware diagnostics (with the ability to display more detailed system information) and advanced firmware management and recovery software.

3. **Where is the UEFI BIOS located?**

   The UEFI BIOS is located on a flash memory chip. You must use a utility to write to the chip.

4. **What kind of configuration data is stored on the DIMM Serial Presence Detect (SPD) memory module? How would this data be written?**

The DIMM SPD memory contains information about the memory module, such as size, serial number, data width, speed and timing, voltage, and thermal information. This information is written by the module manufacturer and stored on an EEPROM. You cannot write to this EEPROM when the memory module is installed in a computer. Third-party tools do exist that can write to the EEPROM when the memory module is not installed in a computer. Various third-party tools are available to read SPD memory.

5. **What is meant by "Restore the nonvolatile memory found in Intel-based system boards"?**

   This message relates to clearing the Real Time Clock (RTC) CMOS memory that contains computer configuration data.

6. **How can the BIOS security be reset to factory defaults and erase the data?**

IMPORTANT: Resetting results in the loss of information.

These steps do not reset Custom Secure Boot Keys. See question and answer 7 for information about resetting the keys.

   a. Turn on or restart the computer, and then quickly press esc.

   b. Select **Main**, and then select **Reset Security to Factory Defaults**.

   c. Follow the on-screen instructions.

   d. Select **Main**, select **Save Changes and Exit**, and then follow the on-screen instructions.

7. **How can the Custom Secure Boot Keys be reset?**

   Secure Boot is a feature to ensure that only authenticated code can start on a platform. If you enabled Secure Boot and created Custom Secure Boot Keys, disabling Secure Boot does not clear the keys. You must also select to clear the Custom Secure Boot Keys. Use the same Secure Boot access procedure that you used to create the Custom Secure Boot Keys, but select to clear or delete all Secure Boot Keys.

   a. Turn on or restart the computer, and then quickly press esc.

   b. Select the **Security** menu, select **Secure Boot Configuration**, and then follow the on-screen instructions.

   c. At the **Secure Boot Configuration** window, select **Secure Boot**, select **Clear Secure Boot Keys**, and then follow the on-screen instructions to continue.

Using HP Sure Start (select products only)

Select computer models are configured with HP Sure Start, a technology that monitors the computer's BIOS for attacks or corruption. If the BIOS becomes corrupted or is attacked, HP Sure Start automatically restores the BIOS to its previously safe state, without user intervention.

HP Sure Start is configured and already enabled so that most users can use the HP Sure Start default configuration. Advanced users can customize the default configuration.

To access the latest documentation on HP Sure Start, go to http://www.hp.com/support. Select **Find your product**, and then follow the on-screen instructions.

13 Power cord set requirements

This chapter provides power cord requirements for countries and regions.

The wide-range input feature of the computer permits it to operate from any line voltage from 100 V AC to 120 V AC, or from 220 V AC to 240 V AC.

The 3-conductor power cord set included with the computer meets the requirements for use in the country or region where the equipment is purchased.

Power cord sets for use in other countries or regions must meet the requirements of the country and region where the computer is used.

Requirements for all countries

These power cord requirements are applicable to all countries and regions.

- The length of the power cord set must be at least **1.0 m** (3.3 ft) and no more than **2.0 m** (6.5 ft).
- All power cord sets must be approved by an acceptable accredited agency responsible for evaluation in the country or region where the power cord set will be used.
- The power cord sets must have a minimum current capacity of 10 A and a nominal voltage rating of 125 V AC or 250 V AC, as required by the power system of each country or region.
- The appliance coupler must meet the mechanical configuration of an EN 60 320/IEC 320 Standard Sheet C13 connector for mating with the appliance inlet on the back of the computer.

Requirements for specific countries and regions

To determine power cord requirements for specific countries and regions, use this table.

Table 13-1 Power cord requirements for specific countries and regions

Country/region	Accredited agency	Applicable note number
Argentina	IRAM	1
Australia	SAA	1
Austria	OVE	1
Belgium	CEBEC	1
Brazil	ABNT	1
Canada	CSA	2
Chile	IMQ	1
Denmark	DEMKO	1
Finland	FIMKO	1
France	UTE	1
Germany	VDE	1

Table 13-1 Power cord requirements for specific countries and regions (continued)

Country/region	Accredited agency	Applicable note number
India	BIS	1
Israel	SII	1
Italy	IMQ	1
Japan	JIS	3
Netherlands	KEMA	1
New Zealand	SANZ	1
Norway	NEMKO	1
The People's Republic of China	CCC	4
Saudi Arabia	SASO	7
Singapore	PSB	1
South Africa	SABS	1
South Korea	KTL	5
Sweden	SEMKO	1
Switzerland	SEV	1
Taiwan	BSMI	6
Thailand	TISI	1
United Kingdom	ASTA	1
United States	UL	2

1. The flexible cord must be Type HO5VV-F, 3-conductor, 0.75 mm² conductor size. Power cord set fittings (appliance coupler and wall plug) must bear the certification mark of the agency responsible for evaluation in the country or region where it will be used.
2. The flexible cord must be Type SVT/SJT or equivalent, No. 18 AWG, 3-conductor. The wall plug must be a 2-pole grounding type with a NEMA 5-15P (15 A, 125 V AC) or NEMA 6-15P (15 A, 250 V AC) configuration. CSA or C-UL mark. UL file number must be on each element.
3. The appliance coupler, flexible cord, and wall plug must bear a T mark and registration number in accordance with the Japanese Dentori Law. The flexible cord must be Type VCTF, 3-conductor, 0.75 mm² or 1.25 mm² conductor size. The wall plug must be a 2-pole grounding type with a Japanese Industrial Standard C8303 (7 A, 125 V AC) configuration.
4. The flexible cord must be Type RVV, 3-conductor, 0.75 mm² conductor size. Power cord set fittings (appliance coupler and wall plug) must bear the CCC certification mark.
5. The flexible cord must be Type H05VV-F 3-conductor, 0.75 mm² conductor size. KTL logo and individual approval number must be on each element. Approval number and logo must be printed on a flag label.
6. The flexible cord must be Type HVCTF 3-conductor, 1.25 mm² conductor size. Power cord set fittings (appliance coupler, cable, and wall plug) must bear the BSMI certification mark.

7. For 127 V AC, the flexible cord must be Type SVT or SJT 3-conductor, 18 AWG, with plug NEMA 5-15P (15 A, 125 V AC), with UL and CSA or C-UL marks. For 240 V AC, the flexible cord must be Type H05VV-F 3-conductor, 0.75 mm² or 1.00 mm² conductor size, with plug BS 1363/A with BSI or ASTA marks.

14 Swelling or deformation of notebook battery

To protect your hardware from potential damage, HP recommends that if you are experiencing battery swelling, stop using the notebook until you can replace the battery.

You can contact HP to understand what battery replacement options are available. To learn more about lithium-ion batteries and the factors that can accelerate battery swelling, see https://support.hp.com/us-en/document/ish_6824662-6824706-16.

Swollen notebook batteries

You might notice that your notebook battery has become somewhat deformed or swollen over time. In some cases, the battery swelling might be significant enough to impact other components of the system including the touchpad, keyboard, and chassis.

Swollen battery is not a safety issue

A swollen battery does not present a safety issue. It is the result of the generation of gases per the normal degradation of the battery cell over time.

HP has worked closely with our battery cell suppliers and third-party industry experts to help minimize the potential for HP batteries to swell over time and to identify that swollen batteries are not a safety issue.

Discontinue using a swollen battery

To protect your hardware from potential damage, HP recommends that, if you are experiencing battery swelling, you stop using the notebook until the battery can be replaced.

You can contact https://www.hp.com/go/contacthp to understand what battery replacement options are available.

Replace a swollen battery

If a battery is under warranty, HP will replace the battery per the terms and conditions of the HP Worldwide Limited Warranty or applicable HP Care Packs.

For batteries no longer under warranty, contact HP to purchase a genuine HP replacement battery.

Minimize battery swelling

Multiple factors can accelerate battery swelling.

To help mitigate battery swelling over time, you can use either HP Adaptive Battery Optimizer (consumer notebooks) or HP Battery Health Manager (commercial notebooks) settings to improve battery longevity and performance for various use scenarios.

Adaptive Battery Optimizer (consumer notebooks)

Adaptive Battery Optimizer technology can help mitigate the factors that cause the battery to swell. It is available on select HP OMEN, HP Spectre, HP Pavilion, and HP ENVY notebook computers.

Adaptive Battery Optimizer has been available on select gaming notebooks since 2019 and select consumer notebooks since 2020. To learn more about enabling Adaptive Battery Optimizer on your HP notebook, see https://support.hp.com/us-en/document/ish_9908083-9908127-16.

HP Battery Health Manager (commercial notebooks)

HP Battery Health Manager provides an easy-to-manage solution to help mitigate factors that cause the battery to swell. It is available on select HP ProBook and HP EliteBook notebook computers.

HP Battery Health Manager is available on select commercial notebooks manufactured since 2016. To learn more about HP Battery Health Manager, see https://support.hp.com/us-en/document/ish_4449597-3519507-16.

15 Recycling

When a nonrechargeable or rechargeable battery has reached the end of its useful life, do not dispose of the battery in general household waste. Follow the local laws and regulations in your area for battery disposal.

HP encourages customers to recycle used electronic hardware, HP original print cartridges, and rechargeable batteries. For more information about recycling programs, see the HP website at http://www.hp.com/recycle.

Index

A

AC adapters, spare part numbers 20
action keys, identifying 13
audio-out (headphone)/audio-in (microphone) combo jack, identifying 6
audio, product description 2

B

backup, creating 155
backups 155
battery
  illustrated 19
  spare part number 19
battery light 4, 6
battery swelling 168
BIOS
  determining version 146
  downloading an update 147
  preparing for an update 146
  updating 146
Bluetooth label 14
boot order
  changing using the f9 prompt 148
boot order, changing 157
bottom cover
  illustrated 19
  removal 41
  spare part number 19, 41
buttons
  left touchpad 9
  power 12
  right touchpad 9

C

camera 8
  identifying 8
camera light, identifying 7
camera privacy cover, identifying 8
caps lock light, identifying 10
caring for your computer 28
cautions
  electrostatic discharge 24, 25
cleaning your computer 28
  caring for wood veneer 30
  disinfecting 29
  HP Easy Clean 28
  removing dirt and debris 28
components
  bottom 13
  display 7
  keyboard area 8
  left side 5
  rear 14
  right side 4
computer major components 17
Computer Setup
  navigating and selecting 145
  restoring factory settings 145
  starting 145
computer specifications 158
connector, power 5, 6

D

display
  specifications 158
display components 7
display panel
  product description 1

E

electrostatic discharge (ESD) 24, 25
  preventing damage 24-26
esc key, identifying 12

F

fan
  spare part number 19
fans
  removal 55
  spare part number 55
fingerprint reader, identifying 11
fn key, identifying 13
fn lock light, identifying 10

G

grounding methods 24-26
guidelines
  packaging 24, 30
  transporting 24, 30
  workstation 24

H

hard drive
  product description 1
  specifications 158
HDMI port, identifying 5
heat sink
  removal 56
  spare part number 19, 56
HP PC Hardware Diagnostics UEFI
  downloading 152
  failure ID code 151
  HP Hotkey Support software 152
  starting 151, 152
  using 151
HP PC Hardware Diagnostics Windows
  accessing 149, 150
  downloading 150
  failure ID code 149
  installing 151
  using 149
HP Recovery media recovery 156
HP Sure Recover 157
HP Sure Start 160

I

illustrated parts catalog 17
internal microphones, identifying 7

J

jacks
  audio-out (headphone)/audio-in (microphone) combo 6

K

keyboard
  product description 2
  removal 32
  spare part numbers 32
keyboard country codes 32
keys
  action 13

esc 12
fn 13
Windows 13
Windows application 13
Windows Colpilot 13

L

labels
Bluetooth 14
regulatory 14
serial number 14
service 14
wireless certification 14
WLAN 14
left side components 5
lights
AC adapter and battery 4, 6
battery 4, 6
camera 7
caps lock 10
fn lock 10
microphone mute 10
power 10
lights, mute 10
low blue light mode 7

M

memory
nonvolatile 160
volatile 160
memory card reader, identifying 4
memory module
product description 1
microphone
product description 2
microphone mute light, identifying 10
microSD memory card reader, identifying 4
mute light, identifying 10

N

nano SIM card slot, identifying 7
nonvolatile memory 160

O

operating system, product description 3

P

packaging guidelines 24, 30
pointing device, product description 2
ports
HDMI 5
product description 2
USB SuperSpeed 5
USB Type-C power connector and Thunderbolt port with HP Sleep and Charge 5, 6
USB Type-C SuperSpeed 6
power button, identifying 12
power button/fingerprint reader assembly
removal 65
spare part number 19, 65
power connector
identifying USB Type-C 5, 6
power cord
requirements for all countries 165
requirements for specific countries and regions 165
set requirements 165
spare part numbers 22
power cords, spare part numbers 20
power lights 10
power requirements, product description 2
primary storage
product description 1
processor
product description 1
product description
audio 2
display panel 1
hard drive 1
keyboard 2
memory module 1
microphone 2
operating system 3
pointing device 2
ports 2
power requirements 2
primary storage 1
processors 1
security 3
serviceability 3
solid-state drive 1
video 2
wireless 2
product name and number, computer 14

R

recovery 155
discs 156
media 156
USB flash drive 156
recovery media 155
creating using HP Cloud Recovery Download Tool 155
creating using Windows tools 155
regulatory information
regulatory label 14
wireless certification labels 14
Remote HP PC Hardware Diagnostics UEFI settings
customizing 154
using 153
removal and replacement
procedures 32, 53
solid-state drive 50
removing personal data from volatile system memory 160
restoring 155
restoring and recovery methods 156
right side components 4

S

Screw Kit, spare part number 20
SD card board
removal 64
spare part number 19, 64
security cable slot, identifying 5
security, product description 3
serial number, computer 14
service labels, locating 14
serviceability, product description 3
setup utility
navigating and selecting 145
restoring factory settings 145
SIM board
removal 63
spare part number 19, 63
slots
nano SIM card 7
security cable 5
solid-state drive
illustrated 19
product description 1
removal and replacement 50
spare part number 19

speaker
illustrated 19
removal 62
spare part number 19
spare part numbers 62
speakers, identifying 4, 7, 11
special keys, using 12
specifications
computer 158
display 158
hard drive 158
static electricity 24, 25
support information 30
Sure Start
using 148, 164
swelling or deformation of
notebook battery 168
system board
illustrated 18
removal 58
spare part number 18
spare part numbers 58
system memory, removing personal
data from volatile 160
system restore 156
system restore point,
creating 155

T

top cover
spare part numbers 70
top cover with keyboard
illustrated 18
spare part number 18
touchpad
illustrated 18
removal 66
settings 8, 9
spare part number 18
spare part numbers 66
touchpad buttons
identifying 9
touchpad zone, identifying 9
TPM settings 148
transporting guidelines 24, 30
traveling with the computer 14

U

USB port, identifying 5
USB Type-C port, identifying 6
USB Type-C power connector and
Thunderbolt port with HP Sleep
and Charge, identifying 5, 6

V

vents, identifying 14
video, product description 2

W

Windows
backup 155
recovery media 155
system restore point 155
Windows application key,
identifying 13
Windows Copilot key,
identifying 13
Windows key, identifying 13
Windows tools, using 155
wireless antennas, identifying 7, 8
wireless certification label 14
wireless, product description 2
WLAN antennas, identifying 7
WLAN device 14
WLAN label 14
workstation guidelines 24
WWAN antennas
removal 67
WWAN antennas, identifying 8
WWAN board
removal 55
spare part number 20, 55
WWAN module
removal 53
spare part numbers 53