Maintenance and Service Guide

HP OmniBook X 14 inch Laptop Next Gen AI PC

Model number 14-ks0xxx

SUMMARY

This guide provides maintenance information about such topics as spare parts, removal and replacement of parts, security, and backing up.

Legal information

© Copyright 2026 HP Development Company, L.P.

Bluetooth is a trademark owned by its proprietor and used by HP Inc. under license. Microsoft and Windows are either registered trademarks or trademarks of Microsoft Corporation in the United States and/or other countries. NVIDIA, is a trademark or registered trademark of NVIDIA Corporation in the U.S. and other countries. Qualcomm is a trademark of Qualcomm Incorporated, registered in the United States and other countries, used with permission. USB Type-C, USB-C and the 10 Gbps and 40 Gbps port logos are registered trademarks of USB Implementers Forum. Miracast and Wi-Fi are registered trademarks of Wi-Fi Alliance.

The information contained herein is subject to change without notice. The only warranties for HP products and services are set forth in the express warranty statements accompanying such products and services. Nothing herein should be construed as constituting an additional warranty. HP shall not be liable for technical or editorial errors or omissions contained herein.

First Edition: October 2026

Document Part Number: Q15112-001

Product notice

This guide describes features that are common to most models. Some features may not be available on your computer.

Not all features are available in all editions or versions of Windows. Systems may require upgraded and/or separately purchased hardware, drivers, software or BIOS update to take full advantage of Windows functionality. Windows is automatically updated, which is always enabled. High-speed internet and Microsoft account required. ISP fees may apply and additional requirements may apply over time for updates. See http://www.microsoft.com. **If your product ships with Windows in S Mode:** Windows in S Mode works exclusively with apps from the Microsoft Store within Windows. Certain default settings, features, and apps cannot be changed. Some accessories and apps that are compatible with Windows may not work (including some antivirus, PDF writers, driver utilities, and accessibility apps), and performance may vary, even if you switch out of S Mode. If you switch to Windows, you cannot switch back to S Mode. Learn more at Windows.com/SmodeFAQ.

To access the latest user guides, go to http://www.hp.com/support, and follow the instructions to find your product. Then select **Setup & User Guides**.

Software terms

By installing, copying, downloading, or otherwise using any software product preinstalled on this computer, you agree to be bound by the terms of the HP End User License Agreement (EULA). If you do not accept these license terms, your sole remedy is to return the entire unused product (hardware and software) within 14 days for a full refund subject to the refund policy of your seller.

For any further information or to request a full refund of the price of the computer, please contact your seller.

Safety warning notice

Reduce the possibility of heat-related injuries or of overheating the computer by following the practices described.

⚠ **WARNING!** To reduce the possibility of heat-related injuries or of overheating the mobile computer, do not place the mobile computer directly on your lap or obstruct the computer air vents. Use the mobile computer only on a hard, flat surface. Do not allow another hard surface, such as an adjoining optional printer; or a soft surface, such as pillows, rugs, or clothing, to block airflow. Also, do not allow the AC adapter to contact the skin or a soft surface, such as pillows, rugs or clothing, during operation. The computer and AC adapter provided by HP comply with the user-accessible surface temperature limits defined by applicable safety standards.

Important notice about Customer Self-Repair parts

Your computer includes Customer Self-Repair parts and parts that should be accessed only by an authorized service provider.

IMPORTANT: See Removal and replacement procedures for Customer Self-Repair parts on page 28 for details.

Accessing parts described in Removal and replacement procedures for authorized service provider parts on page 38 can damage the computer or void your warranty.

Table of contents

1 Product description 1

2 Getting to know your computer 4

Right side 4

Left side 4

Display 5

Low blue light mode (select products only) 5

Wake-on-voice (select products only) 5

Keyboard area 7

Touchpad settings and components 7

Touchpad settings 7

Adjusting touchpad settings 7

Turning on the touchpad 7

Touchpad components 8

Lights 8

Special keys 10

Action keys 11

Rear 12

Bottom 13

Labels 13

3 Illustrated parts catalog 15

Computer major components 15

Display assembly subcomponents 17

Miscellaneous parts 19

4 Removal and replacement procedures preliminary requirements 20

Tools required 20

Service considerations 20

Plastic parts 20

Cables and connectors 20

Drive handling 20

Electrostatic discharge information 21

Generating static electricity 21

Preventing electrostatic damage to equipment 22

Personal grounding methods and equipment 22

Grounding the work area 23

Recommended materials and equipment 23

Cleaning your computer 24

Enabling HP Easy Clean (select products only) 24

Removing dirt and debris from your computer 24
Cleaning your computer with a disinfectant 25
Caring for wood veneer (select products only) 26
Packaging and transporting guidelines 26
Accessing support information 26
5 Removal and replacement procedures for Customer Self-Repair parts 28
Component replacement procedures 28
Preparation for disassembly 28
Bottom cover 28
Battery 31
Installing a new battery 31
Removing and reinstalling the same battery 35
Solid-state drive 36
6 Removal and replacement procedures for authorized service provider parts 38
Component replacement procedures 38
WLAN module 38
Heat sink 39
Fans 41
Speakers 42
USB board 43
Infrared sensor board 44
Touchpad 45
System board 46
Display assembly 49
Keyboard with top cover 55
7 Using Setup Utility (BIOS) 56
Starting Setup Utility (BIOS) 56
Updating Setup Utility (BIOS) 56
Determining the BIOS version 56
Preparing for a BIOS update 57
Downloading a BIOS update 57
Installing a BIOS update 58
8 Computer Setup (BIOS), TPM, and HP Sure Start 59
Using Computer Setup 59
Navigating and selecting in Computer Setup 59
Restoring factory settings in Computer Setup 59
Updating the BIOS 60
Determining the BIOS version 60
Preparing for a BIOS update 60
Downloading a BIOS update 61
Installing a BIOS update 61
Changing the boot order using the f9 prompt 62
TPM BIOS settings (select products only) 62
Using HP Sure Start (select products only) 62

9 Backing up, restoring, and recovering 63

Backing up information and creating recovery media 63
Using Windows tools for backing up 63
Using the HP Cloud Recovery Download Tool to create a recovery USB flash drive (select products only) 63

Restoring and recovering your system 63
Creating a system restore 64
Restoring and recovery methods 64
Recovering using the HP Recovery USB flash drive 64
Changing the computer boot order 65
Using HP Sure Recover (select products only) 65

10 Using HP PC Hardware Diagnostics 66

Using HP PC Hardware Diagnostics Windows (select products only) 66
Using an HP PC Hardware Diagnostics Windows hardware failure ID code 66
Accessing HP PC Hardware Diagnostics Windows 66
Accessing HP PC Hardware Diagnostics Windows from HP Support Assistant (select products only) 66
Accessing HP PC Hardware Diagnostics Windows from the Start menu (select products only) 67
Downloading HP PC Hardware Diagnostics Windows 67
Downloading the latest HP PC Hardware Diagnostics Windows version from HP 67
Downloading the HP PC Hardware Diagnostics Windows from the Microsoft Store 67
Downloading HP Hardware Diagnostics Windows by product name or number (select products only) 68
Installing HP PC Hardware Diagnostics Windows 68

Using HP PC Hardware Diagnostics UEFI 68
Using an HP PC Hardware Diagnostics UEFI hardware failure ID code 68
Starting HP PC Hardware Diagnostics UEFI 68
Starting HP PC Hardware Diagnostics UEFI through HP Hotkey Support software (select products only) 69
Downloading HP PC Hardware Diagnostics UEFI to a USB flash drive 69
Downloading the latest HP PC Hardware Diagnostics UEFI version 70
Downloading HP PC Hardware Diagnostics UEFI by product name or number (select products only) 70

Using Remote HP PC Hardware Diagnostics UEFI settings (select products only) 70
Downloading Remote HP PC Hardware Diagnostics UEFI 70
Downloading the latest Remote HP PC Hardware Diagnostics UEFI version 70
Downloading Remote HP PC Hardware Diagnostics UEFI by product name or number 71
Customizing Remote HP PC Hardware Diagnostics UEFI settings 71

11 Specifications 72

Computer specifications 72
Display specifications 73
Hard drive specifications 73
Solid-state drive specifications 74

12 Statement of memory volatility 75

Current BIOS steps 75

Nonvolatile memory usage 77
Questions and answers 78
Using HP Sure Start (select products only) 79
13 Power cord set requirements 80
Requirements for all countries 80
Requirements for specific countries and regions 80
14 Swelling or deformation of notebook battery 83
Swollen notebook batteries 83
Swollen battery is not a safety issue 83
Discontinue using a swollen battery 83
Replace a swollen battery 83
Minimize battery swelling 83
Adaptive Battery Optimizer (consumer notebooks) 84
HP Battery Health Manager (commercial notebooks) 84
15 Recycling 85
Index 86

1 Product description

This table provides detailed product information.

NOTE: For the latest specifications related to your computer, go to http://www.hp.com/support and follow the instructions to find your product. Select **Specifications & Accessories**, select **Product information**, and then select the specifications link.

Table 1-1 Product components and their descriptions

Category	Description
Product Name	HP OmniBook X 14 inch Laptop Next Gen AI PC
	Model number: 14-ks0xxx
	CTO model number: 14-ks000
Processors	**Qualcomm® Snapdragon X processors**
	Snapdragon X Elite processor
	Snapdragon X Plus processor
Graphics	**Internal graphics**
	NVIDIA® N1X Chipset
	Unified memory architecture (UMA)
	Supports HD Decode, DX12, and HDMI
Display	**14-inch BrightView Ultrawide Viewing Angle (UWVA) OLED, 2.8K resolution, 500 nits**
	Liquid crystal display (LCD)
	Organic light-emitting diode (OLED)
	HD
	Ultra HD
	Touch-on panel (TOP)
	Microsoft HDR streaming capable
Memory	64 GB of unified memory
	32 GB of unified memory
Primary storage	**PCIe, (Non-Volatile Memory Express) NVMe, M.2 2280 solid-state drives (SSDs)**
	• 2 TB M.2 2280 PCIe Gen 5 x4 NVMe
	• 1 TB M.2 2280 PCIe Gen 5 x4 NVMe
	• 2 TB M.2 2280 PCIe Gen 4 x4 NVMe
	• 1 TB M.2 2280 PCIe Gen 4 x4 NVMe
Audio and video	Dual speakers
	HP Audio Boost 2.0

Table 1-1 Product components and their descriptions (continued)

Category	Description
	Poly Studio
	Support for DTS:X Ultra
	Integrated 5MP fixed-focus IR camera module, USB 2.0 interface, wide field of view, and AI features
	Dual-array digital microphone with appropriate software: beam forming, echo cancellation, noise suppression
	infrared (IR)
Wireless	**Wireless Local Area Network (WLAN)**
	MediaTek MT7925 Wi-Fi® 7 + Bluetooth® 5.4
	Compatible with Miracast® devices
Ports	Audio-out (headphone)/audio-in (microphone) combo jack
	HDMI v2.1 supporting: up to 4096 × 2160 @ 120 Hz with HDCP 2.3
	USB 3.2 Gen 2 Type C® (two, left side)
	AC Smart Pin adapter plug
Keyboard/pointing devices	**Keyboard**
	Full size, backlit, stormy grey
	Touchpad
	Clickpad with image sensor
	Multitouch gestures enabled
	Precision touchpad support
	Support for Modern Trackpad Gestures
	Taps enabled as default
Power requirements	**Battery**
	4-cell, 80Whr lithium polymer battery, 5.128Ah capacity
	HP Fast Charge Technology
	Smart AC adapters
	140 W, slim barrel, PFC, 4.5 mm
	Power cord
	C5, 1 m (3.3 ft)
	Non-Power Factor Correction (nPFC) or Power Factor Correction (PFC)
Security	Supports Trusted Platform Module (TPM) 2.0, firmware based
Operating system	Windows® 11 Home 64 NextGen Premium
	Windows 11 Home 64 NextGen Standard
	Windows 11 Pro 64 NextGen Premium
	Windows 11 Pro 64 NextGen Standard

Table 1-1 Product components and their descriptions (continued)

Category	Description
	Windows 11 Home 64 NextGen Premium Single Language Africa Market PPP
	Windows 11 Home 64 NextGen Standard Single Language Africa Market PPP
	Windows 11 Home 64 NextGen Premium Single Language APAC EM PPP
	Windows 11 Home 64 NextGen Standard Single Language APAC EM PPP
	Windows 11 Home 64 NextGen Premium Chinese Market CPPP
	Windows 11 Home 64 NextGen Standard Chinese Market CPPP
	Windows 11 Home 64 NextGen Premium Single Language India Market PPP
	Windows 11 Home 64 NextGen Standard Single Language India Market PPP
	Windows 11 Home 64 NextGen Premium Single Language Indonesia Market PPP
	Windows 11 Home 64 NextGen Standard Single Language Indonesia Market PPP
Serviceability	**End-user replaceable parts**
	AC adapter
	Bottom cover
	Battery
	SSD

2 Getting to know your computer

Your computer features top-rated components. This chapter provides details about your components, where they are located, and how they work.

Right side

Use this illustration and table to identify the components on the right side of the computer.

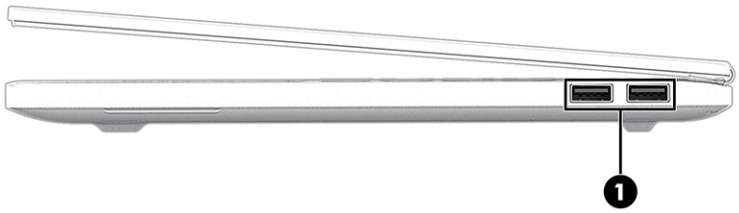

Table 2-1 Right-side components and their descriptions

	Component	Description
(1)	USB 10 Gbps ports (2)	Connect a USB device, provide high-speed data transfer, and (for select products) charge small devices (such as a smartphone) when the computer is on or in sleep mode. **NOTE:** Use a standard USB Type-A charging cable or cable adapter (purchased separately) when charging a small external device.

Left side

Use this illustration and table to identify the components on the left side of the computer.

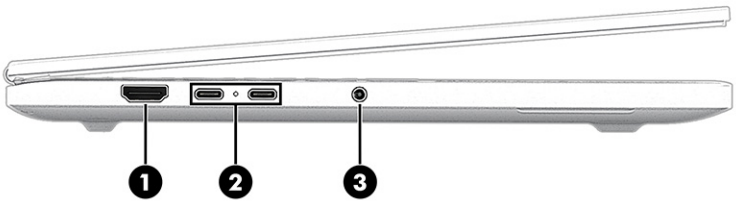

Table 2-2 Left-side components and their descriptions

		Component	Description
(1)	HDMI	HDMI port	Connects an optional video or audio device, such as a high-definition television, any compatible digital or audio component, or a high-speed High-Definition Multimedia Interface (HDMI) device.
(2)	40Gbps	USB Type-C® 40 Gbps power connectors and ports with HP Sleep and Charge (2)	Connect an AC adapter that has a USB Type-C connector, supplying power to the computer and, if needed, charging the computer battery. – and – Connect a USB device, provide data transfer, and charge small devices (such as a smartphone), even when the computer is off. **NOTE:** Use a standard USB Type-C charging cable or cable adapter (purchased separately) when charging a small external device.
(3)		Audio-out (headphone)/Audio-in (microphone) combo jack	Connects optional powered stereo speakers, headphones, earbuds, a headset, or a television audio cable. Also connects an optional headset microphone. This jack does not support optional standalone microphones. **WARNING!** To reduce the risk of personal injury, adjust the volume before putting on headphones, earbuds, or a headset. For additional safety information, see the *Regulatory, Safety, and Environmental Notices*. To access this guide: ■ Select the **Search** icon in the taskbar, type `HP Documentation` in the search box, and then select **HP Documentation**. **NOTE:** When a device is connected to the jack, the computer speakers are disabled.

Display

The computer display can include essential components such as speakers, antennas, cameras, and microphones.

Low blue light mode (select products only)

Your computer display is shipped from the factory in low blue light mode for improved eye comfort and safety. Also, blue light mode automatically adjusts blue light emissions when you are using the computer at night or for reading.

⚠ **WARNING!** To reduce the risk of serious injury, read the *Safety & Comfort Guide*. It describes proper workstation setup and proper posture, health, and work habits for computer users. The *Safety & Comfort Guide* also provides important electrical and mechanical safety information. The *Safety & Comfort Guide* is available on the web at http://www.hp.com/ergo.

Wake-on-voice (select products only)

Use the wake-on-voice feature to wake or interact with your computer quickly.

To access the wake-on-voice settings, follow these steps:

1. Select the **Search** icon in the taskbar, type `Xiaowei` in the search box, and then select **Xiaowei**.
2. When the tool opens, scan the QR code with your mobile device, which takes you to the settings page, where you can select your wake-on-voice features.
3. Follow the on-screen instructions.

NOTE: Allow the Xiaowei app to continue running on the computer.

Use this illustration and table to identify components on the display.

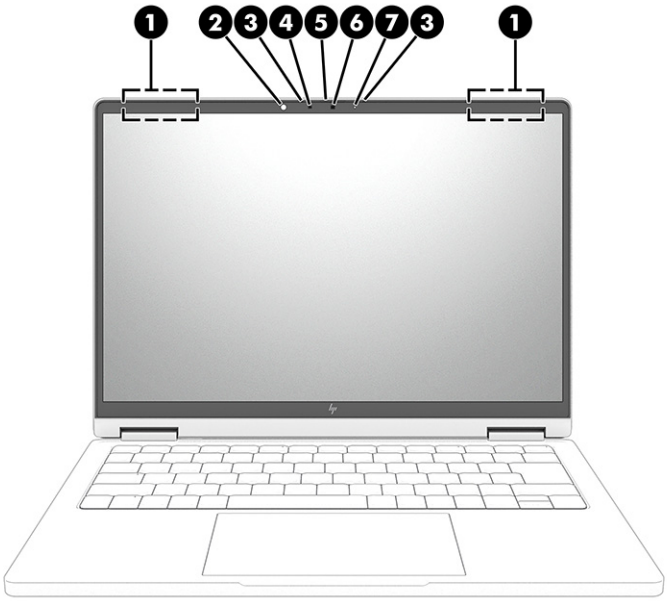

Table 2-3 Display components and their descriptions

	Component	Description
(1)	WLAN antennas* (2)	Send and receive wireless signals to communicate with wireless local area networks (WLANs).
(2)	Infrared camera light	On: The camera is in use.
(3)	Internal microphones (2)	Record sound.
(4)	Infrared camera	Allows you to video chat, record video, and record still images. **NOTE:** Camera functions vary depending on the camera hardware and software installed on your product.
(5)	Camera privacy cover (select products only)	By default, the camera lens is uncovered, but you can slide the camera privacy cover to block the camera's view. To use the camera, slide the camera privacy cover in the opposite direction to reveal the lens. **NOTE:** If you have both front-facing and rear-facing cameras, when one camera lens is revealed and ready to use, the other is concealed.

Table 2-3 **Display components and their descriptions (continued)**

	Component	Description
(6)	Camera	Allows you to video chat, record video, and record still images. **NOTE:** Camera functions vary depending on the camera hardware and software installed on your product.
(7)	Camera light	On: The camera is in use.

*The antennas are not visible from the outside of the computer. For optimal transmission, keep the areas immediately around the antennas free from obstructions.

For wireless regulatory notices, see the section of the *Regulatory, Safety, and Environmental Notices* that applies to your country or region.

To access this guide:

- Select the **Search** icon in the taskbar, type `HP Documentation` in the search box, and then select **HP Documentation**.

Keyboard area

Keyboards can vary by language.

NOTE: The keyboard area, including the function keys and (select products only) power key, is disabled in stand, tent, and tablet modes. To enable the keyboard, including the power key, change to the clamshell mode.

Touchpad settings and components

Learn the touchpad settings and components.

Touchpad settings

Learn how to adjust touchpad settings.

Adjusting touchpad settings

Use these steps to adjust touchpad settings and gestures.

1. Select the **Search** icon in the taskbar, type `touchpad settings` in the search box, and then press enter.
2. Choose a setting.

Turning on the touchpad

Follow these steps to turn on the touchpad.

1. Select the **Search** icon in the taskbar, type `touchpad settings` in the search box, and then press enter.
2. Using an external mouse, click the **touchpad** button.

   If you are not using an external mouse, press the Tab key repeatedly until the pointer rests on the **touchpad** button. Then press the spacebar to select the button.

Touchpad components

Use this illustration and table to identify the touchpad components.

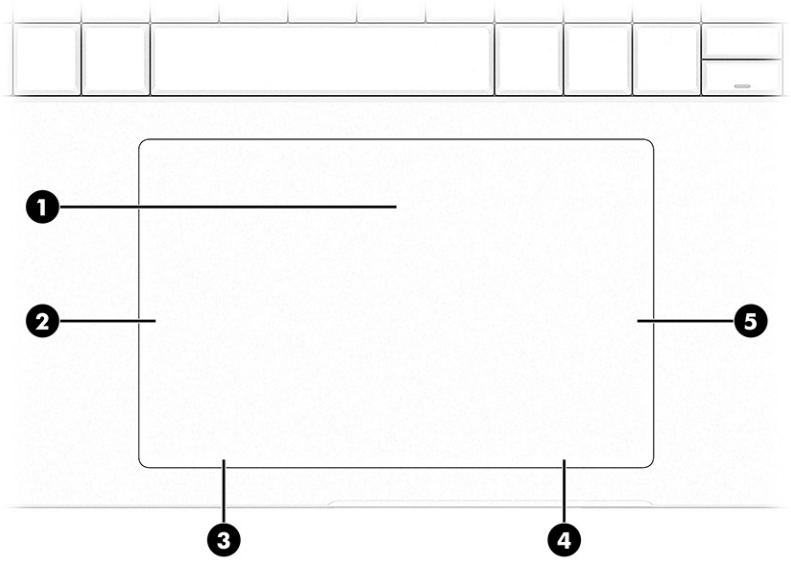

Table 2-4 Touchpad components and their descriptions

	Component	Description
(1)	Touchpad zone	Reads your finger gestures to move the pointer or activate items on the screen.
(2)	Brightness control	Drag your finger up or down to increase or decrease the screen brightness. **NOTE:** This feature is disabled by default. To enable brightness control on the touchpad, select **Start**, select **Settings**, select **Bluetooth & devices**, and then select **Touchpad**. Under **Touchpad**, turn on **Enable gesture control**.
(3)	Left touchpad button	Functions like the left button on an external mouse.
(4)	Right touchpad button	Functions like the right button on an external mouse.
(5)	Volume control	Drag your finger up or down to increase or decrease the speaker volume. **NOTE:** This feature is disabled by default. To enable volume control on the touchpad, select **Start**, select **Settings**, select **Bluetooth & devices**, and then select **Touchpad**. Under **Touchpad**, turn on **Enable gesture control**.

Lights

Use this illustration and table to identify the lights on the computer.

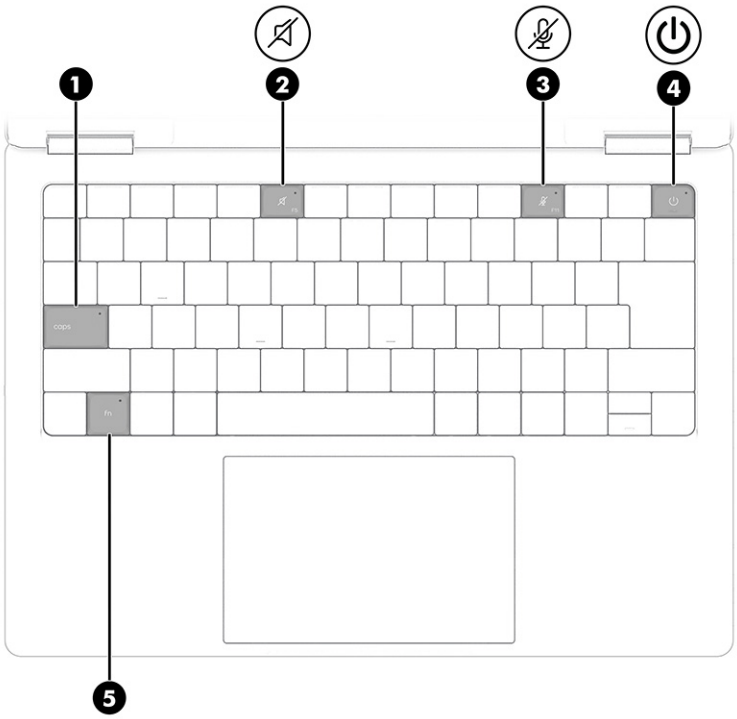

Table 2-5 Lights and their descriptions

		Component	Description
(1)		Caps lock light	On: Caps lock is on, which switches the key input to all capital letters.
(2)		Mute light	• On: Computer sound is off. • Off: Computer sound is on.
(3)		Microphone mute light	• On: Microphone is off. • Off: Microphone is on.
(4)		Power light	• On: The computer is on. • Blinking (select products only): The computer is in the sleep state, a power-saving state. The computer shuts off power to the display and other unnecessary components. • Off: Depending on your computer model, the computer is off, in hibernation, or in sleep. Hibernation is the power-saving state that uses the least amount of power.
(5)		Fn lock light	• On: FN Lock in enabled. • Off: FN Lock in disabled. **NOTE:** On some products, FN Lock is assigned as the secondary function of the left Shift key. To enable FN Lock, press fn + left Shift. Repeat the same key combination again to disable FN Lock.

Special keys

Use this illustration to identify the special keys.

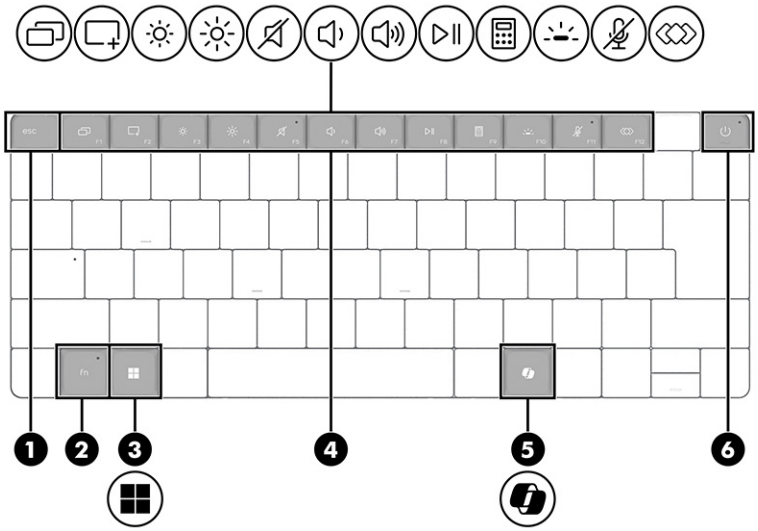

Table 2-6 Special keys and their descriptions

	Component	Description
(1)	esc key	Displays system information when pressed in combination with the fn key.
(2)	fn key	Executes specific functions when pressed in combination with another key. **NOTE:** When using combination shortcut keys, the order in which keys are pressed may affect the result.
(3)	Windows key	Opens the Start menu. **NOTE:** Pressing the Windows key again will close the Start menu.
(4)	Action keys	Execute frequently used system functions as defined by the icon symbols on f1 through f12 function keys. See Action keys on page 11.
(5)	Windows Copilot key	Opens Windows Copilot (select products only). **NOTE:** Copilot in Windows (select products only) requires Windows 11. Some features require a neural processing unit (NPU). The timing of feature delivery and availability varies by market and device. You must have a Microsoft account to use the Copilot feature. When the Copilot feature is not available, pressing the Copilot key opens the Bing search engine. See http://aka.ms/WindowsAIFeatures.

Table 2-6 Special keys and their descriptions (continued)

		Component	Description
(6)		Power button	• When the computer is off, press the button briefly to turn on the computer. • When the computer is on, press the button briefly to initiate sleep. • When the computer is in the sleep state, press the button briefly to exit sleep (select products only). • When the computer is in hibernation, press the button briefly to exit hibernation. **IMPORTANT:** Pressing and holding down the power button results in the loss of unsaved information. If the computer has stopped responding and shutdown procedures are ineffective, press and hold the power button down for at least 10 seconds to turn off the computer. To learn more about your power and sleep settings: ■ Right-click the **Power** icon, and then select **Power and sleep settings**.

Action keys

Action keys execute frequently used system functions as defined by the icon symbols on f1 through f12. The action keys vary by computer.

If you do not see one of these icons on your keyboard, your computer does not include the feature associated with the icon.

■ To use an action key, press and hold the key.

NOTE: On some products, you must press the fn key in combination with the action key.

Table 2-7 Action keys and their descriptions

Icon	Description
	Switches the screen image among display devices connected to the system. For example, if a monitor is connected to the computer, repeatedly pressing the key alternates the screen image from computer display to monitor display to simultaneous display on both the computer and the monitor.
	Opens the Snipping Tool app. This app takes snapshots to copy words or images from all or part of your computer screen. You can also use this app to make changes or notes, and then save and share.
	Decreases the screen brightness incrementally while you hold down the key.
	Increases the screen brightness incrementally while you hold down the key.

Table 2-7 Action keys and their descriptions (continued)

Icon	Description
	Mutes or restores speaker sound.
	Decreases speaker volume incrementally while you hold down the key.
	Increases speaker volume incrementally while you hold down the key.
	Starts, pauses, or resumes playback of an audio CD, a DVD, or a BD.
	Opens the calculator app.
	Turns the keyboard backlight off or on and allows you to select the duration it will remain on. On select products, you can adjust the brightness of the keyboard backlight. Press the key repeatedly to adjust the brightness from high (when you first start up the computer), to low, to off. With the keyboard backlight on, press and hold the key to adjust the duration from 30 seconds to 3 minutes to always. A message that shows the current duration appears on the screen. After you adjust the keyboard backlight setting, the backlight reverts to your previous setting each time you turn on the computer. The keyboard backlight turns off after the selected duration of inactivity. To turn the keyboard backlight back on, press any key or tap the touchpad (select products only). To conserve battery power, turn off this feature.
	Mutes the microphone.
	Programmable key Executes frequently used tasks. Some tasks might not be available on all products. • Opens an application, file, or website • Enters frequently used text into a permanent clipboard • Ability to change system profiles • Ability to change system properties • Executes user-defined key sequences

Rear

Use this illustration and table to identify the rear component.

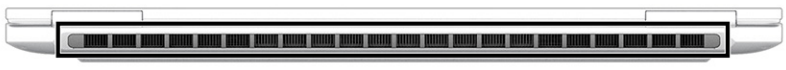

Table 2-8 Rear component and description

Component	Description
Vent	Enables airflow to cool internal components. **NOTE:** The computer fan starts up automatically to cool internal components and prevent overheating. It is normal for the internal fan to cycle on and off during routine operation.

Bottom

Use this illustration and table to identify the bottom component.

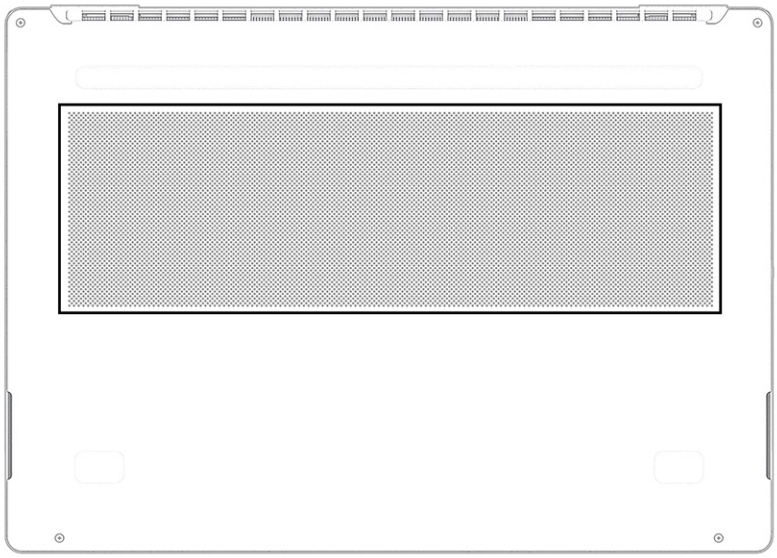

Table 2-9 Bottom component and description

Component	Description
Vent	Enables airflow to cool internal components. **NOTE:** The computer fan starts up automatically to cool internal components and prevent overheating. It is normal for the internal fan to cycle on and off during routine operation.

Labels

The labels affixed to the computer provide information that you might need when you troubleshoot system problems or travel internationally with the computer. Labels can be in paper form or imprinted on the product.

IMPORTANT: Check the following locations for the labels described in this section: the bottom of the computer, inside the battery bay, under the service door, on the back of the display, or on the bottom of a tablet kickstand.

- Service label—Provides important information to identify your computer. When contacting support, you might be asked for the serial number, the product number, or the model number. Locate this information before you contact support.

  Your service label will resemble the following example:



Table 2-10 Service label components

	Component
(1)	Serial number
(2)	Product ID
(3)	HP product name and model number

- Regulatory labels—Provide regulatory information about the computer.
- Wireless certification labels—Provide information about optional wireless devices and the approval markings for the countries or regions in which the devices have been approved for use.

3 Illustrated parts catalog

Use this chapter to determine the spare parts that are available for the computer.

Computer major components

Use this illustration and table to identify the computer major components.

NOTE: HP continually improves and changes product parts. For complete and current information about supported parts for your computer, go to https://partsurfer.hp.com/, select your country or region, and then follow the on-screen instructions.

NOTE: Details about your computer, including model, serial number, product key, and length of warranty, are on the service tag at the bottom of your computer.

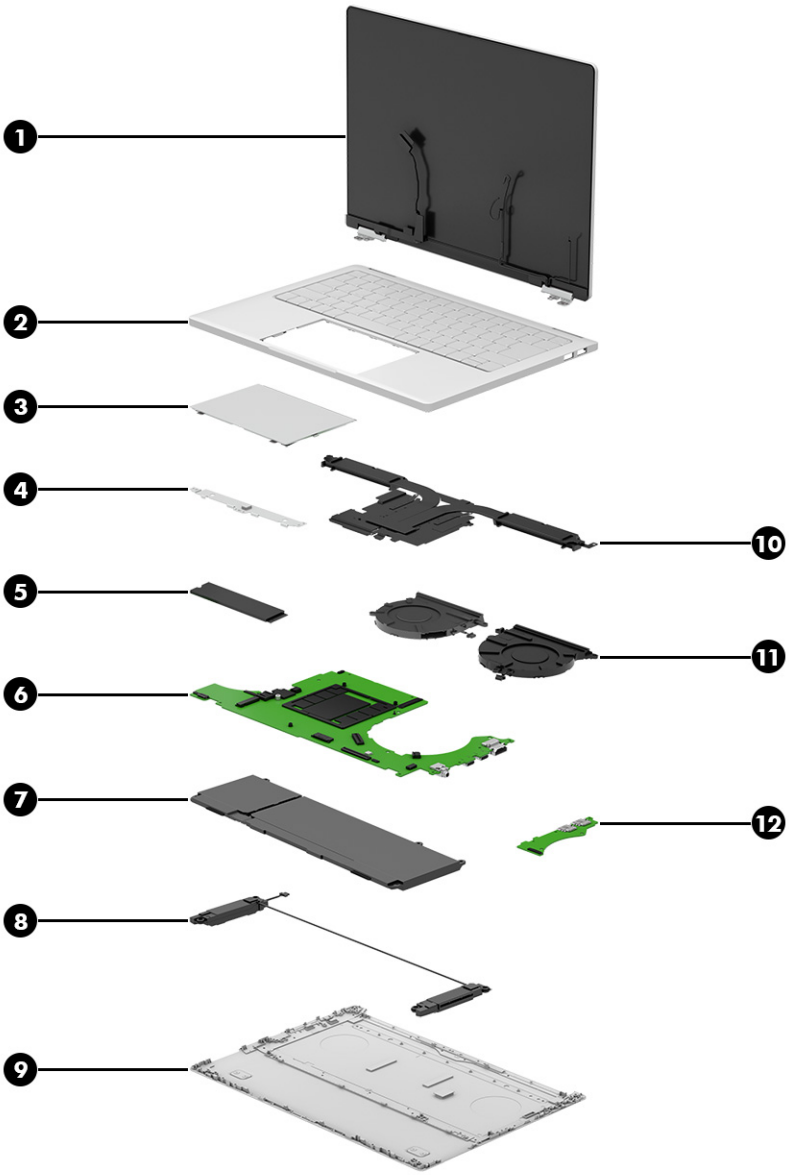

Table 3-1 Computer major component descriptions and part numbers

Item	Component	CSR category*	Spare part number
(1)	**Display assembly** **NOTE:** Display spare parts are available as subcomponents, not as whole units. Display subcomponent spare parts are available. For spare part information, see Display assembly subcomponents on page 17.		not available as a spare part
(2)	**Top cover/keyboard** **NOTE:** For a detailed list of country codes, see Keyboard with top cover on page 55.		
	Stormy grey, backlit	N	Q22513-001
	Stormy grey, backlit, French Canada	N	Q22513-DB1

Table 3-1 Computer major component descriptions and part numbers (continued)

Item	Component	CSR category*	Spare part number
(3)	**Touchpad**	N	Q22522-001
(4)	**Infrared sensor board**	N	Q22517-001
(5)	**SSD**		
	2 TB M.2 2280 PCIe Gen 5 x4 NVMe	A	P73031-001
	1 TB M.2 2280 PCIe Gen 5 x4 NVMe	A	P73030-001
	2 TB M.2 2280 PCIe Gen 4 x4 NVMe	A	P07215-001
	1 TB M.2 2280 PCIe Gen 4 x4 NVMe	A	N77394-001
(6)	**System board** (includes integrated processor and system memory) **NOTE:** All system board spare part kits include replacement thermal material.		
	Snapdragon X675 Elite, 64GB unified memory	N	Q22511-601
	Snapdragon X675 Elite, 32GB unified memory	N	Q32018-601
	Snapdragon X650 Plus, 32GB unified memory	N	Q22510-601
(7)	**Battery** (4-cell, 80Whr lithium polymer battery, 5.128Ah capacity)	A	P40761-001
(8)	**Speakers**	N	Q22521-001
(9)	**Bottom cover**	A	Q22523-001
(10)	**Heat sink** (includes replacement thermal material)	N	Q22519-001
(11)	**Fans**	N	Q22520-001
(12)	**USB board**	N	Q22518-001
	WLAN module (not illustrated)		
	MediaTek MT7925 Wi-Fi 7 + Bluetooth 5.4	N	N98232-005

Table 3-2 CSR part categories*

Category	Description	Replacement responsibility
CSR A	Self-service parts	Customers can replace these easily replaceable parts. Replacement by trained technicians might incur additional cost.
CSR N	Non-self-service parts	Only trained service technicians should replace these complex parts.

Display assembly subcomponents

Use this illustration and table to identify the display assembly subcomponents.

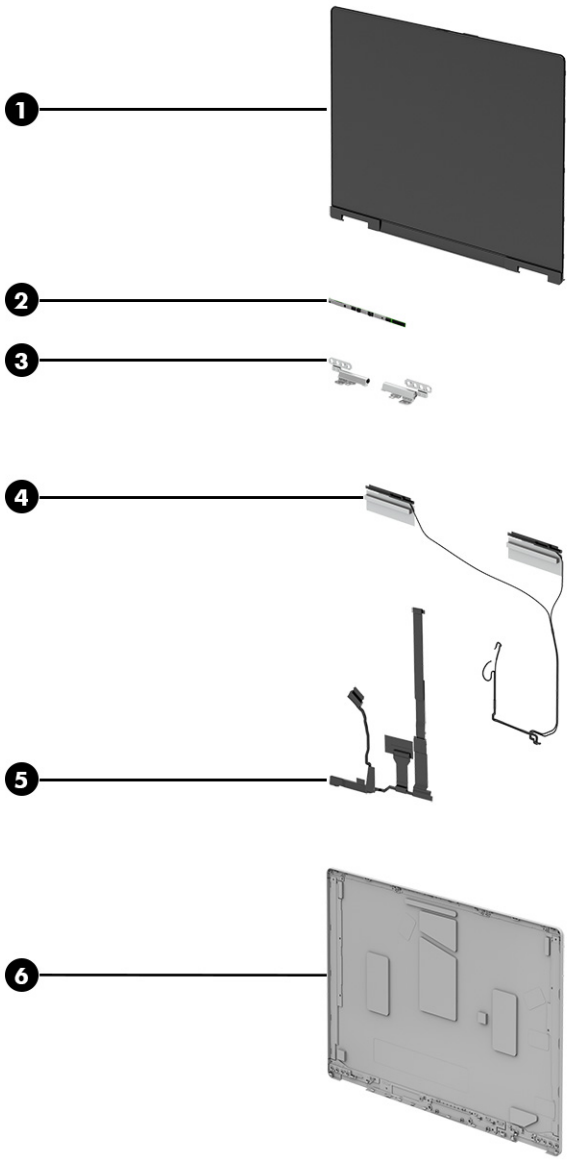

Table 3-3 Display component descriptions and part numbers

Item	Component	Spare part number
(1)	**Display panel** (14-inch BrightView Ultrawide Viewing Angle (UWVA) OLED panel kit, 2.8K resolution, 500 nits, includes display cable)	Q22512-001
(2)	**Camera** (includes rubber spacer and cable)	Q22528-001
(3)	**Hinge kit**	Q22526-001
(4)	**Antenna and cable kit**	Q22515-001
(5)	**Touch control board and cables**	Q22525-001
(6)	**Back cover** (includes antenna)	Q22524-001
	Display cable (not illustrated)	Q22514-001

Miscellaneous parts

Use this table to identify the miscellaneous parts.

Table 3-4 Miscellaneous part descriptions and part numbers

Component	Spare part number
Repair support items	Q36312-888
Hinge cap	Q22527-001
AC adapter (140 W, USB-C, 6.5 ft (2 m)	P58633-001
Screw Kit	Q22516-001

4 Removal and replacement procedures preliminary requirements

Use this information to properly prepare to disassemble and reassemble the computer.

Tools required

You need the following tools to complete the removal and replacement procedures.

- Tweezers
- Nonconductive, nonmarking pry tool
- Magnetic Phillips P1 screwdriver

Service considerations

The following sections include some of the considerations that you must keep in mind during disassembly and assembly procedures.

NOTE: As you remove each subassembly from the computer, place the subassembly and all accompanying screws away from the work area to prevent damage.

Plastic parts

Using excessive force during disassembly and reassembly can damage plastic parts.

Cables and connectors

Handle cables with extreme care to avoid damage.

IMPORTANT: When servicing the computer, be sure that cables are placed in their proper locations during the reassembly process. Improper cable placement can damage the computer.

Apply only the tension required to unseat or seat the cables during removal and insertion. Handle cables by the connector whenever possible. In all cases, avoid bending, twisting, or tearing cables. Be sure that cables are routed so that they cannot be caught or snagged as you remove or replace parts. Handle flex cables with extreme care; these cables tear easily.

Drive handling

Note the following guidelines when handling drives.

IMPORTANT: Drives are fragile components. Handle them with care. To prevent damage to the computer, damage to a drive, or loss of information, observe these precautions:

- Before removing or inserting a hard drive, shut down the computer. If you are unsure whether the computer is off or in hibernation or sleep mode, turn the computer on, and then shut it down through the operating system.

- Before handling a drive, be sure that you are discharged of static electricity. While handling a drive, avoid touching the connector.
- Handle drives on surfaces covered with at least 2.54 cm (1 inch) of shock-proof foam.
- Avoid dropping drives from any height onto any surface.
- After removing a hard drive or an optical drive, place it in a static-proof bag.
- Avoid exposing an internal hard drive to products that have magnetic fields, such as monitors or speakers.
- Avoid exposing a drive to temperature extremes or liquids.
- If a drive must be mailed, place the drive in a bubble pack mailer or other suitable form of protective packaging, and label the package “FRAGILE.”

Electrostatic discharge information

A sudden discharge of static electricity from your finger or other conductor can destroy static-sensitive devices or microcircuitry. Often the spark is neither felt nor heard, but damage occurs. An electronic device exposed to electrostatic discharge (ESD) might not appear to be affected at all and can work perfectly throughout a normal cycle. The device might function normally for a while, but it has been degraded in the internal layers, reducing its life expectancy.

Networks built into many integrated circuits provide some protection, but in many cases, the discharge contains enough power to alter device parameters or melt silicon junctions.

IMPORTANT: To prevent damage to the device when you remove or install internal components, observe these precautions:

- Keep components in their electrostatic-safe containers until you are ready to install them.
- Before touching an electronic component, discharge static electricity by using the guidelines described in Personal grounding methods and equipment on page 22.
- Avoid touching pins, leads, and circuitry. Handle electronic components as little as possible.
- If you remove a component, place it in an electrostatic-safe container.

Generating static electricity

Follow these static electricity guidelines.

- Different activities generate different amounts of static electricity.
- Static electricity increases as humidity decreases.

Table 4-1 Static electricity occurrence based on activity and humidity

Event	55% relative humidity	40% relative humidity	10% relative humidity
Walking across carpet	7500 V	15,000 V	35,000 V
Walking across vinyl floor	3000 V	5000 V	12,000 V
Motions of bench worker	400 V	800 V	6000 V
Removing dual in-line packages (DIPs) from plastic tube	400 V	700 V	2000 V
Removing DIPs from vinyl tray	2000 V	4000 V	11,500 V
Removing DIPs from polystyrene foam	3500 V	5000 V	14,500 V
Removing bubble pack from PCB (printed circuit board)	7000 V	20,000 V	26,500 V
Packing PCBs in foam-lined box	5000 V	11,000 V	21,000 V

NOTE: Multiple electric components can be packaged together in plastic tubes, trays, or polystyrene foam.

NOTE: As little as 700 V of static electricity can degrade a product.

Preventing electrostatic damage to equipment

Many electronic components are sensitive to ESD. Circuitry design and structure determine the degree of sensitivity.

The following packaging and grounding precautions are necessary to prevent static electricity damage to electronic components:

- To avoid hand contact, transport products in static-safe containers such as tubes, bags, or boxes.
- Protect all electrostatic parts and assemblies with conductive or approved containers or packaging.
- Keep electrostatic-sensitive parts in their containers until they arrive at static-free stations.
- Place items on a grounded surface before removing them from their container.
- Always be properly grounded when touching a sensitive component or assembly.
- Avoid contact with pins, leads, or circuitry.
- Place reusable electrostatic-sensitive parts from assemblies in protective packaging or conductive foam.

Personal grounding methods and equipment

Using certain equipment can prevent static electricity damage to electronic components.

- **Wrist straps** are flexible straps with a maximum of 1 MΩ ±10% resistance in the ground cords. To provide proper ground, wear a strap snug against bare skin. Verify that the ground cord is connected and fits snugly into the banana plug connector on the grounding mat or workstation.
- You can use **heel straps, toe straps, and boot straps** at standing workstations. These straps are compatible with most types of shoes or boots. On conductive floors or dissipative floor mats, use them on both feet with a maximum of 1 MΩ ±10% resistance between the operator and ground.

Table 4-2 Static shielding protection levels

Method	Voltage
Antistatic plastic	1500
Carbon-loaded plastic	7500
Metalized laminate	15,000

Grounding the work area

To prevent static damage at the work area, follow these precautions.

- Cover the work surface with approved static-dissipative material.
- Use a wrist strap connected to a properly grounded work surface and use properly grounded tools and equipment.
- Use static-dissipative mats, foot straps, or air ionizers to give added protection.
- Handle electrostatic-sensitive components, parts, and assemblies by the case or PCB laminate. Handle them only at static-free work areas.
- Turn off power and input signals before inserting and removing connectors or test equipment.
- Use fixtures made of static-safe materials when fixtures must directly contact dissipative surfaces.
- Keep the work area free of nonconductive materials, such as ordinary plastic assembly aids and polystyrene foam.
- Use conductive field service tools, such as cutters, screwdrivers, and vacuums.
- Avoid contact with pins, leads, or circuitry.

Recommended materials and equipment

HP recommends certain materials and equipment to prevent static electricity.

- Antistatic tape
- Antistatic smocks, aprons, or sleeve protectors
- Conductive bins and other assembly or soldering aids
- Conductive foam
- Conductive tabletop workstations with ground cord of 1 MΩ ±10% resistance
- Static-dissipative table or floor mats with hard tie to ground
- Field service kits
- Static awareness labels
- Wrist straps and footwear straps providing 1 MΩ ±10% resistance
- Material handling packages
- Conductive plastic bags

- Conductive plastic tubes
- Conductive tote boxes
- Opaque shielding bags
- Transparent metallized shielding bags
- Transparent shielding tubes

Cleaning your computer

Cleaning your computer regularly removes dirt and debris so that your device continues to operate at its best. Use the following information to safely clean the external surfaces of your computer.

Enabling HP Easy Clean (select products only)

HP Easy Clean helps you to avoid accidental input while you clean the computer surfaces. This software disables devices such as the keyboard, touch screen, and touchpad for a preset amount of time so that you can clean all computer surfaces.

1. Start HP Easy Clean in one of the following ways:
   - Select the **Start** menu, and then select **HP Easy Clean**.
   - Select the **HP Easy Clean** icon in the taskbar.
   - Select **Start**, and then select the **HP Easy Clean** tile.
2. Now that your device is disabled for a short period, see Removing dirt and debris from your computer on page 24 for the recommended steps to clean the high-touch, external surfaces on your computer. After you remove the dirt and debris, you can also clean the surfaces with a disinfectant. See Cleaning your computer with a disinfectant on page 25 for guidelines to help prevent the spread of harmful bacteria and viruses.

Removing dirt and debris from your computer

Here are the recommended steps to clean dirt and debris from your computer.

For computers with wood veneer, see Caring for wood veneer (select products only) on page 26.

1. Wear disposable gloves made of latex (or nitrile gloves, if you are latex-sensitive) when cleaning the surfaces.
2. Turn off your device and unplug the power cord and other connected external devices. Remove any installed batteries from items such as wireless keyboards.

> ⚠ **CAUTION:** To prevent electric shock or damage to components, never clean a product while it is turned on or plugged in.

3. Moisten a microfiber cloth with water. The cloth should be moist, but not dripping wet.

> **IMPORTANT:** To avoid damaging the surface, avoid abrasive cloths, towels, and paper towels.

4. Wipe the exterior of the product gently with the moistened cloth.

IMPORTANT: Keep liquids away from the product. Avoid getting moisture in any openings. If liquid makes its way inside your HP product, it can cause damage to the product. Do not spray liquids directly on the product. Do not use aerosol sprays, solvents, abrasives, or cleaners containing hydrogen peroxide or bleach that might damage the finish.

5. Start with the display (if applicable). Wipe carefully in one direction, and move from the top of the display to the bottom. Finish with any flexible cables, like power cord, keyboard cable, and USB cables.

6. Be sure that surfaces have completely air-dried before turning the device on after cleaning.

7. Discard the gloves after each cleaning. Clean your hands immediately after you remove the gloves.

See Cleaning your computer with a disinfectant on page 25 for recommended steps to clean the high-touch, external surfaces on your computer to help prevent the spread of harmful bacteria and viruses.

Cleaning your computer with a disinfectant

The World Health Organization (WHO) recommends cleaning surfaces, followed by disinfection, as a best practice for preventing the spread of viral respiratory illnesses and harmful bacteria.

After cleaning the external surfaces of your computer using the steps in Removing dirt and debris from your computer on page 24, Caring for wood veneer (select products only) on page 26, or both, you might also choose to clean the surfaces with a disinfectant. A disinfectant that is within HP's cleaning guidelines is an alcohol solution consisting of 70% isopropyl alcohol and 30% water. This solution is also known as rubbing alcohol and is sold in most stores.

Follow these steps when disinfecting high-touch, external surfaces on your computer:

1. Wear disposable gloves made of latex (or nitrile gloves, if you are latex-sensitive) when cleaning the surfaces.

2. Turn off your device and unplug the power cord and other connected external devices. Remove any installed batteries from items such as wireless keyboards.

CAUTION: To prevent electric shock or damage to components, never clean a product while it is turned on or plugged in.

3. Moisten a microfiber cloth with a mixture of 70% isopropyl alcohol and 30% water. The cloth should be moist, but not dripping wet.

CAUTION: Do not use any of the following chemicals or any solutions that contain them, including spray-based surface cleaners: bleach, peroxides (including hydrogen peroxide), acetone, ammonia, ethyl alcohol, methylene chloride, or any petroleum-based materials, such as gasoline, paint thinner, benzene, or toluene.

IMPORTANT: To avoid damaging the surface, avoid abrasive cloths, towels, and paper towels.

4. Wipe the exterior of the product gently with the moistened cloth.

IMPORTANT: Keep liquids away from the product. Avoid getting moisture in any openings. If liquid makes its way inside your HP product, it can cause damage to the product. Do not spray liquids directly on the product. Do not use aerosol sprays, solvents, abrasives, or cleaners containing hydrogen peroxide or bleach that might damage the finish.

5. Start with the display (if applicable). Wipe carefully in one direction, and move from the top of the display to the bottom. Finish with any flexible cables, like power cord, keyboard cable, and USB cables.
6. Be sure that surfaces have completely air-dried before turning the device on after cleaning.
7. Discard the gloves after each cleaning. Clean your hands immediately after you remove the gloves.

Caring for wood veneer (select products only)

Your product might feature high-quality wood veneer. As with all natural wood products, proper care is important for best results over the life of the product. Because of the nature of natural wood, you might see unique variations in the grain pattern or subtle variations in color, which are normal.

- Clean the wood with a dry, static-free microfiber cloth or chamois.
- Avoid cleaning products containing substances such as ammonia, methylene chloride, acetone, turpentine, or other petroleum-based solvents.
- Do not expose the wood to sun or moisture for long periods of time.
- If the wood becomes wet, dry it by dabbing with an absorbent, lint-free cloth.
- Avoid contact with any substance that might dye or discolor the wood.
- Avoid contact with sharp objects or rough surfaces that might scratch the wood.

See Removing dirt and debris from your computer on page 24 for the recommended steps to clean the high-touch, external surfaces on your computer. After you remove the dirt and debris, you can also clean the surfaces with a disinfectant. See Cleaning your computer with a disinfectant on page 25 for sanitizing guidelines to help prevent the spread of harmful bacteria and viruses.

Packaging and transporting guidelines

Follow these grounding guidelines when packaging and transporting equipment.

- To avoid hand contact, transport products in static-safe tubes, bags, or boxes.
- Protect ESD-sensitive parts and assemblies with conductive or approved containers or packaging.
- Keep ESD-sensitive parts in their containers until the parts arrive at static-free workstations.
- Place items on a grounded surface before removing items from their containers.
- Always be properly grounded when touching a component or assembly.
- Store reusable ESD-sensitive parts from assemblies in protective packaging or nonconductive foam.
- Use transporters and conveyors made of antistatic belts and roller bushings. Be sure that mechanized equipment used for moving materials is wired to ground and that proper materials are selected to avoid static charging. When grounding is not possible, use an ionizer to dissipate electric charges.

Accessing support information

Use this information to find the HP support that you need.

Table 4-3 Support information locations

Service consideration	Path to access information
Records of reported failure incidents stored on the computer	**Windows:** Pre-operating system failures are logged in the BIOS Event Log. To view the BIOS Event Log: 1. Press the power button. 2. Immediately and repeatedly press esc when the power button light turns white. **NOTE:** If you do not press esc at the appropriate time, you must restart the computer and again repeatedly press esc when the power button light turns white to access the utility. 3. Press f10 to enter the BIOS setup. 4. Complete one of these tasks: • (On commercial products) Under the **Main** tab, select **BIOS event log**, and then select **View BIOS Event Log**. • (On consumer products) Under the **Main** tab, select **System Log**. Post-operating system failures are logged in the Event Viewer. 1. Turn on the computer and allow the operating system to open. 2. Select the search icon in the taskbar. 3. Type `Event Viewer`, and then press enter. 4. Select the log from the left panel. Details display in the right panel. **ChromeOS™:** 1. Go to support.google.com/chrome. 2. Search `collect Chrome device logs`.
Technical bulletins and alerts	To find technical bulletins, alerts, guides, and whitepapers: 1. Go to www.hp.com/support. 2. Follow the instructions to find your product. 3. Select **Bulletins and Alerts** to view technical bulletins.
Repair professionals	To locate repair professionals: 1. Go to www.hp.com. 2. Select **Authorized service providers**. 3. Select your location.
Component and diagnosis information, failure detection, and required action	To locate diagnosis information and actions: 1. Go to http://www.hp.com/go/techcenter/pcdiags. 2. Select the issue you want to diagnose.

5 Removal and replacement procedures for Customer Self-Repair parts

This chapter provides removal and replacement procedures for Customer Self-Repair parts.

NOTE: The Customer Self-Repair program is not available in all locations. Installing a part that is not supported by the Customer Self-Repair program can void your warranty. Check your warranty to determine whether Customer Self-Repair is supported in your location.

NOTE: The HP Support YouTube Channel (in English) has videos that provide step-by-step removal and replacement instructions for many common parts and models.

Component replacement procedures

Use these procedures to remove and replace computer components.

NOTE: Details about your computer, including model, serial number, product key, and length of warranty, are on the service tag at the bottom of your computer.

NOTE: HP continually improves and changes product parts. For complete and current information about supported parts for your computer, go to https://partsurfer.hp.com/, select your country or region, and then follow the on-screen instructions.

Make special note of each screw size and location during removal and replacement.

Preparation for disassembly

Use these procedures to remove and replace computer components.

For initial safety procedures, see Removal and replacement procedures preliminary requirements on page 20.

1. Turn off the computer. If you are unsure whether the computer is off or in hibernation or sleep mode, turn the computer on, and then shut it down through the operating system.
2. Disconnect power from the computer by unplugging the power cord from the computer.
3. Disconnect all external devices from the computer.

Bottom cover

Use this procedure to remove the bottom cover.

Table 5-1 Bottom cover description and part number

Description	Spare part number
Bottom cover	Q22523-001

Before removing the bottom cover, prepare the computer for disassembly (see Preparation for disassembly on page 28).

Remove the bottom cover:

1. Remove the three Phillips M2.0 × 4.0 screws **(1)** that secure the bottom cover to the computer.
2. Loosen the one captive screw **(2)**.
3. Use a nonmarking, nonconductive tool **(3)** to release the edges of the bottom cover from the computer.
4. Remove the bottom cover **(4)** from the computer.

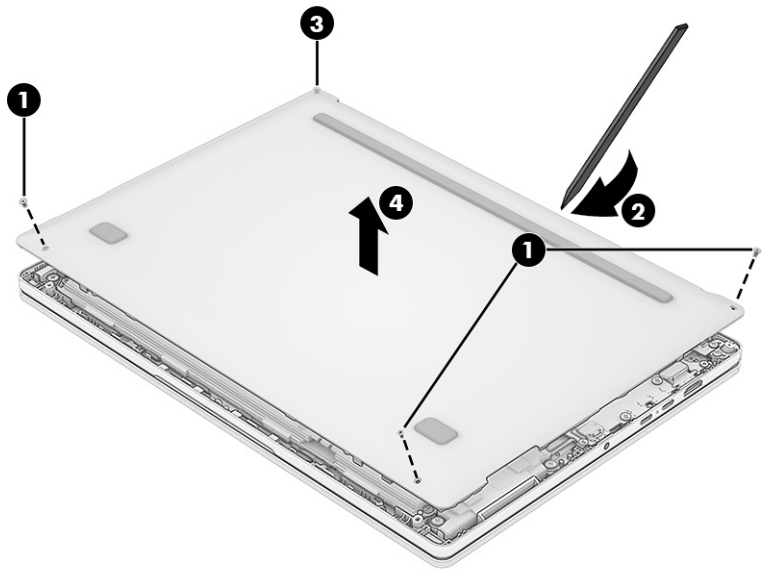

Reverse the removal procedure to replace the bottom cover.

When replacing the bottom cover, remove the Feature Byte label from the inside of the old bottom cover and place it on the inside of the new bottom cover. Be sure to keep this label with the computer, because the label is required for any future repairs.

You can locate product labels:

- Laser etched on the old bottom cover.
- In HP System Information by pressing fn + esc when you turn on the computer.

NOTE: Bottom cover appearance might vary.

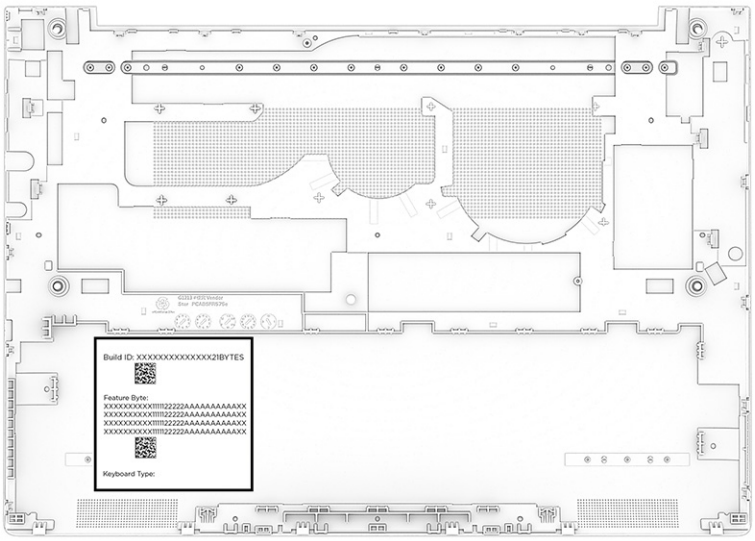

Hand write the product information onto the label of the new bottom cover. Use a ballpoint pen or marker to avoid smudging.

Example of label information



Table 5-2 Service label components

	Component
(1)	Serial number
(2)	Product ID
(3)	HP product name and model number

New bottom cover label location

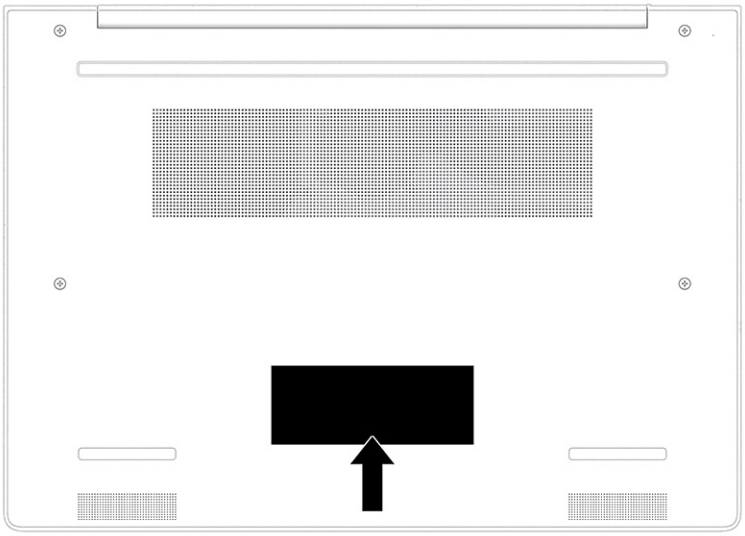

Battery

The battery removal procedure differs depending on whether you are removing and replacing the existing battery or installing a new battery. To install a new battery, you must use a revive kit.

- To install a new battery, see Installing a new battery on page 31.
- To remove and replace the existing battery, see Removing and reinstalling the same battery on page 35.

Installing a new battery

Use this procedure to install the battery. You must use a revive kit to remove the old battery and install a new one. The revive kit includes an empty containment tray and a containment tray with a battery preinstalled.

Table 5-3 Battery description and part number

Description	Spare part number
4-cell, 80Whr lithium polymer battery, 5.128Ah capacity	P40761-001

Before starting this replacement procedure:

- Ensure other individuals are sufficiently clear of your workspace.
- Ensure your workspace is clear of any flammable material such as paper or oils.
- Locate the nearest ABC dry chemical fire extinguisher for use in an emergency.

⚠ **WARNING!** This procedure requires removing the battery or disconnecting the battery cable. Use care to avoid bending, twisting, or puncturing the battery regardless of its condition. Failure to follow this replacement guide or to use HP recommended tools might damage the system and/or cause a safety hazard.

- Do *not* remove the battery from the containment tray.

- Do *not* handle or touch the battery enclosure with sharp objects such as tweezers or pliers, which might puncture the battery.
- Do *not* touch the connectors with any metallic surface or object, such as metal tools, screws, or coins, which can cause shorting across the connectors.

Should a part become stuck or difficult to remove when opening a unit where a swollen battery is suspected, or if the battery becomes stuck in the unit, stop and contact HP Support for assistance. Do not try to remove a battery by force.

NOTE: Screw locations, latch locations, and internal components might vary.

Before removing the battery, follow these steps:

1. Prepare the computer for disassembly (see Preparation for disassembly on page 28).
2. Remove the bottom cover (see Bottom cover on page 28).

WARNING! To reduce potential safety issues, use only the user-replaceable battery provided with the computer, a replacement battery provided by HP, or a compatible battery purchased from HP.

IMPORTANT: Removing a battery that is the sole power source for the computer can cause loss of information. To prevent loss of information, save your work or shut down the computer through Windows before you remove the battery.

Remove the battery:

1. To remove the battery using the revive kit:
   a. Disconnect the battery cable.
   b. Open the empty battery containment tray.



c. Remove the paper backing layer from the adhesive on the tray.

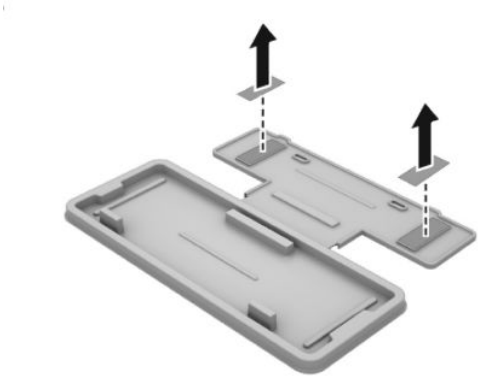

d. Turn the tray **(1)** over so that the adhesive is facing down.

e. Place the tray **(2)** centered on the battery.

f. Press down on the indentations on the tray **(3)** to adhere it to the battery.

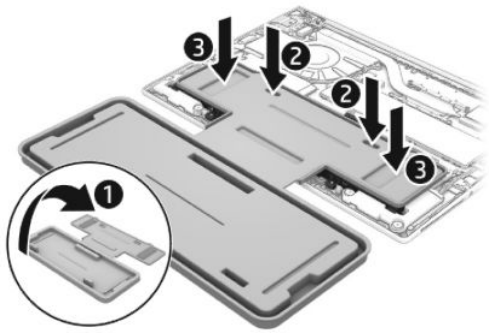

g. Remove the Phillips screws **(1)** that secure the battery to the computer. Number of screws and screw locations might vary.

h. Lift the top of the tray **(2)** to remove the battery from the computer.

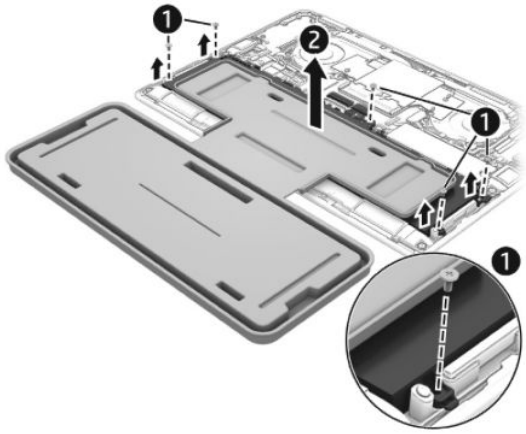

i. Rotate the battery up and over into the cavity of the containment tray.

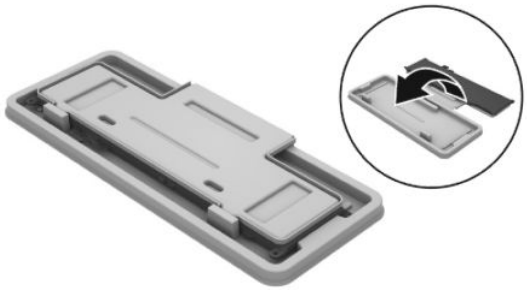

NOTE: Please recycle responsibly. For more information about recycling programs, see the HP website at http://www.hp.com/recycle.

2. To install the battery using the revive kit:

   a. Open the containment tray that includes the new battery.

   b. Turn the tray **(1)** over so the battery is facing downward, and then insert the battery **(2)** into the computer. Adhesive secures the battery to the tray.

   NOTE: To avoid damage when inserting the battery into the computer, be sure that the power connector on the battery lines up and successfully mates with the connector on the system board.

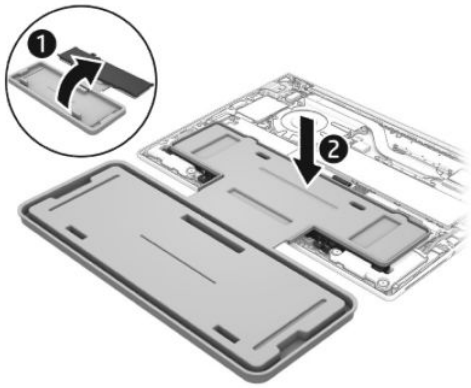

c. Install the Phillips screws **(1)** to secure the battery. Number of screws and screw locations might vary.

d. Lift the containment tray **(2)** off the battery,

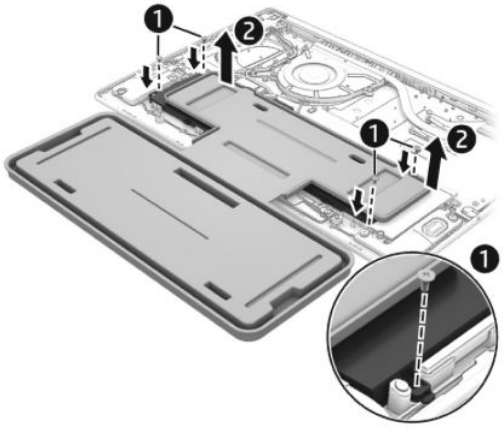

NOTE: When replacing the battery, be sure to completely reassemble the computer and plug in the AC adapter before turning the computer on.

Removing and reinstalling the same battery

Use this procedure to remove the battery.

WARNING! To avoid personal injury and damage to the product:

- Do *not* puncture, twist, or crack the battery.
- Do *not* cause an external puncture or rupture to the battery, which can cause a short inside the battery that can result in battery thermal runaway.
- Do *not* handle or touch the battery enclosure with sharp objects such as tweezers or pliers, which might puncture the battery.
- Do *not* compress or squeeze the battery case with tools or heavy objects stacked on top of the case. These actions can apply undue force on the battery.

- Do *not* touch the connectors with any metallic surface or object, such as metal tools, screws, or coins, which can cause shorting across the connectors.

For additional battery information, see the *Regulatory, Safety, and Environmental Notices*. To access this guide, select the **Search** icon in the taskbar, type `HP Documentation` in the search box, and then select **HP Documentation**.

Before removing the battery, follow these steps:

1. Prepare the computer for disassembly (see Preparation for disassembly on page 28).
2. Remove the bottom cover (see Bottom cover on page 28).

⚠ **WARNING!** To reduce potential safety issues, use only the user-replaceable battery provided with the computer, a replacement battery provided by HP, or a compatible battery purchased from HP.

IMPORTANT: Removing a battery that is the sole power source for the computer can cause loss of information. To prevent loss of information, save your work or shut down the computer through Windows before you remove the battery.

Remove the battery:

1. Disconnect the battery **(1)** from the system board.
2. Remove the five Phillips M2.0 × 4.0 screws **(2)** that secure the battery to the computer.
3. Remove the battery from the computer **(3)**.

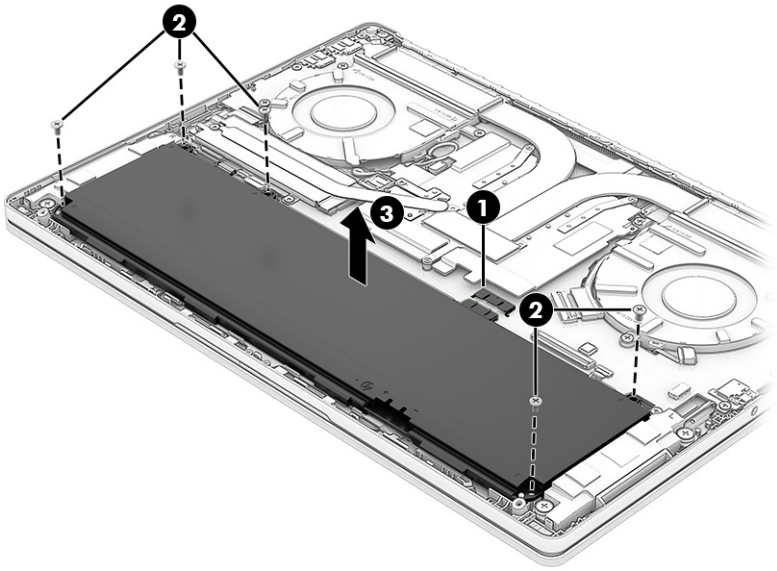

Reverse this procedure to install the battery.

NOTE: When reinstalling the battery, be sure to completely reassemble the computer and plug in the AC adapter before turning the computer on.

Solid-state drive

Use this procedure to remove the SSD.

Table 5-4 SSD descriptions and part numbers

Description	Spare part number
2 TB M.2 2280 PCIe Gen 5 x4 NVMe	P73031-001
1 TB M.2 2280 PCIe Gen 5 x4 NVMe	P73030-001
2 TB M.2 2280 PCIe Gen 4 x4 NVMe	P07215-001
1 TB M.2 2280 PCIe Gen 4 x4 NVMe	N77394-001

Before removing the SSD, follow these steps:

1. Prepare the computer for disassembly (see Preparation for disassembly on page 28).
2. Remove the bottom cover (see Bottom cover on page 28).
3. Remove the battery (see Battery on page 31).

Remove the SSD:

1. Remove the Phillips M2.0 × 2.5 screws **(1)** that secure the drive cover to the computer.
2. Remove the drive cover **(2)**.
3. Tilt the drive **(3)** up from the system board and pull gently away from the socket to remove it.

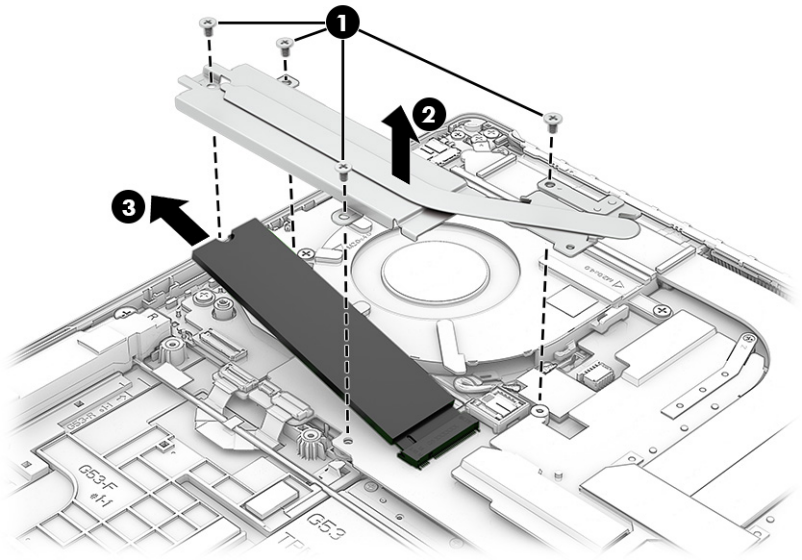

Reverse this procedure to install the SSD.

NOTE: SSDs are designed with a notch to prevent incorrect insertion.

6 Removal and replacement procedures for authorized service provider parts

This chapter provides removal and replacement procedures for authorized service provider parts.

IMPORTANT: Only an authorized service provider should access the components described in this chapter. Accessing these parts can damage the computer or void the warranty.

NOTE: Details about your computer, including model, serial number, product key, and length of warranty, are on the service tag at the bottom of your computer.

NOTE: The HP Support YouTube Channel (in English) has videos that provide step-by-step removal and replacement instructions for many common parts and models.

Component replacement procedures

Use the procedures described in this section to remove and replace computer components.

NOTE: HP continually improves and changes product parts. For complete and current information about supported parts for your computer, go to https://partsurfer.hp.com/, select your country or region, and then follow the on-screen instructions.

Make special note of each screw size and location during removal and replacement.

WLAN module

Use this procedure to install the WLAN module.

Table 6-1 WLAN module description and part number

Description	Spare part number
MediaTek MT7925 Wi-Fi 7 + Bluetooth 5.4	N98232-005

IMPORTANT: To prevent an unresponsive system, replace the wireless module only with a wireless module authorized for use in the computer by the governmental agency that regulates wireless devices in your country or region. If you replace the module and then receive a warning message, remove the module to restore device functionality, and then contact technical support.

Before removing the WLAN module, follow these steps:

1. Prepare the computer for disassembly (see Preparation for disassembly on page 28).
2. Remove the bottom cover (see Bottom cover on page 28).
3. Disconnect the battery.

Remove the WLAN module:

1. Carefully disconnect the two antenna cables **(1)** from the module.

2. Remove the Phillips M2.0 × 2.5 screw **(2)**, and then remove the WLAN module **(3)**.

NOTE: Models have either one or two WLAN antennas. On models with two antennas, the #1 white WLAN antenna cable connects to the WLAN module #1 Main terminal. The #2 black WLAN antenna cable connects to the WLAN module #1 Aux terminal.

NOTE: Your WLAN module may be in a different configuration from the illustration below, but the steps are the same.

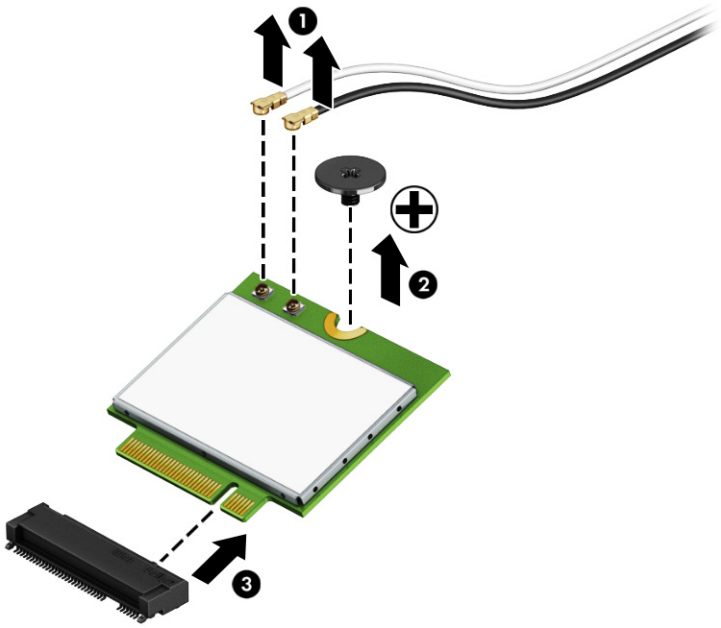

3. If the WLAN antenna is not connected to the terminal on the WLAN module, install a protective sleeve on the antenna connector, as shown in the following illustration.

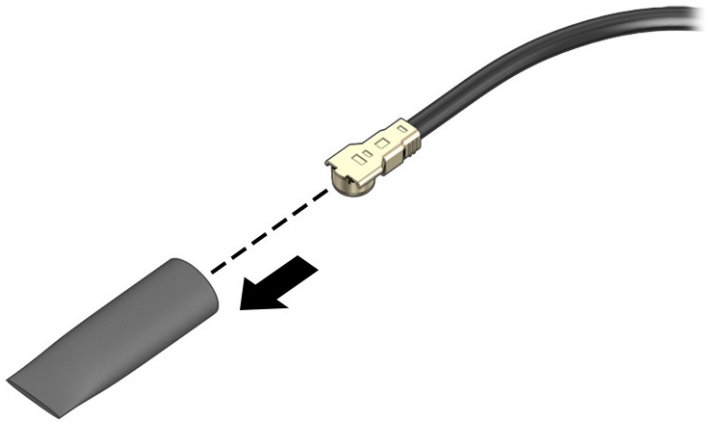

Reverse this procedure to install the WLAN module.

Heat sink

Use this procedure to remove the heat sink.

Table 6-2 Heat sink description and part number

Description	Spare part number
Heat sink (includes thermal material)	Q22519-001

Before removing the heat sink, follow these steps:

1. Prepare the computer for disassembly (see Preparation for disassembly on page 28).
2. Remove the bottom cover (see Bottom cover on page 28).
3. Remove the battery (see Battery on page 31).

Remove the heat sink:

1. In the order indicated on the heat sink, remove the five Phillips M2.0 × 4.0 screws **(1)** that secure the heat sink to the computer.
2. Remove the heat sink **(2)** from the computer.

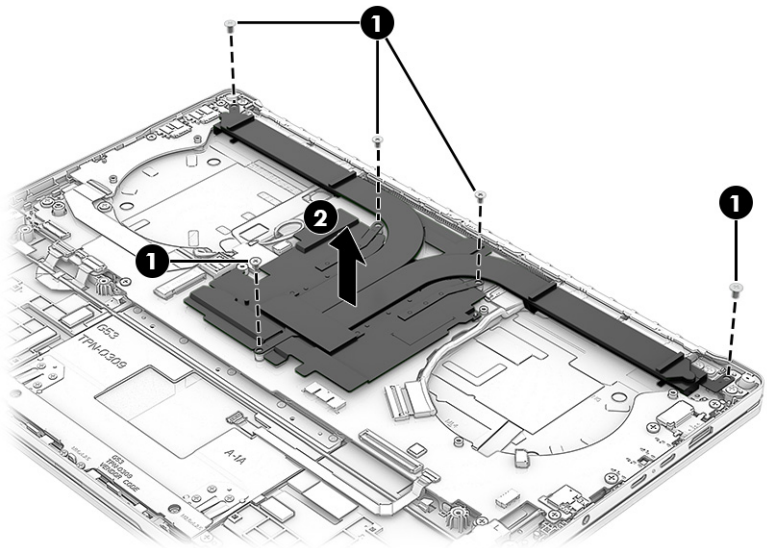

3. Thoroughly clean the thermal material from the surfaces of the heat sink and the system board components each time the heat sink is removed. Replacement thermal material is included with the heat sink and system board spare part kits. The following illustration shows the replacement thermal material locations.

   Thermal paste is used on the system board components **(1)** and on the heat sink areas **(2)** that service them.

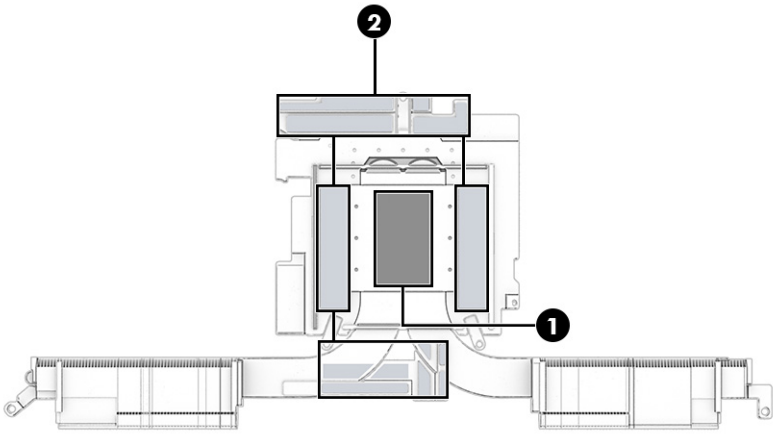

Reverse this procedure to install the heat sink.

Fans

Use this procedure to remove the fans.

Table 6-3 Fan description and part number

Description	Spare part number
Fans	Q22520-001

Before removing the fan, follow these steps:

1. Prepare the computer for disassembly (see Preparation for disassembly on page 28).
2. Remove the bottom cover (see Bottom cover on page 28).
3. Remove the battery (see Battery on page 31).

Remove the fan assembly:

1. Remove the three Phillips M2.0 × 5.0 screws **(1)** that secure each fan to the computer.
2. Disconnect the fan cable **(2)** from the system board.

3. Remove the fans **(3)** from the computer.

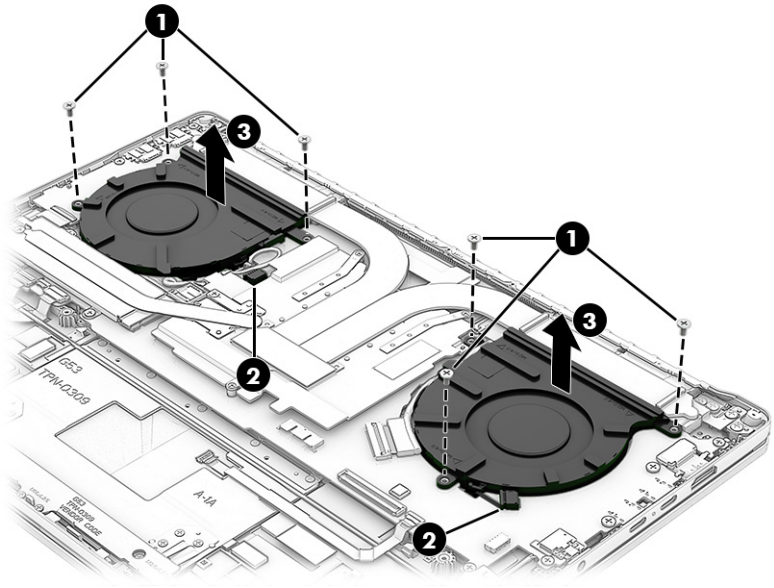

Reverse this procedure to install the fan.

Speakers

Use this procedure to remove the speakers.

Table 6-4 Speaker description and part number

Description	Spare part number
Speaker kit	Q22521-001

Before removing the speakers, follow these steps:

1. Prepare the computer for disassembly (see Preparation for disassembly on page 28).
2. Remove the bottom cover (see Bottom cover on page 28).
3. Remove the battery (see Battery on page 31).

Remove the speakers:

1. Disconnect the speaker cable **(1)** from the system board.
2. Remove the four Phillips M2.0 × 4.0 screws **(2)** that secure each speaker to the computer.
3. Remove the speaker cable from the clips **(3)** at the top of the battery.

4. Remove the speakers **(4)** from the computer.

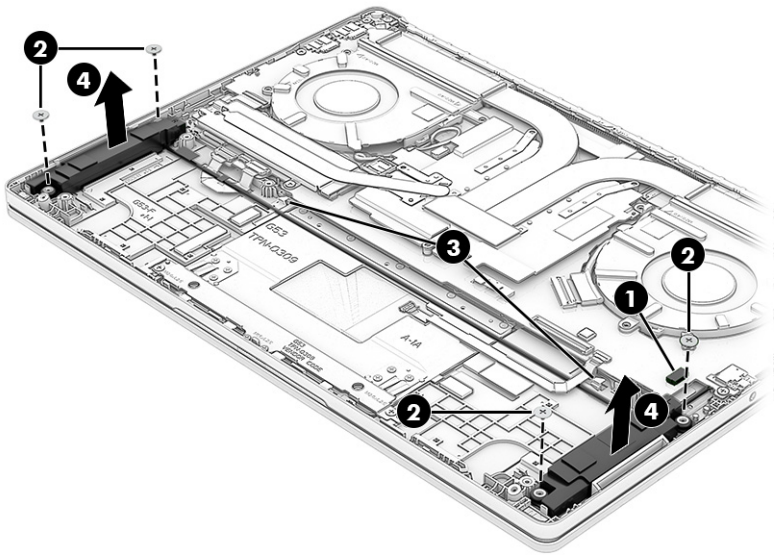

Reverse this procedure to install the speakers.

USB board

Use this procedure to remove the USB board.

Table 6-5 USB board description and part number

Description	Spare part number
USB board	Q22518-001

Before removing the USB board, follow these steps:

1. Prepare the computer for disassembly (see Preparation for disassembly on page 28).
2. Remove the bottom cover (see Bottom cover on page 28).
3. Remove the battery (see Battery on page 31).
4. Remove the fans (see Fans on page 41).

Remove the USB board:

1. Remove the Phillips M2.0 × 3.0 screws **(1)** that secure the board to the computer.
2. Remove the mylar cover **(2)**.
3. Disconnect the cable from the system board ZIF connector **(3)**.

4. Remove the board **(4)** from the computer.

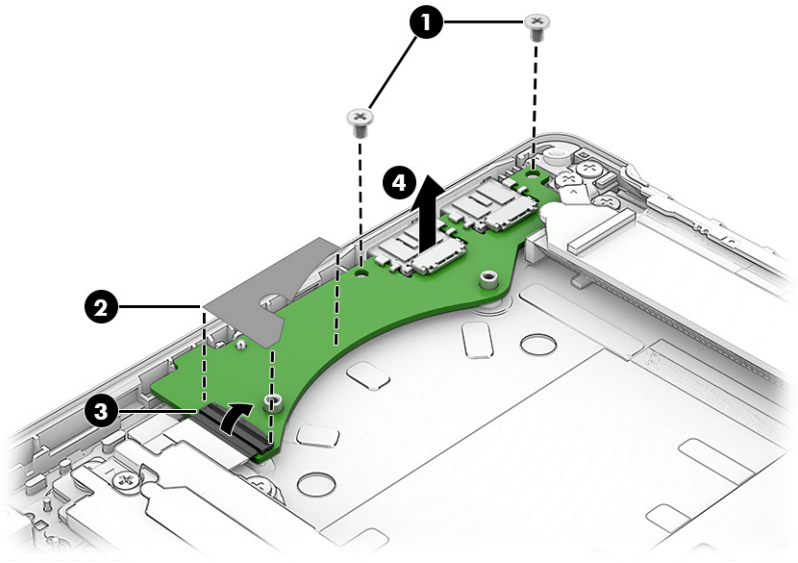

Reverse this procedure to install the USB board.

Infrared sensor board

Use this procedure to remove the infrared sensor board.

Table 6-6 Infrared sensor board description and part number

Description	Spare part number
Infrared sensor board	Q22518-001

Before removing the infrared sensor board, follow these steps:

1. Prepare the computer for disassembly (see Preparation for disassembly on page 28).
2. Remove the bottom cover (see Bottom cover on page 28).
3. Remove the battery (see Battery on page 31).
4. Remove the SSD (see Solid-state drive on page 36).
5. Remove the fans (see Fans on page 41).
6. Remove the heat sink (see Heat sink on page 39).
7. Remove the system board (see System board on page 46).

Remove the infrared sensor board:

1. Remove the Phillips M2.0 × 3.0 screw **(1)** that secures the board to the computer.
2. Disconnect the cable from the system board ZIF connector **(2)**.

3. Remove the board **(3)** from the computer.

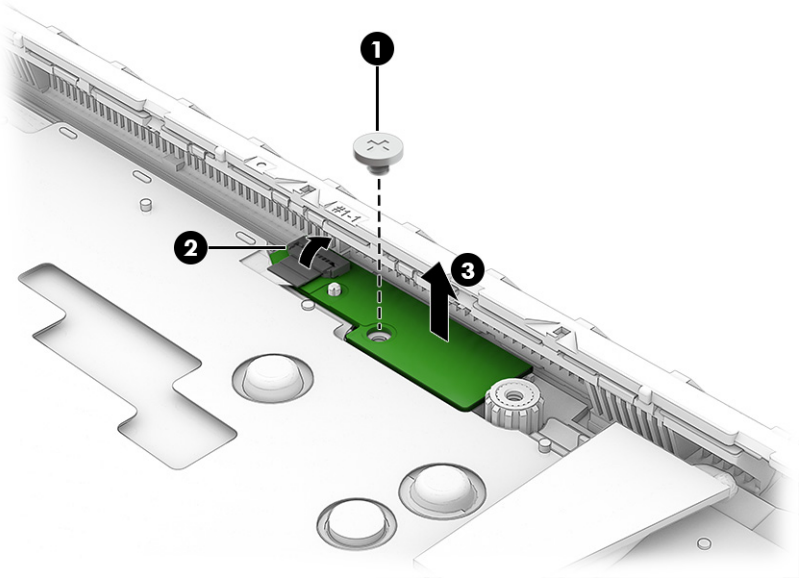

Reverse this procedure to install the infrared sensor board.

Touchpad

Use this procedure to remove the touchpad.

Table 6-7 Touchpad description and part number

Description	Spare part number
Touchpad	Q22522-001

Before removing the touchpad, follow these steps:

1. Prepare the computer for disassembly (see Preparation for disassembly on page 28).
2. Remove the bottom cover (see Bottom cover on page 28).
3. Remove the battery (see Battery on page 31).
4. Remove the SSD (see Solid-state drive on page 36).
5. Remove the fans (see Fans on page 41).
6. Remove the heat sink (see Heat sink on page 39).
7. Remove the system board (see System board on page 46).

Remove the touchpad:

1. Remove the four Phillips M2.0 × 3.0 screws **(1)** that secure the touchpad bracket to the computer.

2. Remove the touchpad bracket from the computer **(2)**.

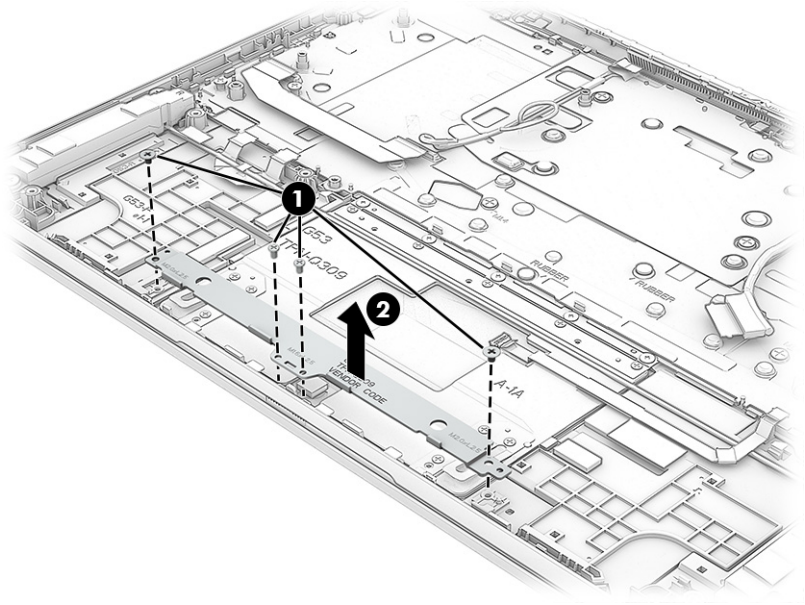

3. Lift the mylar cover **(1)**, then remove the conductive tape **(2)**.
4. Remove the five Phillips M2.0 × 3.0 screws **(3)** that secure the touchpad to the computer.
5. Disconnect the cable from the ZIF connector **(4)** on the touchpad.
6. Remove the touchpad **(5)** from the computer.

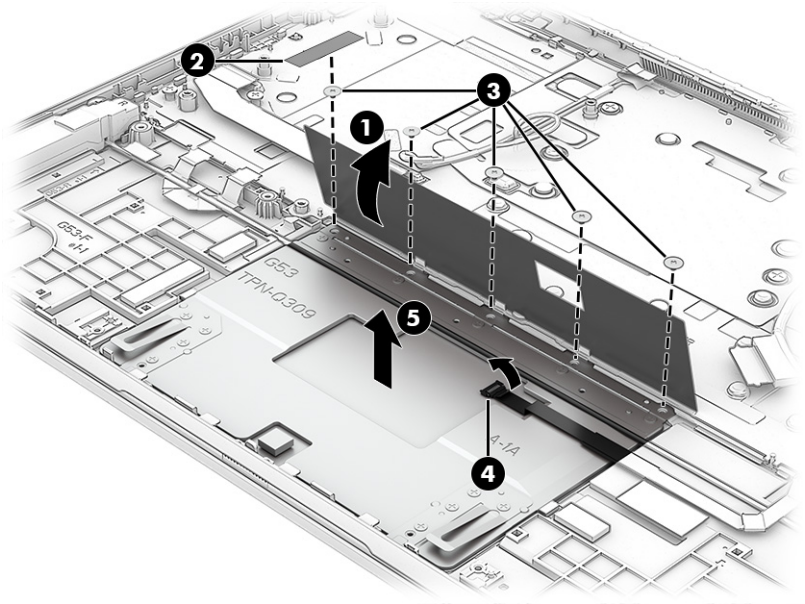

Reverse this procedure to install the touchpad.

System board

Use this procedure to remove the system board.

Table 6-8 System board descriptions and part numbers

Description	Spare part number
System board (includes processor):	
Snapdragon X675 Elite processor, 64GB unified memory	Q22511-601
Snapdragon X675 Elite processor, 32GB unified memory	Q32018-601
Snapdragon X650 Plus processor, 32GB unified memory	Q22510-601

Before removing the system board, follow these steps:

1. Prepare the computer for disassembly (see Preparation for disassembly on page 28).
2. Remove the bottom cover (see Bottom cover on page 28).
3. Remove the battery (see Battery on page 31).
4. Remove the SSD (see Solid-state drive on page 36).
5. Remove the fans (see Fans on page 41).
6. Remove the USB board (see USB board on page 43).
7. Remove the heat sink (see Heat sink on page 39).
8. Remove the infrared sensor board (see Infrared sensor board on page 44).

When you replace the system board, be sure to remove the following component (as applicable) from the defective system board and install it on the replacement system board:

- WLAN module (see WLAN module on page 38).

Remove the system board:

1. Disconnect the following cables from the system board:
   - Infrared sensor board cable (ZIF) **(1)**
   - Display cable **(2)**
   - Camera cable (ZIF) **(3)**
   - Speaker cable **(4)**
   - Touchpad cable (ZIF) **(5)**
   - Keyboard cable **(6)**
   - Keyboard backlight cable (ZIF) **(7)**
   - USB daughter board cable (ZIF) **(8)**
   - WLAN module cables **(9)**

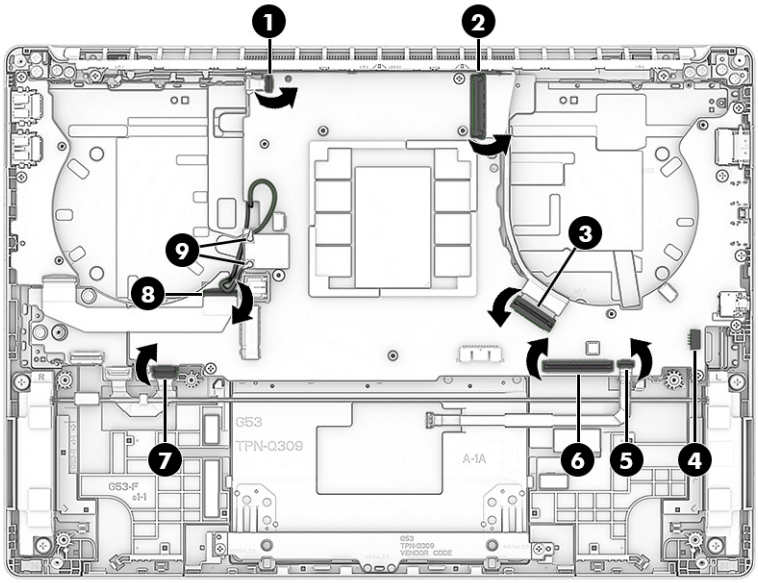

2. Remove the Phillips M2.0 × 5.0 screws that secure the system board to the computer.

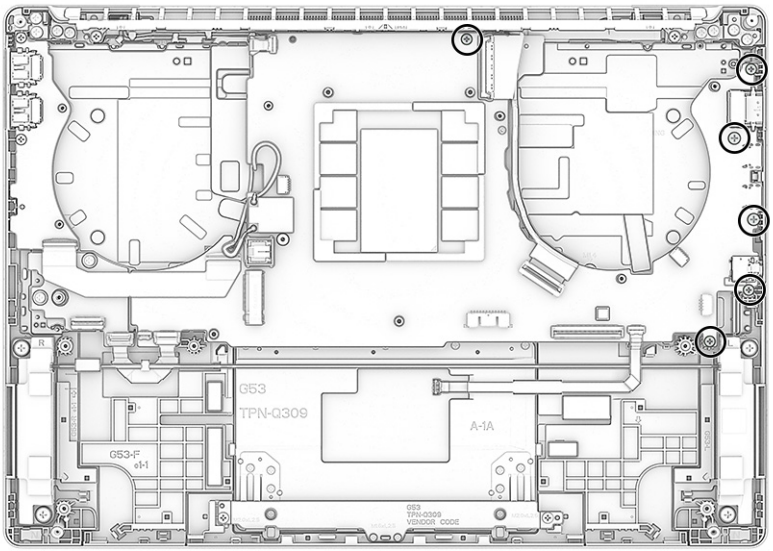

3. Tilt the system board away from the computer **(1)** at an angle and then gently pull away from the computer enclosure **(2)**.

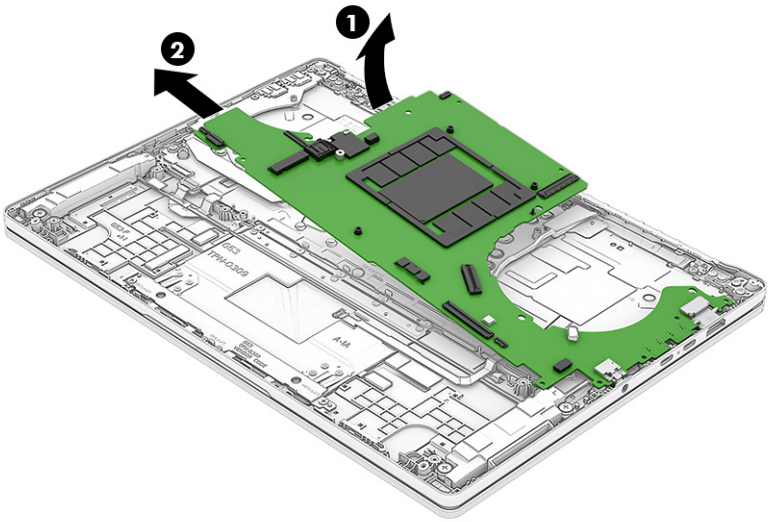

Reverse this procedure to install the system board.

Display assembly

Use this procedure to remove and disassemble the display assembly.

Full hinge-up displays are not available as spare parts. Spare parts for displays are available only at the subcomponent level.

Before removing the display panel, follow these steps:

1. Prepare the computer for disassembly (see Preparation for disassembly on page 28).
2. Remove the bottom cover (see Bottom cover on page 28).
3. Remove the battery (see Battery on page 31).
4. Remove the SSD (see Solid-state drive on page 36).
5. Remove the fans (see Fans on page 41).
6. Remove the USB board (see USB board on page 43).
7. Remove the heat sink (see Heat sink on page 39).
8. Remove the system board (see System board on page 46).

Remove the display assembly:

1. Disconnect the antenna cables from the WLAN module **(1)** and remove the display cable **(2)** from the retention clips.

2. Disconnect the display cable **(3)** and the camera cable **(4)**.

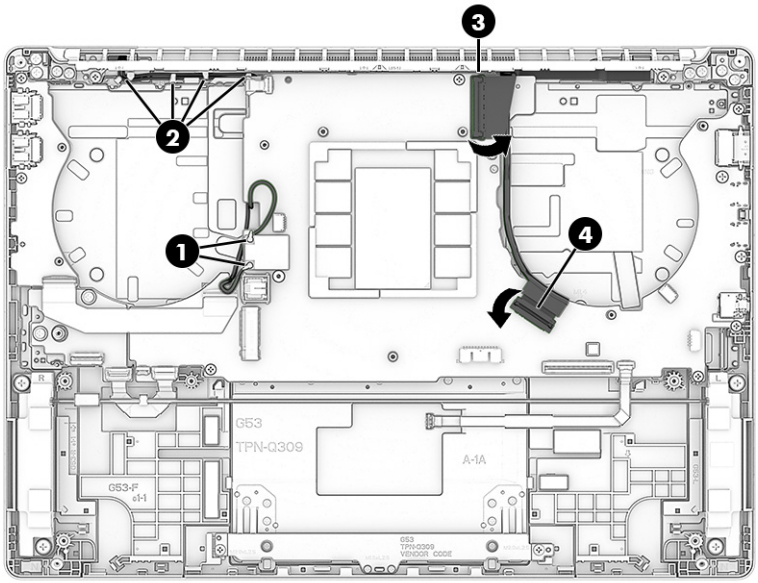

3. Remove the six Phillips M2.5 × 5.0 screws that secure the display assembly to the computer.

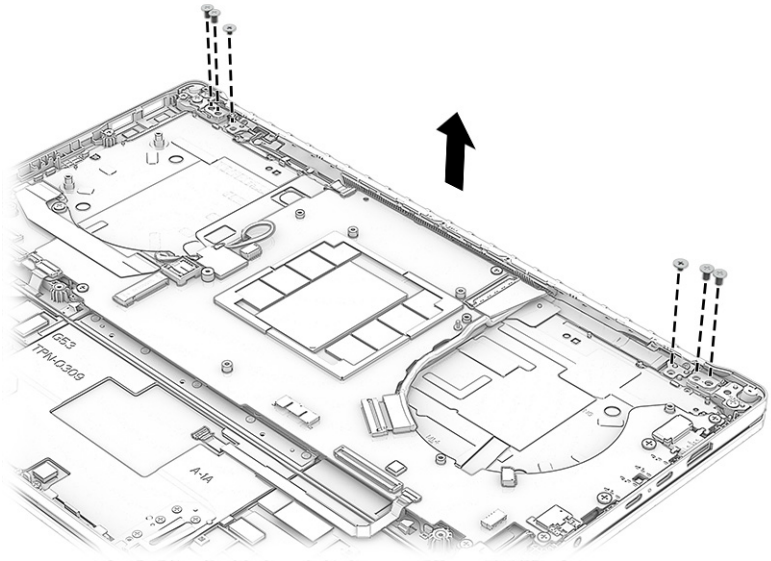

4. Rotate the display **(1)** to open the hinges, then separate the display assembly from the computer **(2)**.

⚠ **CAUTION:** To prevent damage to the computer, place the top cover of the computer (including the keyboard) on a flat surface with the display open, then remove the display with gentle pressure upward.

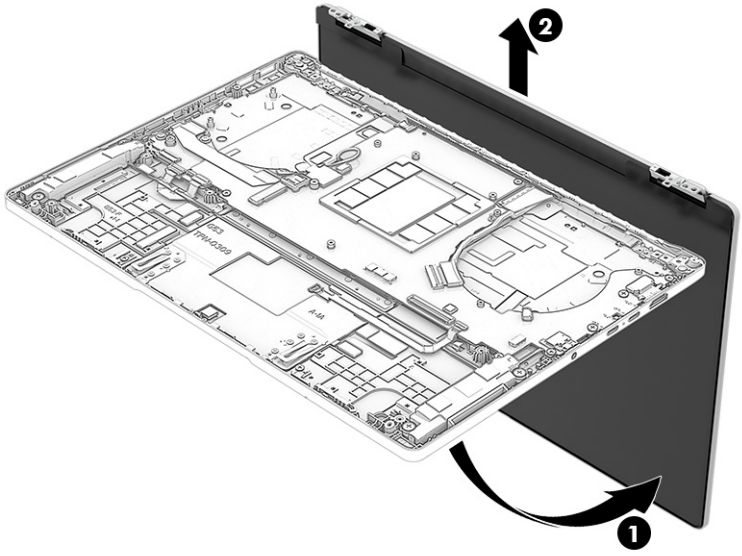

5. To replace display assembly subcomponents:

   a. With the computer closed, use a heat gun **(1)** on the sides of the panel to loosen the adhesive, then open the computer **(2)**.

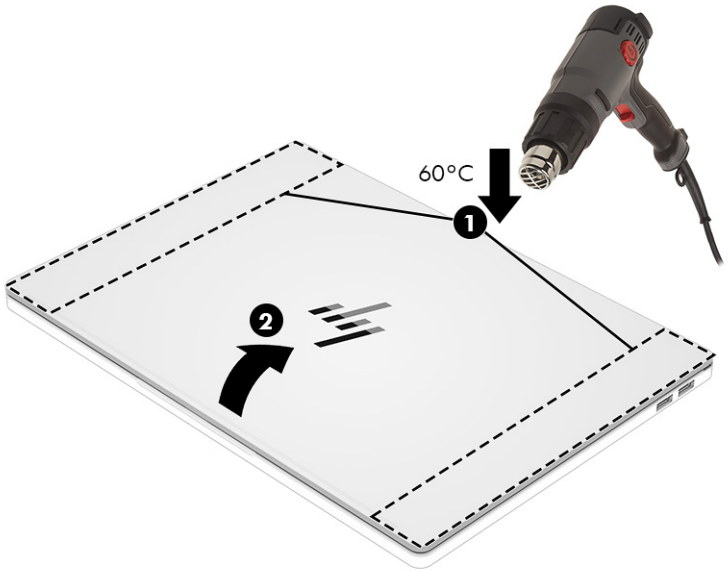

   b. Using a suction-cup reverse-clamp and a pry tool, separate the top of the panel from the back cover.

   c. The display panel is secured to the display enclosure with tape that is installed under the left and right sides of the panel. To remove the panel, use tweezers to grasp the end of the tape. While turning the tweezers, wrap the tape around the tweezers as you continue to pull the tape out from behind the display panel. You must pull the tape multiple times before it is completely removed.

   d. Remove the panel from the back cover.

e. The display panel is available as spare part number Q22512-001 and includes the display panel cable.



NOTE: When replacing the touch control board or display panel, be sure to update the touch firmware, available on the HP product support page.

6. To remove the hinges from the display assembly:

   a. Close the hinges, then remove the four Phillips broadhead M2.0 × 2.0 screws **(1)** from each hinge.

   b. On the right side of the display assembly only, slide the hinge **(2)** toward the outside of the computer.

   c. Remove the hinges **(3)** from the display assembly.

   The display hinges are available as spare part number Q22526-001. Hinge caps are available as spare part number Q22527-001.

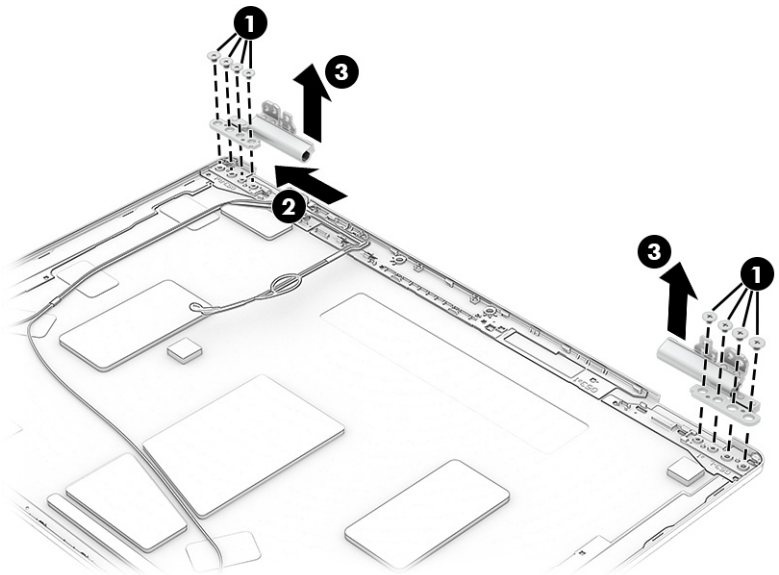

7. To remove the camera module:

   a. Remove or peel back the adhesive tape covering the camera module.

   b. Rotate the camera module ninety degrees **(1)** and peel the module up from the display back cover, and then disconnect the cable from the reverse ZIF connector **(2)** on the module.

   c. Lift the camera module away from the panel **(3)**. The camera module is available as spare part number Q22528-001.

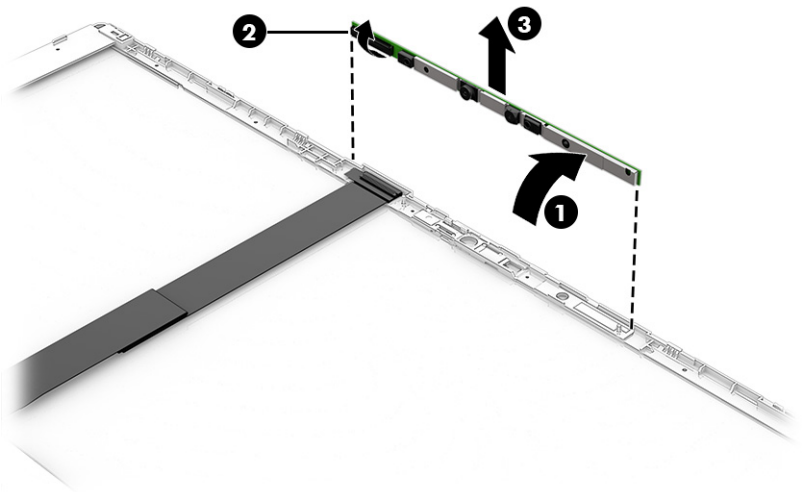

8. To remove the display/camera cables or touch control board, first remove the mylar cover **(1)** from the display cable, then disconnect the display cable **(2)** from the back cover.

9. Disconnect the remaining cables from the touch control board **(3), (4), (5)**, then remove the camera cable **(6)**.

   The touch control board is available as spare part number Q22525-001.

NOTE: When replacing the touch control board or display panel, be sure to update the touch firmware, available on the HP product support page.

Display panel cables are available as the following spare part numbers:

Q22514-001: display panel cable only

Q22515-001: display panel cable kit including WLAN antenna

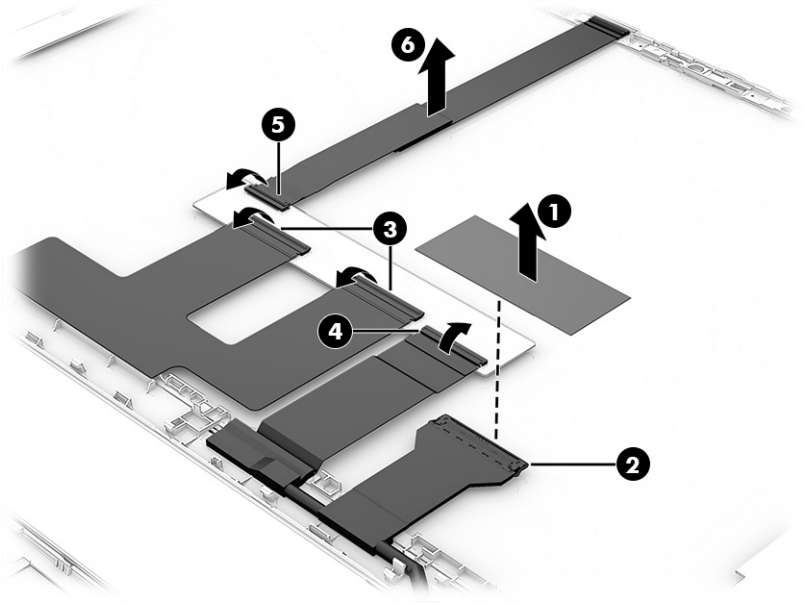

10. To remove the antenna cables, remove the antenna cables from the hinge assembly **(1)**, remove the tape **(2)** adhering the cables to the back cover, and then remove the antennas and cables **(3)**.

    Antenna cables are included in the following spare part numbers:

    - Cable kit and antenna: Q22515-001
    - Back cover with antenna: Q22524-001

    The display back cover is available as spare part number Q22524-001.

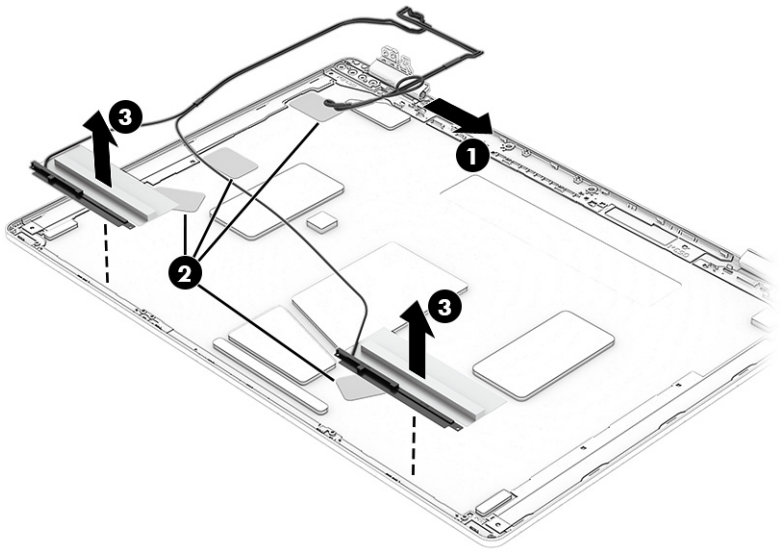

Reverse this procedure to reassemble and replace the display assembly.

Keyboard with top cover

The top cover with keyboard remains after removing all other spare parts from the computer. In this section, the first table provides the main spare part numbers for the top cover with keyboards. The second table provides the country codes.

Table 6-9 Keyboard with top cover descriptions and part numbers

Description	Spare part number
Stormy grey, backlit	Q22513-001
Stormy grey, backlit, French Canada	Q22513-DB1

Table 6-10 Spare part country codes

For use in country or region	Spare part number	For use in country or region	Spare part number	For use in country or region	Spare part number
Belgium	-A41	Iceland	-DD1	Saudi Arabia	-171
Brazil	-201	India	-D61	Slovenia	-BA1
Bulgaria	-261	Israel	-BB1	South Korea	-AD1
Chile	-161	Italy	-061	Spain	-071
Czech Republic/Slovakia	-FL1	Japan	-291	Switzerland	-BG1
Denmark, Finland, and Norway	-DH1	Kazakhstan	-DF1	Taiwan	-AB1
French Canada	-DB1	The Netherlands	-B31	Thailand	-281
France	-051	Northern Africa	-FP1	Turkey	-141
Germany	-041	Portugal	-131	Ukraine	-BD1
Greece	-151	Romania	-271	United Kingdom	-031
Hungary	-211	Russia	-251	United States	-001

7 Using Setup Utility (BIOS)

Setup Utility, or Basic Input/Output System (BIOS), controls communication between all the input and output devices on the system (such as disk drives, display, keyboard, mouse, and printer). Setup Utility (BIOS) includes settings for the types of devices installed, the startup sequence of the computer, and the amount of system and extended memory.

NOTE: To start Setup Utility on convertible computers, your computer must be in notebook mode and you must use the keyboard attached to your notebook.

Starting Setup Utility (BIOS)

You have several ways to access the Setup Utility (BIOS).

IMPORTANT: Use extreme care when making changes in Setup Utility (BIOS). Errors can prevent the computer from operating properly.

Use one of these options:

- Turn on or restart the computer and quickly press f10.
- Turn on or restart the computer, quickly press esc, and then press f10 when the Start menu is displayed.

Updating Setup Utility (BIOS)

Updated versions of Setup Utility (BIOS) might be available on the HP website. Most BIOS updates on the HP website are packaged in compressed files called *SoftPaqs*. Some download packages contain a file named `Readme.txt`, which contains information regarding installing and troubleshooting the file.

NOTE: On select products, when an update to the BIOS is performed using a Softpaq, HP CMSL or Windows Update, the installation process copies files to the EFI partition on the operating system storage device. The EFI partition must be ≥300 MB for this process to successfully complete. If not using the HP image from the factory, users need to create an EFI partition ≥300 MB when installing the operating system.

Determining the BIOS version

To decide whether you need to update Setup Utility (BIOS), first determine the BIOS version on your computer.

To reveal the BIOS version information (also known as *ROM date* and *System BIOS*), use one of these options.

- HP Support Assistant

  1. Perform one of these tasks:

     – Select the **Search** icon in the taskbar, type `support` in the search box, and then select the **HP Support Assistant** app.

– Select the question mark icon in the taskbar.

2. Under **My notebook**, select **Specifications**.

- Setup Utility (BIOS)

1. Start Setup Utility (BIOS) (see Starting Setup Utility (BIOS) on page 56).
2. Select **Main**, and then make note of the BIOS version.
3. Select **Exit**, select one of the options, and then follow the on-screen instructions.

- In Windows, press ctrl+alt+s.

To check for later BIOS versions, see Preparing for a BIOS update on page 57.

Preparing for a BIOS update

Be sure to follow all prerequisites before downloading and installing a BIOS update.

IMPORTANT: To reduce the risk of damage to the computer or an unsuccessful installation, download and install a BIOS update only when the computer is connected to reliable external power using the HP AC adapter provided with the computer (select products only), a replacement AC adapter provided by HP, or an AC adapter with the power rating specified on the product label. Do not download or install a BIOS update while the computer is running on battery power, docked in an optional docking device, or connected to an optional power source. During the download and installation, follow these instructions:

- Do not disconnect power from the computer by unplugging the power cord from the AC outlet.
- Do not shut down the computer or initiate Sleep.
- Do not insert, remove, connect, or disconnect any device, cable, or cord.

NOTE: If your computer is connected to a network, consult the network administrator before installing any software updates, especially system BIOS updates.

Downloading a BIOS update

After you review the prerequisites, you can check for and download BIOS updates.

1. Perform one of these tasks:
   - Select the **Search** icon in the taskbar, type `support` in the search box, and then select the **HP Support Assistant** app.
   - Select the question mark icon in the taskbar.
2. Select **Updates**. The **Checking for Updates** window opens, and Windows checks for updates.
3. Follow the on-screen instructions.
4. At the download area, follow these steps:
   a. Identify the most recent BIOS update and compare it to the BIOS version currently installed on your computer. If the update is more recent than your BIOS version, make a note of the date, name, or other identifier. You might need this information to locate the update later, after it has been downloaded to your storage device.

b. Follow the on-screen instructions to download your selection to the storage device.

   Make a note of the path to the location on your storage device where the BIOS update is downloaded. You will need to access this path when you are ready to install the update.

Installing a BIOS update

BIOS installation procedures vary. Follow any instructions that appear on the screen after the download is complete. If no instructions appear, follow these steps.

NOTE: On select products, when an update to the BIOS is performed using a Softpaq, HP CMSL or Windows Update, the installation process copies files to the EFI partition on the operating system storage device. The EFI partition must be ≥300 MB for this process to successfully complete. If not using the HP image from the factory, users need to create an EFI partition ≥300 MB when installing the operating system.

1. Select the **Search** icon in the taskbar, type `file` in the search box, and then select **File Explorer**.
2. Select your storage device designation. The storage device designation is typically Local Disk (C:).
3. Using the storage device path you recorded earlier, open the folder that contains the update.
4. Double-click the file that has an .exe extension (for example, *filename*.exe).

   The BIOS installation begins.
5. Complete the installation by following the on-screen instructions.

NOTE: After a message on the screen reports a successful installation, you can delete the downloaded file from your storage device.

8 Computer Setup (BIOS), TPM, and HP Sure Start

HP provides several tools to help set up and protect your computer.

Using Computer Setup

Computer Setup, or Basic Input/Output System (BIOS), controls communication between all the input and output devices on the system (such as hard drives, display, keyboard, mouse, and printer). Computer Setup includes settings for types of devices installed, the startup sequence of the computer, and amount of system and extended memory.

NOTE: Use extreme care when making changes in Computer Setup. Errors can prevent the computer from operating properly.

To start Computer Setup, turn on or restart the computer, and when the HP logo appears, press f10 to enter Computer Setup.

Navigating and selecting in Computer Setup

You can navigate and select in Computer Setup using one or more methods.

- To select a menu or a menu item, use the tab key and the keyboard arrow keys and then press enter, or use a pointing device to select the item.
- To scroll up and down, select the up arrow or the down arrow in the upper-right corner of the screen, or use the up arrow key or the down arrow key on the keyboard.
- To close open dialog boxes and return to the main Computer Setup screen, press esc, and then follow the on-screen instructions.

To exit Computer Setup, choose one of the following methods:

- To exit Computer Setup menus without saving your changes, select **Main**, select **Ignore Changes and Exit**, and then select **Yes**.

NOTE: If you are using arrow keys to highlight your choice, you must then press enter.

- To save your changes and exit Computer Setup menus, select **Main**, select **Save Changes and Exit**, and then select **Yes**.

NOTE: If you are using arrow keys to highlight your choice, you must then press enter.

Your changes go into effect when the computer restarts.

Restoring factory settings in Computer Setup

To return all settings in Computer Setup to the values that were set at the factory, follow these steps.

NOTE: Restoring defaults will not change the hard drive mode.

1. Start Computer Setup. See Using Computer Setup on page 59.
2. Select **Main**, select **Apply Factory Defaults and Exit**, and then select **Yes**.

NOTE: If you are using arrow keys to highlight your choice, you must then press enter.

NOTE: On select products, the selections might display **Restore Defaults** instead of **Apply Factory Defaults and Exit**.

Your changes go into effect when the computer restarts.

NOTE: Your password settings and security settings are not changed when you restore the factory settings.

Updating the BIOS

Updated versions of the BIOS might be available on the HP website. Most BIOS updates on the HP website are packaged in compressed files called *SoftPaqs*.

NOTE: On select products, when an update to the BIOS is performed using a Softpaq, HP CMSL or Windows Update, the installation process copies files to the EFI partition on the operating system storage device. The EFI partition must be ≥300 MB for this process to successfully complete. If not using the HP image from the factory, users need to create an EFI partition ≥300 MB when installing the operating system.

Some download packages contain a file named Readme.txt, which contains information regarding installing and troubleshooting the file.

Determining the BIOS version

To decide whether you need to update Computer Setup (BIOS), first determine the BIOS version on your computer.

If you are already in Windows, you can access BIOS version information (also known as *ROM date* and *System BIOS*) by pressing fn+esc (select products only). Or you can use Computer Setup.

1. Start Computer Setup. See Using Computer Setup on page 59.
2. Select **Main**, and then select **System Information**.
3. To exit Computer Setup menus without saving your changes, select **Main**, select **Ignore Changes and Exit**, and then select **Yes**.

NOTE: If you are using arrow keys to highlight your choice, you must then press enter.

To check for later BIOS versions, see Preparing for a BIOS update on page 60.

Preparing for a BIOS update

Be sure to follow all prerequisites before downloading and installing a BIOS update.

IMPORTANT: To reduce the risk of damage to the computer or an unsuccessful installation, download and install a BIOS update only when the computer is connected to the following types of reliable external power:

- The HP AC adapter provided with the computer (select products only)

- A replacement AC adapter provided by HP
- An AC adapter with the power rating specified on the product label

Do not download or install a BIOS update while the computer is operating under these circumstances:

- Running on battery power
- Docked in an optional docking device
- Connected to an optional docking power source

During the download and installation, follow these instructions:

- Do not disconnect power on the computer by unplugging the power cord from the AC outlet.
- Do not shut down the computer or initiate Sleep.
- Do not insert, remove, connect, or disconnect any device, cable, or cord.

Downloading a BIOS update

After you review the prerequisites, you can check for and download BIOS updates.

1. Perform one of these tasks:
   - Select the **Search** icon in the taskbar, type `support` in the search box, and then select the **HP Support Assistant** app.
   - Select the question mark icon (select products only) in the taskbar.
2. Select **Updates**, and then select **Check for updates and messages**.
3. Follow the on-screen instructions.
4. At the download area, follow these steps:
   a. Identify the most recent BIOS update and compare it to the BIOS version currently installed on your computer. Make a note of the date, name, or other identifier. You might need this information to locate the update later, after it has been downloaded to your hard drive.
   b. Follow the on-screen instructions to download your selection to the hard drive.

      Make a note of the path to the location on your hard drive where the BIOS update is downloaded. You will need to access this path when you are ready to install the update.

NOTE: If you connect your computer to a network, consult the network administrator before installing any software updates, especially system BIOS updates.

Installing a BIOS update

BIOS installation procedures vary. Follow any instructions that are displayed on the screen after the download is complete. If no instructions are displayed, follow these steps.

NOTE: On select products, when an update to the BIOS is performed using a Softpaq, HP CMSL or Windows Update, the installation process copies files to the EFI partition on the operating system storage device. The EFI partition must be ≥300 MB for this process to successfully complete. If not using the HP image from the factory, users need to create an EFI partition ≥300 MB when installing the operating system.

1. Select the **Search** icon in the taskbar, type `file` in the search box, and then select **File Explorer**.
2. Select your hard drive designation. The hard drive designation is typically Local Disk (C:).
3. Using the hard drive path you recorded earlier, open the folder that contains the update.
4. Double-click the file that has an .exe extension (for example, *filename*.exe).

   The BIOS installation begins.
5. Complete the installation by following the on-screen instructions.

NOTE: After a message on the screen reports a successful installation, you can delete the downloaded file from your hard drive.

Changing the boot order using the f9 prompt

To dynamically choose a boot device for the current startup sequence, follow these steps.

1. Access the Boot Device Options menu:
   - Turn on or restart the computer, and when the HP logo appears, press f9 to enter the Boot Device Options menu.
2. Select a boot device, press enter, and then follow the on-screen instructions.

TPM BIOS settings (select products only)

Trusted Platform Module (TPM) provides additional security for your computer. You can modify the TPM settings in Computer Setup (BIOS).

IMPORTANT: Before enabling TPM functionality on this system, you must ensure that your intended use of TPM complies with relevant local laws, regulations and policies, and approvals or licenses must be obtained if applicable. For any compliance issues arising from your operation or usage of TPM that violates the previously mentioned requirement, you shall bear all the liabilities wholly and solely. HP will not be responsible for any related liabilities.

NOTE: If you change the TPM setting to Hidden, TPM is not visible in the operating system.

To access TPM settings in Computer Setup:

1. Start Computer Setup. See Using Computer Setup on page 59.
2. Select **Security**, select **TPM Embedded Security**, and then follow the on-screen instructions.

Using HP Sure Start (select products only)

Select computer models are configured with HP Sure Start, a technology that monitors the computer's BIOS for attacks or corruption. If the BIOS becomes corrupted or is attacked, HP Sure Start automatically restores the BIOS to its previously safe state, without user intervention.

HP Sure Start is configured and already enabled so that most users can use the HP Sure Start default configuration. Advanced users can customize the default configuration.

To access the latest documentation on HP Sure Start, go to http://www.hp.com/support. Select **Find your product**, and then follow the on-screen instructions.

9 Backing up, restoring, and recovering

You can use Windows tools or HP software to back up your information, create a restore point, reset your computer, create recovery media, or restore your computer to its factory state. Performing these standard procedures can return your computer to a working state faster.

IMPORTANT: If you are performing recovery procedures on a tablet, the tablet battery must be at least 70% charged before you start the recovery process.

IMPORTANT: For a tablet with a detachable keyboard, connect the tablet to the keyboard base before beginning any recovery process.

Backing up information and creating recovery media

These methods of creating recovery media and backups are available on select products only.

Using Windows tools for backing up

HP recommends that you back up your information immediately after initial setup. You can do this task either using Windows Backup locally with an external USB flash drive or using online tools.

NOTE: If computer storage is 32 GB or less, Microsoft System Restore is disabled by default.

Using the HP Cloud Recovery Download Tool to create a recovery USB flash drive (select products only)

You can use the HP Cloud Recovery Download Tool to create an HP Recovery bootable USB flash drive.

For details:

- Go to http://www.hp.com, search for HP Cloud Recovery, and then select the result that matches the type of computer that you have and follow the on-screen instructions.

NOTE: In select countries, if you cannot create the HP Recovery USB flash drive yourself, contact support. Go to http://www.hp.com/support, select your country or region, and then follow the on-screen instructions.

IMPORTANT: HP recommends that you follow the Restoring and recovery methods on page 64 to restore your computer before you obtain and use the HP USB flash drive. Using a recent backup can return your machine to a working state sooner than using the HP USB flash drive. After the system is restored, reinstalling all the operating system software released since your initial purchase can be a lengthy process.

Restoring and recovering your system

You have several tools available to recover your system both within and outside of Windows if the desktop cannot load.

HP recommends that you attempt to restore your system using the Restoring and recovery methods on page 64.

Creating a system restore

System Restore is available in Windows. The System Restore software can automatically or manually create restore points, or snapshots, of the system files and settings on the computer at a particular point.

When you use System Restore, it returns your computer to its state at the time you made the restore point. Your personal files and documents should not be affected.

Restoring and recovery methods

After you run the first method, test to see whether the issue still exists before you proceed to the next method, which might now be unnecessary.

1. Run a Microsoft System Restore.
2. Run Reset this PC.

NOTE: The options **Remove everything** and then **Fully clean the drive** can take several hours to complete and leave no information on your computer. It is the safest way to reset your computer before you recycle it.

3. Recover using the HP Recovery USB flash drive. For more information, see Recovering using the HP Recovery USB flash drive on page 64.

For more information about the first two methods, see the Get Help app:

- Select the **Start** button, select **All apps**, select the **Get Help** app, and then enter the task you want to perform.

NOTE: You must be connected to the internet to access the Get Help app.

Recovering using the HP Recovery USB flash drive

You can use the HP Recovery USB flash drive to recover the operating system and drivers that were installed at the factory. On select products, you can create recovery media on a bootable USB flash drive using the HP Cloud Recovery Download Tool.

For details, see Using the HP Cloud Recovery Download Tool to create a recovery USB flash drive (select products only) on page 63.

NOTE: In select countries, if you cannot create the HP Recovery USB flash drive yourself, contact support. Go to http://www.hp.com/support, select your country or region, and then follow the on-screen instructions.

To recover your system:

- Insert the HP Recovery USB flash drive, and then restart the computer.

NOTE: HP recommends that you follow the Restoring and recovery methods on page 64 to restore your computer before you obtain and use the HP USB flash drive. Using a recent backup can return your machine to a working state sooner than using the HP USB flash drive. After the system is restored, reinstalling all the operating system software released since your initial purchase can be a lengthy process.

Changing the computer boot order

If your computer does not restart using the HP Recovery USB flash drive, you can change the computer boot order, which is the order of devices listed in BIOS for startup information.

IMPORTANT: For a tablet with a detachable keyboard, connect the tablet to the keyboard base before beginning these steps.

To change the boot order:

1. Insert the HP Recovery USB flash drive.
2. Access the system **Startup** menu.
   - For computers or tablets with keyboards attached, turn on or restart the computer or tablet, quickly press esc, and then press f9 for boot options.
   - For tablets without keyboards, turn on or restart the tablet, and then quickly press and hold one of the following buttons:
     - Volume up
     - Volume down

     Then select **f9**.
3. Select the USB flash drive to boot from, and then follow the on-screen instructions.

Using HP Sure Recover (select products only)

Select computer models are configured with HP Sure Recover, a PC operating system (OS) recovery solution built into the hardware and software. HP Sure Recover can fully restore the HP OS image without installed recovery software.

Using HP Sure Recover, an administrator or user can restore the system and install:

- Latest version of the OS
- Platform-specific device drivers
- Software applications, in the case of a custom image

To access the latest documentation for HP Sure Recover, go to http://www.hp.com/support. Follow the on-screen instructions to find your product and locate your documentation.

10 Using HP PC Hardware Diagnostics

You can use the HP PC Hardware Diagnostics utility to determine whether your computer hardware is running properly. The three versions are HP PC Hardware Diagnostics Windows, HP PC Hardware Diagnostics UEFI (Unified Extensible Firmware Interface), and (for select products only) Remote HP PC Hardware Diagnostics UEFI, a firmware feature.

Using HP PC Hardware Diagnostics Windows (select products only)

HP PC Hardware Diagnostics Windows is a Windows-based utility that allows you to run diagnostic tests to determine whether the computer hardware is functioning properly. The tool runs within the Windows operating system to diagnose hardware failures.

If HP PC Hardware Diagnostics Windows is not installed on your computer, you must download and install it. To download HP PC Hardware Diagnostics Windows, see Downloading HP PC Hardware Diagnostics Windows on page 67.

Using an HP PC Hardware Diagnostics Windows hardware failure ID code

When HP PC Hardware Diagnostics Windows detects a failure that requires hardware replacement, a 24-digit failure ID code is generated for select component tests. For interactive tests, such as keyboard, mouse, or audio and video palette, you must perform troubleshooting steps before you can receive a failure ID.

You have several options after you receive a failure ID:

- Select **Next** to open the Event Automation Service (EAS) page, where you can log the case.
- Scan the QR code with your mobile device, which takes you to the EAS page, where you can log the case.
- Select the box next to the 24-digit failure ID to copy your failure code and send it to support.

Accessing HP PC Hardware Diagnostics Windows

After HP PC Hardware Diagnostics Windows is installed, you can access it from HP Support Assistant or the Start menu.

Accessing HP PC Hardware Diagnostics Windows from HP Support Assistant (select products only)

After HP PC Hardware Diagnostics Windows is installed, follow these steps to access it from HP Support Assistant.

1. Complete one of the following tasks:
   - Select the **Search** icon in the taskbar, type `support` in the search box, and then select the **HP Support Assistant** app.
   - Select the question mark icon in the taskbar.

2. Select **Fixes & Diagnostics**.
3. Select **Run hardware diagnostics**, and then select **Launch**.
4. When the tool opens, select the type of diagnostic test that you want to run, and then follow the on-screen instructions.

NOTE: To stop a diagnostic test, select **Cancel**.

Accessing HP PC Hardware Diagnostics Windows from the Start menu (select products only)

After HP PC Hardware Diagnostics Windows is installed, follow these steps to access it from the Start menu.

1. Select the **Start** button, and then select **All apps**.
2. Select **HP PC Hardware Diagnostics Windows**.
3. When the tool opens, select the type of diagnostic test that you want to run, and then follow the on-screen instructions.

NOTE: To stop a diagnostic test, select **Cancel**.

Downloading HP PC Hardware Diagnostics Windows

The HP PC Hardware Diagnostics Windows downloading instructions are provided in English only. You must use a Windows computer to download this tool because only .exe files are provided.

Downloading the latest HP PC Hardware Diagnostics Windows version from HP

To download HP PC Hardware Diagnostics Windows from HP, follow these steps.

1. Go to http://www.hp.com/go/techcenter/pcdiags. The HP PC Diagnostics home page is displayed.
2. Select **Diagnose PC Hardware issues in Windows**, scroll down to the expanded window that appears, and then select **Download**.
3. A pop-up that asks what you want to do with the file opens. Select **Open** or **Save As**. The latest version of the diagnostics tool opens or downloads to the selected location.

Downloading the HP PC Hardware Diagnostics Windows from the Microsoft Store

You can download the HP PC Hardware Diagnostics Windows from the Microsoft Store.

1. Select the Microsoft Store app on your desktop or select the **Search** icon in the taskbar, and then type `Microsoft Store` in the search box.
2. Type `HP PC Hardware Diagnostics Windows` in the **Microsoft Store** search box.
3. Follow the on-screen directions.

The tool downloads to the selected location.

Downloading HP Hardware Diagnostics Windows by product name or number (select products only)

You can download HP PC Hardware Diagnostics Windows by product name or number.

NOTE: For some products, you might have to download the software to a USB flash drive by using the product name or number.

1. Go to http://www.hp.com/support.
2. Select **Software and Drivers**, select your type of product, and then enter the product name or number in the search box that is displayed.
3. In the **Diagnostics** section, select **Download**, and then follow the on-screen instructions to select the specific Windows diagnostics version to be downloaded to your computer or USB flash drive.

The tool downloads to the selected location.

Installing HP PC Hardware Diagnostics Windows

To install HP PC Hardware Diagnostics Windows, navigate to the folder on your computer or the USB flash drive where the .exe file downloaded, double-click the .exe file, and then follow the on-screen instructions.

Using HP PC Hardware Diagnostics UEFI

HP PC Hardware Diagnostics Unified Extensible Firmware Interface (UEFI) allows you to run diagnostic tests to determine whether the computer hardware is functioning properly. The tool runs outside the operating system so that it can isolate hardware failures from issues that are caused by the operating system or other software components.

NOTE: For some products, you must use a Windows computer and a USB flash drive to download and create the HP UEFI support environment because only .exe files are provided. For more information, see Downloading HP PC Hardware Diagnostics UEFI to a USB flash drive on page 69.

If your PC does not start in Windows, you can use HP PC Hardware Diagnostics UEFI to diagnose hardware issues.

Using an HP PC Hardware Diagnostics UEFI hardware failure ID code

When HP PC Hardware Diagnostics UEFI detects a failure that requires hardware replacement, a 24-digit failure ID code is generated.

For assistance in solving the problem, complete one of these tasks:

- Select **Contact HP**, accept the HP privacy disclaimer, and then use a mobile device to scan the failure ID code that appears on the next screen. The HP Customer Support - Service Center page appears with your failure ID and product number automatically filled in. Follow the on-screen instructions.
- Contact support, and provide the failure ID code.

Starting HP PC Hardware Diagnostics UEFI

To start HP PC Hardware Diagnostics UEFI, follow this procedure.

1. Turn on or restart the computer, and quickly press esc.

2. Press f2.

   The BIOS searches three places for the diagnostic tools, in the following order:

   a. Connected USB flash drive

   NOTE: To download the HP PC Hardware Diagnostics UEFI tool to a USB flash drive, see Downloading the latest HP PC Hardware Diagnostics UEFI version on page 70.

   b. Hard drive

   c. BIOS

3. When the diagnostic tool opens, select the type of diagnostic test that you want to run, and then follow the on-screen instructions.

Starting HP PC Hardware Diagnostics UEFI through HP Hotkey Support software (select products only)

This section describes how to start HP PC Hardware Diagnostics UEFI through HP Hotkey Support software.

NOTE: You must disable Fast Boot to access HP PC Hardware Diagnostics UEFI from the HP System Information application.

To disable Fast Boot:

1. Turn on or restart the computer, and when the HP logo appears, press f10 to enter Computer Setup.
2. Select **Advanced**, and then select **Boot Options**.
3. Clear **Fast Boot**.
4. Select **Save Changes and Exit**, and then select **Yes**.

To start HP PC Hardware Diagnostics UEFI through HP Hotkey Support software, follow this procedure:

1. From the **Start** menu, open the HP System Information Application or press fn+esc.
2. In the HP System Information screen, select **Run System Diagnostics**, select **Yes** to run the application, and then select **Restart**.

IMPORTANT: To prevent loss of data, save your work in all open apps before restarting your computer.

NOTE: When the restart is complete, the computer opens the HP PC Hardware Diagnostics UEFI Application. Proceed with the troubleshooting tests.

Downloading HP PC Hardware Diagnostics UEFI to a USB flash drive

Downloading HP PC Hardware Diagnostics UEFI to a USB flash drive can be useful in some situations.

- HP PC Hardware Diagnostics UEFI is not included in the preinstallation image.
- HP PC Hardware Diagnostics UEFI is not included in the HP Tool partition.

- The storage device is damaged.

NOTE: The HP PC Hardware Diagnostics UEFI downloading instructions are provided in English only, and you must use a Windows computer to download and create the HP UEFI support environment because only `.exe` files are provided.

Downloading the latest HP PC Hardware Diagnostics UEFI version

To download the latest HP PC Hardware Diagnostics UEFI version to a USB flash drive, follow these steps.

1. Go to http://www.hp.com/go/techcenter/pcdiags. The HP PC Diagnostics home page is displayed.
2. Select **Diagnose PC Hardware Issues outside of the OS**, scroll down to the expanded window that appears, and then select **Download**.
3. A pop-up that asks what you want to do with the file opens. Select **Open** or **Save As**. The latest version of the diagnostics tool opens or downloads to the selected location.

Downloading HP PC Hardware Diagnostics UEFI by product name or number (select products only)

You can download HP PC Hardware Diagnostics UEFI by product name or number (select products only) to a USB flash drive.

NOTE: For some products, you might have to download the software to a USB flash drive by using the product name or number.

1. Go to http://www.hp.com/support.
2. Enter the product name or number, select your computer, and then select your operating system.
3. In the **Diagnostics** section, follow the on-screen instructions to select and download the specific UEFI Diagnostics version for your computer.

Using Remote HP PC Hardware Diagnostics UEFI settings (select products only)

Remote HP PC Hardware Diagnostics UEFI is a firmware (BIOS) feature that downloads HP PC Hardware Diagnostics UEFI to your computer. It can then run the diagnostics on your computer, and it might upload results to a preconfigured server.

For more information about Remote HP PC Hardware Diagnostics UEFI, go to http://www.hp.com/go/techcenter/pcdiags, select **Diagnose Other Potential Issues**, scroll down to **Remote PC Hardware Diagnostics UEFI**, and then select **Learn More**.

Downloading Remote HP PC Hardware Diagnostics UEFI

Remote HP PC Hardware Diagnostics UEFI is also available as a SoftPaq that you can download to a server.

Downloading the latest Remote HP PC Hardware Diagnostics UEFI version

You can download the latest Remote HP PC Hardware Diagnostics UEFI version to a USB flash drive.

1. Go to http://www.hp.com/go/techcenter/pcdiags. The HP PC Diagnostics home page is displayed.

2. Select **Diagnose PC Hardware Issues outside of the OS**, scroll down to the expanded window that appears, and then select **Download**.

3. A pop-up asks what you want to do with the file. Select **Open** or **Save As**. The latest version of the diagnostics tool opens or downloads to the selected location.

Downloading Remote HP PC Hardware Diagnostics UEFI by product name or number

You can download Remote HP PC Hardware Diagnostics UEFI by product name or number.

NOTE: For some products, you might have to download the software by using the product name or number.

1. Go to http://www.hp.com/support.

2. Select **Software and Drivers**, select your type of product, enter the product name or number in the search box that is displayed, select your computer, and then select your operating system.

3. In the **Diagnostics** section, follow the on-screen instructions to select and download the **Remote UEFI** version for the product.

Customizing Remote HP PC Hardware Diagnostics UEFI settings

Using the Remote HP PC Hardware Diagnostics setting in Computer Setup (BIOS), you can perform several customizations.

- Set a schedule for running diagnostics unattended. You can also start diagnostics immediately in interactive mode by selecting **Execute Remote HP PC Hardware Diagnostics UEFI**.
- Set the location for downloading the diagnostic tools. This feature provides access to the tools from the HP website or from a server that has been preconfigured for use. Your computer does not require the traditional local storage, such as a hard drive or USB flash drive, to run remote diagnostics.
- Set a location for storing the test results. You can also set the user name and password that you use for uploads.
- Display status information about the diagnostics run previously.

To customize Remote HP PC Hardware Diagnostics UEFI settings, follow these steps:

1. Turn on or restart the computer, and when the HP logo appears, press f10 to enter Computer Setup.

2. Select **Advanced**, and then select **Settings**.

3. Make your customization selections.

4. Select **Main**, then select **Save Changes and Exit** to save your settings.

Your changes take effect when the computer restarts.

11 Specifications

This chapter provides specifications for your computer system.

Computer specifications

This section provides specifications for your computer. When you travel with your computer, the computer dimensions and weights, as well as input power ratings and operating specifications, provide helpful information.

Table 11-1 Computer specifications

	Metric	U.S.
Dimensions		
Width	**385.0 mm**	15.2 in
Depth	**258.0 mm**	10.2 in
Height (front to back)	**23.0 mm**	0.9 in
Weight	**2.1 kg**	4.6 lb
Input power		
Operating voltage and current	19.5 V DC @ 2.31 A - 45 W	
	19.5 V DC @ 3.33 A - 65 W	
	19.5 V DC @ 4.62 A - 90 W	
	19.5 V DC @ 7.70 A - 150 W	
	19.5 V DC @ 10.3 A - 200 W	
Temperature		
Operating	**5°C to 35°C**	41°F to 95°F
Nonoperating	**-20°C to 60°C**	-4°F to 140°F
Relative humidity (noncondensing)		
Operating	10% to 90%	
Nonoperating	5% to 95%	
Maximum altitude (unpressurized)		
Operating	**-15 m to 3048 m**	-50 ft to 10,000 ft
Nonoperating	**-15 m to 12,192 m**	-50 ft to 40,000 ft

NOTE: Applicable product safety standards specify thermal limits for plastic surfaces. The device operates well within this range of temperatures.

Display specifications

This section provides specifications for your display.

Table 11-2 Display specifications

	Metric	U.S.
Active diagonal size	**39.6 cm**	15.6 in
Resolution	1920 × 1080 (FHD)	
	3840 × 2160 (UHD)	
Surface treatment	Antiglare (FHD, UHD panels)	
	Brightview (OLED panel)	
Brightness	250 nits (FHD, 45% NTSC panel)	
	300 nits (FHD, 72% NTSC/100% sRGB panels)	
	400 nits (UHD panel)	
Viewing angle	UWVA	
Backlight	WLED	
	AMOLED	
Display panel interface	eDP	

Hard drive specifications

This section provides specifications for your hard drives.

Table 11-3 Hard drive specifications

	500 GB*	750 GB*
Dimensions		
Height	9.5 mm	9.5 mm
Width	70 mm	70 mm
Weight	107 g max	102 g max
Interface type	SATA	SATA
Transfer rate	300 MBps	300 MBps
Security	ATA security	ATA security
Seek times (typical read, including setting)		
Single track	1.5 ms	1.1 ms
Average	12.0 ms	12.0 ms
Maximum	22.0 ms	21.0 ms
Logical blocks	976,752,240	1,465,149,168
Disk rotational speed	5400 rpm	5400 rpm

Table 11-3 Hard drive specifications (continued)

	500 GB*	750 GB*
Operating temperature	**0°C to 60°C** (0°F to 140°F)	**0°C to 60°C** (0°F to 140°F)

NOTE: *Size refers to hard drive storage capacity. Actual accessible capacity is less. Actual drive specifications can differ slightly.

Certain restrictions and exclusions apply. Contact support for details.

Solid-state drive specifications

This section provides specifications for your SSDs.

Table 11-4 SSD specifications

	256 GB*	256 GB OPAL2*	512 GB*	512 GB TLC*	1 TB/2 TB*
Dimensions					
Height	2.3 mm	2.3 mm	2.3 mm	2.3 mm	2.3 mm
Length	80 mm	80 mm	80 mm	80 mm	80 mm
Width	22 mm	22 mm	22 mm	22 mm	22 mm
Weight	< 10 g	< 10 g	< 10 g	< 10 g	< 10 g
Interface type	PCIe	PCIe	PCIe	PCIe	PCIe
Ready time, maximum (to not busy)	1.0 ms	1.0 ms	< 1.0 ms	< 1.0 ms	1.0 ms
Access times, logical	0.1 ms	0.1 ms	0.1 ms	0.1 ms	0.1 ms
Transfer rate					
Sequential read	Up to 3100 MBps	Up to 3100 MBps	Up to 3500 MBps	Up to 6450 MBps	Up to 6400 MBps
Random read	Up to 300,000 IOPs	Up to 300,000 IOPs	Up to 300,000 IOPs	Up to 300,000 IOPs	Up to 300,000 IOPs
Sequential write	Up to 1200 MBps	Up to 1200 MBps	Up to 1600 MBps	Up to 3500 MBps	Up to 5000 MBps
Random write	Up to 100,000 IOPs	Up to 100,000 IOPs	Up to 100,000 IOPs	Up to 100,000 IOPs	Up to 100,000 IOPs
Total logical sectors	500,118,192	1,000,215,216	1,000,215,216	1,000,215,216	1 TB: 2,000,409,264 2 TB: 4,000,797,360
Operating temperature	**0°C to 70°C** (32°F to 158°F)	**0°C to 70°C** (32°F to 158°F)	**0°C to 70°C** (32°F to 158°F)	**0°C to 70°C** (32°F to 158°F)	**0°C to 70°C** (32°F to 158°F)

*Actual accessible capacity is less. Actual drive specifications might differ slightly.

NOTE: Certain restrictions and exclusions apply. Contact support for details.

12 Statement of memory volatility

For general information regarding nonvolatile memory in HP business computers, and to restore nonvolatile memory that can contain personal data after the system has been turned off and the hard drive has been removed, use these instructions.

HP business computer products that use Intel®-based or AMD®-based system boards contain volatile DDR memory. The amount of nonvolatile memory present in the system depends upon the system configuration. Intel-based and AMD-based system boards contain nonvolatile memory subcomponents as originally shipped from HP, with the following assumptions:

- No subsequent modifications were made to the system.
- No applications, features, or functionality were added to or installed on the system.

Following system shutdown and removal of all power sources from an HP business computer system, personal data can remain on volatile system memory (DIMMs) for a finite period of time and also remains in nonvolatile memory. Use the following steps to remove personal data from the computer, including the nonvolatile memory found in Intel-based and AMD-based system boards.

NOTE: If your tablet has a keyboard base, connect to the keyboard base before beginning steps in this chapter.

Current BIOS steps

Use these instructions to restore nonvolatile memory.

1. Follow these steps to restore the nonvolatile memory that can contain personal data. Restoring or reprogramming nonvolatile memory that does not store personal data is neither necessary nor recommended.

   a. Turn on or restart the computer, and then quickly press esc.

   NOTE: If the system has a BIOS administrator password, type the password at the prompt.

   b. Select **Main**, select **Apply Factory Defaults and Exit**, and then select **Yes** to load defaults. The computer restarts.

   c. During the restart, press esc while the "Press the ESC key for Startup Menu" message is displayed at the bottom of the screen.

   NOTE: If the system has a BIOS administrator password, type the password at the prompt.

   d. Select the **Security** menu, select **Restore Security Settings to Factory Defaults**, and then select **Yes** to restore security level defaults. The computer restarts.

   e. During the restart, press esc while the "Press the ESC key for Startup Menu" message is displayed at the bottom of the screen.

   NOTE: If the system has a BIOS administrator password, type the password at the prompt.

f. If an asset or ownership tag is set, select the **Security** menu and scroll down to the **Utilities** menu. Select **System IDs**, and then select **Asset Tracking Number**. Clear the tag, and then make the selection to return to the prior menu.

g. If a DriveLock password is set, select the **Security** menu, and scroll down to **Hard Drive Utilities** under the **Utilities** menu. Select **Hard Drive Utilities**, select **DriveLock**, and then clear the check box for **DriveLock password on restart**. Select **OK** to proceed.

h. Select the **Main** menu, and then select **Reset BIOS Security to factory default**. Select **Yes** at the warning message. The computer restarts.

i. During the restart, press esc while the "Press the ESC key for Startup Menu" message is displayed at the bottom of the screen.

NOTE: If the system has a BIOS administrator password, type the password at the prompt.

j. Select the **Main** menu, select **Apply Factory Defaults and Exit**, select **Yes** to save changes and exit, and then select **Shutdown**.

k. Restart the system. If the system has a TPM, fingerprint reader, or both, one or two prompts will appear—one to clear the TPM and the other to Reset Fingerprint Sensor. Press or tap f1 to accept or f2 to reject.

l. Remove all power and system batteries for at least 24 hours.

2. Complete one of the following tasks:

- Remove and retain the storage drive.
- Clear the drive contents by using a third-party utility designed to erase data from an SSD.
- Clear the contents of the drive by using the following BIOS Setup Secure Erase command option steps:

NOTE: If you clear data using Secure Erase, you cannot recover it.

a. Turn on or restart the computer, and then quickly press esc.

b. Select the **Security** menu and scroll down to the esc menu.

c. Select **Hard Drive Utilities**.

d. Finish by completing one of these tasks:

- Under **Utilities**, select **Secure Erase**, select the hard drive storing the data you want to clear, and then follow the on-screen instructions to continue.
- Clear the contents of the drive using the following Disk Sanitizer commands steps:

i. Turn on or restart the computer, and then quickly press esc.

ii. Select the **Security** menu and scroll down to the **Utilities** menu.

iii. Select **Hard Drive Utilities**.

iv. Under **Utilities**, select **Disk Sanitizer**, select the hard drive with the data that you want to clear, and then follow the on-screen instructions to continue.

NOTE: The amount of time it takes for Disk Sanitizer to run can be several hours. Plug the computer into an AC outlet before starting.

Nonvolatile memory usage

Use this table to troubleshoot nonvolatile memory usage.

Table 12-1 Troubleshooting information for nonvolatile memory usage

Description	Volatility description	Storage user data	How to erase
Primary storage device, holds the OS, applications, and application settings	Nonvolatile, 8-256 GB of eMMC or NVMe SSD storage, removable	Yes[1]	See Current BIOS steps on page 75 for information about erasing the primary storage device.
System memory (RAM), holds transient data during system operation	Volatile, SODIMM socket. Removable (4 GB/8 GB/16 GB)	Yes	Unplug unit from power.
Permanent system BIOS settings	Nonvolatile, 16 KB, stored	No[2]	See Current BIOS steps on page 75 for information about clearing BIOS settings.
System boot ROM (BIOS)	Nonvolatile, 128 Mbit (16 MB) socketed, removable	No	Download the latest BIOS for your model from the HP website and follow the instructions to flash the BIOS that are on the website.
RTC (CMOS) RAM	Volatile, 256 bytes located in AMD embedded System on Chip (SoC)	No	**Desktop computers with a CMOS button:** Unplug unit from main power, remove top cover and press the **Clear CMOS** button. **Notebook and desktop computers without a CMOS button:** 1. Press and hold power button for 12 seconds. 2. Press Windows key + V, and then press power button.
Keyboard/mouse (ROM)	Nonvolatile, 2 KB embedded in the super I/O controller (SIO2)	Yes	N/A
Keyboard/mouse (RAM)	Volatile, 256 bytes embedded in the super I/O controller (SIO2)	No	Unplug unit from main power.
LOM EEPROM	Nonvolatile, 2 MB embedded in LAN controller	No	N/A
TPM	Nonvolatile, 51 KB ROM for firmware and 38 KB system parametric data	No[3]	See Current BIOS steps on page 75 for information about clearing TPM.

[1] Under typical operation, the only user data stored on the primary storage device are preferences for device configuration and settings for connections. However, the administrator can configure the system to allow users to store data locally.

[2] The only user data potentially stored in BIOS Settings are the ownership and asset tags, administrator password, and startup password.

[3] The TPM might contain encrypted passwords or certificates generated from user or administrator input.

Questions and answers

Use this section to answer your questions about nonvolatile memory.

1. **How can the BIOS settings be restored (returned to factory settings)?**

IMPORTANT: The restore defaults feature does not securely erase any information on your hard drive. See question and answer 6 for steps to securely erase information.

The restore defaults feature does not reset the Custom Secure Boot keys. See question and answer 7 for information about resetting the keys.

   a. Turn on or restart the computer, and then quickly press esc.

   b. Select **Main**, and then select **Apply Factory Defaults and Exit**.

   c. Follow the on-screen instructions.

   d. Select **Main**, select **Save Changes and Exit**, and then follow the on-screen instructions.

2. **What is a UEFI BIOS?**

   The Unified Extensible Firmware Interface (UEFI) BIOS is an industry-standard software interface between the platform firmware and an operating system (OS). It replaces the older legacy BIOS architecture.

   The UEFI BIOS provides an interface to display the system information and configuration settings and to change the configuration of your computer before an OS is loaded. BIOS provides a secure runtime environment that supports a GUI. In this environment, you can use either a pointing device (touch screen, touchpad, pointing stick, or USB mouse) or the keyboard to navigate and make menu and configuration selections. The UEFI BIOS also contains basic system diagnostics.

   In addition, the UEFI BIOS works to initialize the computer's hardware before loading and executing the OS; the runtime environment allows the loading and execution of software programs from storage devices to provide more functionality, such as advanced hardware diagnostics (with the ability to display more detailed system information) and advanced firmware management and recovery software.

3. **Where is the UEFI BIOS located?**

   The UEFI BIOS is located on a flash memory chip. You must use a utility to write to the chip.

4. **What kind of configuration data is stored on the DIMM Serial Presence Detect (SPD) memory module? How would this data be written?**

The DIMM SPD memory contains information about the memory module, such as size, serial number, data width, speed and timing, voltage, and thermal information. This information is written by the module manufacturer and stored on an EEPROM. You cannot write to this EEPROM when the memory module is installed in a computer. Third-party tools do exist that can write to the EEPROM when the memory module is not installed in a computer. Various third-party tools are available to read SPD memory.

5. **What is meant by "Restore the nonvolatile memory found in Intel-based system boards"?**

   This message relates to clearing the Real Time Clock (RTC) CMOS memory that contains computer configuration data.

6. **How can the BIOS security be reset to factory defaults and erase the data?**

IMPORTANT: Resetting results in the loss of information.

These steps do not reset Custom Secure Boot Keys. See question and answer 7 for information about resetting the keys.

   a. Turn on or restart the computer, and then quickly press esc.

   b. Select **Main**, and then select **Reset Security to Factory Defaults**.

   c. Follow the on-screen instructions.

   d. Select **Main**, select **Save Changes and Exit**, and then follow the on-screen instructions.

7. **How can the Custom Secure Boot Keys be reset?**

   Secure Boot is a feature to ensure that only authenticated code can start on a platform. If you enabled Secure Boot and created Custom Secure Boot Keys, disabling Secure Boot does not clear the keys. You must also select to clear the Custom Secure Boot Keys. Use the same Secure Boot access procedure that you used to create the Custom Secure Boot Keys, but select to clear or delete all Secure Boot Keys.

   a. Turn on or restart the computer, and then quickly press esc.

   b. Select the **Security** menu, select **Secure Boot Configuration**, and then follow the on-screen instructions.

   c. At the **Secure Boot Configuration** window, select **Secure Boot**, select **Clear Secure Boot Keys**, and then follow the on-screen instructions to continue.

Using HP Sure Start (select products only)

Select computer models are configured with HP Sure Start, a technology that monitors the computer's BIOS for attacks or corruption. If the BIOS becomes corrupted or is attacked, HP Sure Start automatically restores the BIOS to its previously safe state, without user intervention.

HP Sure Start is configured and already enabled so that most users can use the HP Sure Start default configuration. Advanced users can customize the default configuration.

To access the latest documentation on HP Sure Start, go to http://www.hp.com/support. Select **Find your product**, and then follow the on-screen instructions.

13 Power cord set requirements

This chapter provides power cord requirements for countries and regions.

The wide-range input feature of the computer permits it to operate from any line voltage from 100 V AC to 120 V AC, or from 220 V AC to 240 V AC.

The 3-conductor power cord set included with the computer meets the requirements for use in the country or region where the equipment is purchased.

Power cord sets for use in other countries or regions must meet the requirements of the country and region where the computer is used.

Requirements for all countries

These power cord requirements are applicable to all countries and regions.

- The length of the power cord set must be at least **1.0 m** (3.3 ft) and no more than **2.0 m** (6.5 ft).
- All power cord sets must be approved by an acceptable accredited agency responsible for evaluation in the country or region where the power cord set will be used.
- The power cord sets must have a minimum current capacity of 10 A and a nominal voltage rating of 125 V AC or 250 V AC, as required by the power system of each country or region.
- The appliance coupler must meet the mechanical configuration of an EN 60 320/IEC 320 Standard Sheet C13 connector for mating with the appliance inlet on the back of the computer.

Requirements for specific countries and regions

To determine power cord requirements for specific countries and regions, use this table.

Table 13-1 Power cord requirements for specific countries and regions

Country/region	Accredited agency	Applicable note number
Argentina	IRAM	1
Australia	SAA	1
Austria	OVE	1
Belgium	CEBEC	1
Brazil	ABNT	1
Canada	CSA	2
Chile	IMQ	1
Denmark	DEMKO	1
Finland	FIMKO	1
France	UTE	1
Germany	VDE	1

Table 13-1 Power cord requirements for specific countries and regions (continued)

Country/region	Accredited agency	Applicable note number
India	BIS	1
Israel	SII	1
Italy	IMQ	1
Japan	JIS	3
Netherlands	KEMA	1
New Zealand	SANZ	1
Norway	NEMKO	1
The People's Republic of China	CCC	4
Saudi Arabia	SASO	7
Singapore	PSB	1
South Africa	SABS	1
South Korea	KTL	5
Sweden	SEMKO	1
Switzerland	SEV	1
Taiwan	BSMI	6
Thailand	TISI	1
United Kingdom	ASTA	1
United States	UL	2

1. The flexible cord must be Type HO5VV-F, 3-conductor, 0.75 mm² conductor size. Power cord set fittings (appliance coupler and wall plug) must bear the certification mark of the agency responsible for evaluation in the country or region where it will be used.
2. The flexible cord must be Type SVT/SJT or equivalent, No. 18 AWG, 3-conductor. The wall plug must be a 2-pole grounding type with a NEMA 5-15P (15 A, 125 V AC) or NEMA 6-15P (15 A, 250 V AC) configuration. CSA or C-UL mark. UL file number must be on each element.
3. The appliance coupler, flexible cord, and wall plug must bear a T mark and registration number in accordance with the Japanese Dentori Law. The flexible cord must be Type VCTF, 3-conductor, 0.75 mm² or 1.25 mm² conductor size. The wall plug must be a 2-pole grounding type with a Japanese Industrial Standard C8303 (7 A, 125 V AC) configuration.
4. The flexible cord must be Type RVV, 3-conductor, 0.75 mm² conductor size. Power cord set fittings (appliance coupler and wall plug) must bear the CCC certification mark.
5. The flexible cord must be Type H05VV-F 3-conductor, 0.75 mm² conductor size. KTL logo and individual approval number must be on each element. Approval number and logo must be printed on a flag label.
6. The flexible cord must be Type HVCTF 3-conductor, 1.25 mm² conductor size. Power cord set fittings (appliance coupler, cable, and wall plug) must bear the BSMI certification mark.

7. For 127 V AC, the flexible cord must be Type SVT or SJT 3-conductor, 18 AWG, with plug NEMA 5-15P (15 A, 125 V AC), with UL and CSA or C-UL marks. For 240 V AC, the flexible cord must be Type H05VV-F 3-conductor, 0.75 mm² or 1.00 mm² conductor size, with plug BS 1363/A with BSI or ASTA marks.

14 Swelling or deformation of notebook battery

To protect your hardware from potential damage, HP recommends that if you are experiencing battery swelling, stop using the notebook until you can replace the battery.

You can contact HP to understand what battery replacement options are available. To learn more about lithium-ion batteries and the factors that can accelerate battery swelling, see https://support.hp.com/us-en/document/ish_6824662-6824706-16.

Swollen notebook batteries

You might notice that your notebook battery has become somewhat deformed or swollen over time. In some cases, the battery swelling might be significant enough to impact other components of the system including the touchpad, keyboard, and chassis.

Swollen battery is not a safety issue

A swollen battery does not present a safety issue. It is the result of the generation of gases per the normal degradation of the battery cell over time.

HP has worked closely with our battery cell suppliers and third-party industry experts to help minimize the potential for HP batteries to swell over time and to identify that swollen batteries are not a safety issue.

Discontinue using a swollen battery

To protect your hardware from potential damage, HP recommends that, if you are experiencing battery swelling, you stop using the notebook until the battery can be replaced.

You can contact https://www.hp.com/go/contacthp to understand what battery replacement options are available.

Replace a swollen battery

If a battery is under warranty, HP will replace the battery per the terms and conditions of the HP Worldwide Limited Warranty or applicable HP Care Packs.

For batteries no longer under warranty, contact HP to purchase a genuine HP replacement battery.

Minimize battery swelling

Multiple factors can accelerate battery swelling.

To help mitigate battery swelling over time, you can use either HP Adaptive Battery Optimizer (consumer notebooks) or HP Battery Health Manager (commercial notebooks) settings to improve battery longevity and performance for various use scenarios.

Adaptive Battery Optimizer (consumer notebooks)

Adaptive Battery Optimizer technology can help mitigate the factors that cause the battery to swell. It is available on select HP OMEN, HP Spectre, HP Pavilion, and HP ENVY notebook computers.

Adaptive Battery Optimizer has been available on select gaming notebooks since 2019 and select consumer notebooks since 2020. To learn more about enabling Adaptive Battery Optimizer on your HP notebook, see https://support.hp.com/us-en/document/ish_9908083-9908127-16.

HP Battery Health Manager (commercial notebooks)

HP Battery Health Manager provides an easy-to-manage solution to help mitigate factors that cause the battery to swell. It is available on select HP ProBook and HP EliteBook notebook computers.

HP Battery Health Manager is available on select commercial notebooks manufactured since 2016. To learn more about HP Battery Health Manager, see https://support.hp.com/us-en/document/ish_4449597-3519507-16.

15 Recycling

When a nonrechargeable or rechargeable battery has reached the end of its useful life, do not dispose of the battery in general household waste. Follow the local laws and regulations in your area for battery disposal.

HP encourages customers to recycle used electronic hardware, HP original print cartridges, and rechargeable batteries. For more information about recycling programs, see the HP website at http://www.hp.com/recycle.

Index

A

AC adapters, spare part numbers 19
action key, identifying 10
action keys
  calculator 12
  decrease screen brightness 11
  identifying 11
  increase screen brightness 11
  keyboard backlight 12
  mute microphone 12
  mute volume 12
  pause 12
  play 12
  programmable key 12
  Snipping Tool app 11
  speaker volume 12
  switch screen image 11
  using 11
  volume
    mute 12
audio
  adjusting volume 12
audio-out (headphone)/audio-in (microphone) combo jack, identifying 5
audio, product description 1

B

backup, creating 63
backups 63
battery
  illustrated 17
  spare part number 17
battery swelling 83
BIOS
  determining version 56, 60
  downloading an update 57, 58, 61
  preparing for an update 60
  starting the Setup Utility 56
  updating 56, 60
Bluetooth label 13
boot order
  changing using the f9 prompt 62
boot order, changing 65
bottom component 13
bottom cover
  illustrated 17
  removal 28
  spare part number 17, 28
buttons
  left touchpad 7, 8
  power 11
  right touchpad 7, 8

C

calculator action key 12
camera
  identifying 7
camera light, identifying 7
camera privacy cover, identifying 6
caps lock light 9
caring for your computer 24
cautions
  electrostatic discharge 20, 21
cleaning your computer 24
  caring for wood veneer 26
  disinfecting 25
  HP Easy Clean 24
  removing dirt and debris 24
components
  bottom 13
  display 5
  keyboard area 7
  left side 4
  lights 8
  rear 12
  right side 4
  touchpad 7, 8
computer major components 15
Computer Setup
  navigating and selecting 59
  restoring factory settings 59
  starting 59
computer specifications 72
connectors
  power 5
control zone 7

D

decrease screen brightness action key 11
display
  specifications 72, 73
display assembly
  subcomponents 17
display back cover
  illustrated 17
  spare part number 17
display bezel
  illustrated 17
  spare part number 17
display cable
  illustrated 17
  spare part number 17
display components 5
display panel
  illustrated 17
  product description 1
  spare part number 17

E

electrostatic discharge (ESD) 20, 21
  preventing damage 20-22
esc key, identifying 10

F

fan
  illustrated 17
  removal 41
  spare part number 17, 41
fn key, identifying 10

G

graphics, product description 1
grounding methods 20-22
guidelines
  packaging 20, 26
  transporting 20, 26
  workstation 20

H

hard drive
  product description 1

specifications 72, 73
HDMI port
identifying 5
heat sink
illustrated 17
removal 39
spare part number 17
spare part numbers 39
hinge
illustrated 17
spare part number 17
hinge cover
illustrated 17
spare part number 17
HP PC Hardware Diagnostics UEFI
downloading 69
failure ID code 68
HP Hotkey Support
software 69
starting 68, 69
using 68
HP PC Hardware Diagnostics
Windows
accessing 66, 67
downloading 67
failure ID code 66
installing 68
using 66
HP Recovery media
recovery 64
HP Sure Recover 65
HP Sure Start 75

I

illustrated parts catalog 15
increase screen brightness action key 11
infrared camera
identifying 6
infrared camera light,
identifying 6
infrared sensor board
removal 44
spare part number 44
internal microphones,
identifying 6

J

jacks
audio-out (headphone)/audio-in (microphone) 5

K

keyboard
product description 2
keyboard backlight action key 12
keyboard with top cover
spare part numbers 55
keys
action 10
esc 10
fn 10
Windows 10

L

labels
Bluetooth 13
regulatory 13
serial number 13
service 13
wireless certification 13
WLAN 13
left control zone, identifying 7
left side components 4
lights
camera 7
caps lock 9
infrared camera 6
microphone mute 9
mute 9
power 9
touchpad 7
low blue light mode 5

M

memory
nonvolatile 75
volatile 75
memory module
product description 1
microphone
product description 1
microphone mute light,
identifying 9
model name 1
mute light, identifying 9
mute microphone action key 12
mute volume action key 12

N

nonvolatile memory 75

O

operating system, product description 2

P

packaging guidelines 20, 26
pause action key 12
play action key 12
pointing device, product description 2
ports
HDMI 5
product description 2
USB 4
USB Type-C power connector and port with HP Sleep and Charge 5
power button, identifying 11
power connector
identifying 5
power cord
requirements for all countries 80
requirements for specific countries and regions 80
set requirements 80
power cords, spare part numbers 19
power light, identifying 9
power requirements, product description 2
primary storage
product description 1
processor
product description 1
product description
audio 1
display panel 1
graphics 1
hard drive 1
keyboard 2
memory module 1
microphone 1
operating system 2
pointing device 2
ports 2
power requirements 2
primary storage 1
processors 1
product name 1
security 2
serviceability 3
solid-state drive 1
video 1

wireless 2
product name 1
product name and number, computer 13

R

recovery 63
discs 64
media 64
USB flash drive 64
recovery media 63
creating using HP Cloud Recovery Download Tool 63
creating using Windows tools 63
regulatory information
regulatory label 13
wireless certification labels 13
Remote HP PC Hardware Diagnostics UEFI settings
customizing 71
using 70
removal and replacement procedures 28, 38
SSD 36
removing personal data from volatile system memory 75
restoring 63
restoring and recovery methods 64
right control zone, identifying 7
right side components 4

S

Screw Kit, spare part number 19
security, product description 2
serial number, computer 13
service labels, locating 13
serviceability, product description 3
setup utility
navigating and selecting 59
restoring factory settings 59
Snipping Tool app action key 11
solid-state drive
product description 1
specifications 74
spare part country codes 55
speaker
illustrated 17
removal 42
spare part number 17, 42
speaker volume action keys 12
special keys
identifying 10
using 10
specifications
computer 72
display 72, 73
hard drive 72, 73
solid-state drive 74
SSD
illustrated 17
removal and replacement 36
spare part number 17
static electricity 20, 21
support information 26
Sure Start
using 62, 79
swelling or deformation of notebook battery 83
switch screen image action key 11
system board
illustrated 17
removal 46
spare part number 17
spare part numbers 46
system memory, removing personal data from volatile 75
system restore 64
system restore point, creating 63

T

top cover/keyboard
illustrated 16
spare part number 16
touchpad
brightness control 8
illustrated 17
removal 45
settings 7
spare part number 17
spare part numbers 45
volume control 8
touchpad buttons
identifying 7, 8
touchpad components 7
touchpad light, identifying 7
touchpad settings, adjusting 7
touchpad zone, identifying 7, 8
TPM settings 62
transporting guidelines 20, 26
traveling with the computer 13

U

USB board
illustrated 17
removal 43
spare part number 17, 43
USB port, identifying 4
USB Type-C power connector and port with HP Sleep and Charge, identifying 5

V

vent, identifying 13
video, product description 1
volume
adjusting 12

W

wake-on-voice 5
Windows
backup 63
recovery media 63
system restore point 63
Windows key, identifying 10
Windows tools, using 63
wireless antennas
illustrated 17
spare part number 17
wireless antennas, identifying 6
wireless certification label 13
wireless, product description 2
WLAN antennas, identifying 6
WLAN device 13
WLAN label 13
WLAN module
removal 38
spare part number 38
workstation guidelines 20