Maintenance and Service Guide

HyperX OMEN 15 inch Gaming Laptop PC

Model numbers: 15-gb0xxx

SUMMARY

This guide provides maintenance information about such topics as spare parts, removal and replacement of parts, security, and backing up.

Legal information

© Copyright 2025, 2026 HP Development Company, L.P.

AMD, Ryzen, and Radeon are trademarks of Advanced Micro Devices, Inc. ChromeOS is a trademark of Google LLC. Bluetooth is a trademark owned by its proprietor and used by HP Inc. under license. Microsoft and Windows are either registered trademarks or trademarks of Microsoft Corporation in the United States and/or other countries. NVIDIA, GeForce RTX, and Optimus are trademarks and/or registered trademarks of NVIDIA Corporation in the U.S. and other countries. USB Type-C, USB-C, and the USB 5 Gbps and USB 10 Gbps port logos are trademarks or registered trademarks of USB Implementers Forum. DisplayPort, the DisplayPort logo, and VESA are trademarks owned by the Video Electronics Standards Association (VESA) in the United States and other countries. Wi-Fi is a registered trademark of Wi-Fi Alliance.

The information contained herein is subject to change without notice. The only warranties for HP products and services are set forth in the express warranty statements accompanying such products and services. Nothing herein should be construed as constituting an additional warranty. HP shall not be liable for technical or editorial errors or omissions contained herein.

Second Edition: July 2026

First Edition: December 2025

Document Part Number: P64392-002

Product notice

This guide describes features that are common to most products. Some features might not be available on your computer.

Not all features are available in all editions or versions of Windows. Systems might require upgraded and/or separately purchased hardware, drivers, software, or BIOS update to take full advantage of Windows functionality. Windows is automatically updated, which is always enabled. High-speed internet and Microsoft account required. ISP fees might apply and additional requirements might apply over time for updates. See http://www.windows.com. **If your product ships with Windows in S Mode:** Windows in S Mode works exclusively with apps from the Microsoft Store within Windows. Certain default settings, features, and apps cannot be changed. Some accessories and apps that are compatible with Windows might not work (including some antivirus, PDF writers, driver utilities, and accessibility apps), and performance might vary, even if you switch out of S Mode. If you switch to Windows, you cannot switch back to S Mode. Learn more at Windows.com/SmodeFAQ.

To access the latest user guides, go to http://www.hp.com/support, and follow the instructions to find your product. Then select **Setup & User Guides**.

Software Terms

By installing, copying, downloading, or otherwise using any software product preinstalled on this computer, you agree to be bound by the terms of the HP End User License Agreement (EULA). If you do not accept these license terms, your sole remedy is to return the entire unused product (hardware and software) within 14 days for a full refund subject to the refund policy of your seller.

For any further information or to request a full refund of the price of the computer, please contact your seller.

Safety warning notice

Reduce the possibility of heat-related injuries or of overheating the computer by following the practices described.

⚠ **WARNING!** To reduce the possibility of heat-related injuries or of overheating the computer, do not place the computer directly on your lap or obstruct the computer air vents. Use the computer only on a hard, flat surface. Do not allow another hard surface, such as an adjoining optional printer, or a soft surface, such as pillows, rugs or clothing, to block airflow. Also, do not allow the AC adapter to come into contact with the skin or a soft surface, such as pillows, rugs or clothing, during operation. The computer and the AC adapter provided by HP comply with the user-accessible surface temperature limits defined by applicable safety standards.

Important notice about Customer Self-Repair parts

Your computer includes Customer Self-Repair parts and parts that should be accessed only by an authorized service provider.

IMPORTANT: See Removal and replacement procedures for Customer Self-Repair parts on page 32 for details.

Accessing parts described in Removal and replacement procedures for authorized service provider parts on page 48 can damage the computer or void your warranty.

Table of contents

1 Product description 1

2 Getting to know your computer 6

Right side 6

Left side 6

Display 7

Advantages of flicker-free technology (select products only) 7

Low blue light mode (select products only) 7

Wake-on-voice (select products only) 8

Keyboard area 10

Touchpad settings and components 10

Touchpad settings 10

Adjusting touchpad settings 10

Turning on the touchpad 10

Touchpad components 10

Lights 11

Button 12

Special keys 13

Bottom 15

Rear 16

Labels 16

3 Illustrated parts catalog 18

Computer major components 18

Display assembly subcomponents 20

Miscellaneous parts 22

4 Removal and replacement procedures preliminary requirements 24

Tools required 24

Service considerations 24

Plastic parts 24

Cables and connectors 24

Drive handling 24

Electrostatic discharge information 25

Generating static electricity 25

Preventing electrostatic damage to equipment 26

Personal grounding methods and equipment 26

Grounding the work area 27

Recommended materials and equipment 27

Cleaning your computer 28

Enabling HP Easy Clean (select products only) 28
Removing dirt and debris from your computer 28
Cleaning your computer with a disinfectant 29
Caring for wood veneer (select products only) 30
Packaging and transporting guidelines 30
Accessing support information 30
5 Removal and replacement procedures for Customer Self-Repair parts 32
Component replacement procedures 32
Preparation for disassembly 32
Bottom cover 32
Battery 36
Removing and reinstalling the same battery 36
Installing a new battery 38
Memory modules 43
Solid-state drive 44
6 Removal and replacement procedures for authorized service provider parts 48
Component replacement procedures 48
WLAN module 48
Audio board 49
Speakers 50
Heat sink 52
Fans 54
System board 55
Touchpad 57
Display assembly 59
Top cover with keyboard 67
7 Using Setup Utility (BIOS) 69
Starting Setup Utility (BIOS) 69
Updating Setup Utility (BIOS) 69
Determining the BIOS version 69
Preparing for a BIOS update 70
Downloading a BIOS update 70
Installing a BIOS update 71
8 Using HP PC Hardware Diagnostics 72
Using HP PC Hardware Diagnostics Windows (select products only) 72
Using an HP PC Hardware Diagnostics Windows hardware failure ID code 72
Accessing HP PC Hardware Diagnostics Windows 72
Accessing HP PC Hardware Diagnostics Windows from HP Support Assistant (select products only) 72
Accessing HP PC Hardware Diagnostics Windows from the Start menu (select products only) 73
Downloading HP PC Hardware Diagnostics Windows 73
Downloading the latest HP PC Hardware Diagnostics Windows version from HP 73
Downloading the HP PC Hardware Diagnostics Windows from the Microsoft Store 73
Downloading HP Hardware Diagnostics Windows by product name or number (select products only) 74

Installing HP PC Hardware Diagnostics Windows 74
Using HP PC Hardware Diagnostics UEFI 74
Using an HP PC Hardware Diagnostics UEFI hardware failure ID code 74
Starting HP PC Hardware Diagnostics UEFI 74
Starting HP PC Hardware Diagnostics UEFI through HP Hotkey Support software (select products only) 75
Downloading HP PC Hardware Diagnostics UEFI to a USB flash drive 75
Downloading the latest HP PC Hardware Diagnostics UEFI version 76
Downloading HP PC Hardware Diagnostics UEFI by product name or number (select products only) 76
Using Remote HP PC Hardware Diagnostics UEFI settings (select products only) 76
Downloading Remote HP PC Hardware Diagnostics UEFI 76
Downloading the latest Remote HP PC Hardware Diagnostics UEFI version 76
Downloading Remote HP PC Hardware Diagnostics UEFI by product name or number 77
Customizing Remote HP PC Hardware Diagnostics UEFI settings 77

9 Backing up, restoring, and recovering 78

Backing up information and creating recovery media 78
Using Windows tools for backing up 78
Using the HP Cloud Recovery Download Tool to create a recovery USB flash drive (select products only) 78
Restoring and recovering your system 78
Creating a system restore 79
Restoring and recovery methods 79
Recovering using the HP Recovery USB flash drive 79
Changing the computer boot order 80
Using HP Sure Recover (select products only) 80

10 Specifications 81

Computer specifications 81
Display specifications 82
Solid-state drive specifications 82

11 Power cord set requirements 84

Requirements for all countries 84
Requirements for specific countries and regions 84

12 Swelling or deformation of notebook battery 87

Swollen notebook batteries 87
Swollen battery is not a safety issue 87
Discontinue using a swollen battery 87
Replace a swollen battery 87
Minimize battery swelling 87
Adaptive Battery Optimizer (consumer notebooks) 88
HP Battery Health Manager (commercial notebooks) 88

13 Recycling 89

Index 90

1 Product description

This table provides detailed product information.

NOTE: For the latest specifications related to your computer, go to http://www.hp.com/support and follow the instructions to find your product. Select **Specifications & Accessories**, select **Product information**, and then select the specifications link.

Table 1-1 Product components and their descriptions

Category	Description
Product name	**HyperX OMEN 15 inch Gaming Laptop PC**
	Model numbers: 15-gb0xxx
	CTO model number: 15t-gb000
Processors	**AMD® processors**
	AMD Ryzen™ AI 7 450
	AMD Ryzen 7 H 255
	AMD Ryzen 7 260
	AMD Ryzen 5 240
	AMD Ryzen 9 8945HX
	AMD Ryzen 9 8940HX
	AMD Ryzen 7 8745HX
Graphics	**AMD graphics**
	AMD Radeon™ 880M
	AMD Radeon 860M
	AMD Radeon 780M
	AMD Radeon 760M
	AMD Radeon 610M
	Supports HD decode, DX12, and HDMI
	Supports Optimus™
	Supports GPS (GPU Performance Scaling)
	Supports FreeSync Replay (internal and external)
	Hybrid Graphics
	Discrete graphics
	NVIDIA® GeForce RTX® 5060
	NVIDIA GeForce RTX 5050
Display	**38.86 cm (15.3 in)**

Table 1-1 Product components and their descriptions (continued)

Category	Description
	2.8K (2880 × 1800), OLED + low blue light, UWVA, BrightView, DCI-P3 100%, 500 nits, eDP 1.4 + PSR 2, 120 Hz (VRR)
	WQXGA (2560 × 1600), WLED, UWVA, antiglare, sRGB 100%, eDP 1.4 + PSR, 500 nits, 60 Hz - 180 Hz (VRR)
	WUXGA (1920 × 1200), WLED, antiglare, sRGB 62.5%, eDP 1.4 + PSR, 300 nits, 60 Hz - 165 Hz (VRR)
	• Flicker free
	• Panel certification (ESA/HDR 1100; VESA®/True Black HDR 1000; TUV/Low Blue Light; TUV + EyeSafe)
	• Panel certification (TUV + low blue light hardware solution + HP Eye Ease)
	• Screen-to-body ratio: 90.64%
	• Microsoft HDR Streaming Capable
	• Microsoft DRR (Dynamic Refresh Rate)
Memory	**Two SODIMM slots, customer upgradeable**
	Supports DDR5-5600 memory in the following configurations: • 24 GB (24 GB × 1) • 24 GB (24 GB × 1) (The People's Republic of China ([PRC]) • 16 GB (16 GB × 1 or 8 GB × 2) • 16 GB (16 GB × 1 or 8 GB × 2) (PRC) • 8 GB (8 GB × 1) • 8 GB (8 GB × 1) (PRC)
	Supports DDR5-5200 memory in the following configurations: • 32 GB (16 GB × 2) • 24 GB (24 GB × 1) • 24 GB (24 GB × 1) (PRC) • 16 GB (16 GB × 1 or 8 GB × 2) • 16 GB (16 GB × 1 or 8 GB × 2) (PRC)
Primary storage	**PCIe, Non-Volatile Memory express (NVMe), M.2 2280 solid-state drives (SSDs)**
	1 TB, PCIe-4 × 4
	1 TB, PCIe-4 × 4 (PRC)
	1 TB, PCIe-5 × 4 (Gen5)
	1 TB, PCIe-5 × 4 (Gen 5) (PRC)
	512 GB, PCIe-4 × 4
	512 GB, PCIe-4 × 4 (PRC)
	512 GB, PCIe-5 × 4 (Gen5)
	512 GB, PCIe-5 × 4 (Gen 5) (PRC)

Table 1-1 Product components and their descriptions (continued)

Category	Description
Audio and video	Dual speakers
	HyperX
	Supports DTS:X:Ultra
	Supports HP Audio Boost
	Supports XiaoHui
Video	**HP TrueVision FHD camera**: USB 2.0, indicator LED, f2.0, FHD BSI sensor, WDR/TNR/HDR, 80° narrow field-of-view (NFOV)
	HP TrueVision FHD + IR camera: USB 2.0, indicator LED, 1× infrared (IR) LED, f2.0, FHD BSI sensor, WDR/TNR/HDR, 88° wide field-of-view (WFOV)
	Dual-array digital microphone with appropriate software: beam forming, echo cancellation, noise suppression
	1080p by 30 frames per second
Wireless	**Integrated wireless module** (M.2 2230 with dual antennas)
	Realtek Wi-Fi® 6 RTL8852BE-VT + Bluetooth® 5.4 (802.11ax 2 × 2)
	MediaTek MT7925 M.2 2230 Wi-Fi 7 + Bluetooth 6.0 (802.11be 2 × 2)
	• Bluetooth LE Audio
	• Dynamic Antenna Gain
Wired LAN	Ethernet Integrated 10/100/1000 NIC
Ports	Audio-out (headphone)/audio-in (microphone) combo jack
	Smart Pin AC adapter plug
	RJ-45 connector
	HDMI 2.1 (supports up to 8 K @ 60 Hz, 4 K @ 60 Hz, 8 K @ 30 Hz)
	USB 3.2 Gen 2 Type-A 10 Gbps (1 of left side, 1 on right side)
	USB 3.2 Gen 2 Type-C® (rear) • Data transfer • Power delivery 3.1, 100 W • HP Sleep & Charge • DisplayPort™ 1.4 out up to 4 K @ 120 Hz • HDMI 2.1 out up to 4 K @ 120 Hz with HDCP 2.3 out through adapter
Keyboard/pointing devices	**Keyboard** (with numeric keypad, 26-key rollover support)
	Backlit, 1 color
	Backlit, 4 colors
	Haptics touchpad
	Image sensor
	Multitouch gestures enabled

Table 1-1 Product components and their descriptions (continued)

Category	Description
	Precision touchpad
	Modern trackpad gestures
	Taps enabled as default
Power requirements	**Battery** (HP Long Life, polymer)
	4 cell, 70 Wh
	HP Fast Charge Technology
	Smart AC adapters (select products only)
	150 W, slim, right angle, PFC, 3 pin, 4.5 mm
	200 W, slim, right angle, PFC, 3 pin, 4.5 mm
	230 W, slim, right angle, PFC, 3 pin, 4.5 mm
	280 W, standard, right angle, PFC, 3 pin, 4.5 mm
	Power cord (select products only)
	C5, conventional, 1 m (3.3 ft), sticker
	C13, conventional, 1.83 m (6.0 ft), paper sticker, premium, straight, HE
Security	Supports firmware-based Trusted Platform Module (TPM) 2.0
Operating system	Windows® 11 Home 64
	Windows 11 Home 64 Advanced
	Windows 11 Home 64 Advanced Single Language
	Windows 11 Home 64 Chinese Market CPPP
	Windows 11 Home 64 Copilot+ Premium
	Windows 11 Home 64 Copilot+ Premium Chinese Market PPP
	Windows 11 Home 64 Copilot+ Premium Single Language India Market PPP
	Windows 11 Home 64 Copilot+ Premium Single Language Indonesia Market PPP
	Windows 11 Home 64 High-end Chinese Market PPP
	Windows 11 Home 64 NextGen Premium Single Language Africa Market PPP
	Windows 11 Home 64 NextGen Premium Single Language APAC EM PPP
	Windows 11 Home 64 Plus
	Windows 11 Home 64 Plus Single Language
	Windows 11 Home 64 Plus Single Language Africa Market PPP
	Windows 11 Home 64 Plus Single Language APAC EM PPP
	Windows 11 Home 64 Plus Single Language India Market PPP
	Windows 11 Home 64 Single Language
	Windows 11 Home 64 Single Language Africa Market PPP
	Windows 11 Home 64 Single Language APAC EM PPP

Table 1-1 Product components and their descriptions (continued)

Category	Description
	Windows 11 Home 64 Single Language India Market PPP
	Windows 11 Home 64 Single Language Indonesia Market PPP
	Windows 11 Pro 64
	Windows 11 Pro 64 Copilit+ Premium
	Windows 11 Pro 64 High End
	FreeDOS 3.0
Serviceability	**End user replaceable parts**
	AC adapter
	Bottom cover
	Battery
	Memory modules
	SSD

2 Getting to know your computer

Your computer features top-rated components. This chapter provides details about your components, where they are located, and how they work.

Right side

Use this illustration and table to identify the components on the right side of the computer.

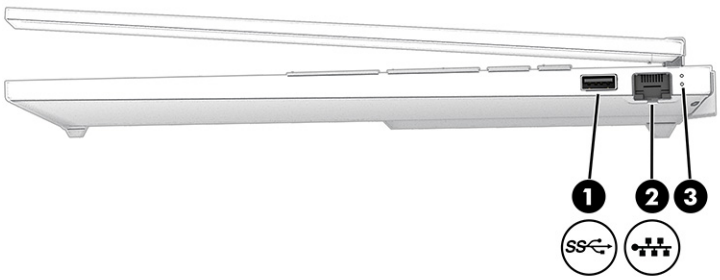

Table 2-1 Right-side components and their descriptions

		Component	Description
(1)		USB port	Connects a USB device, provides high-speed data transfer, and (for select products) charges small devices (such as a smartphone) when the computer is on or in sleep mode.
(2)		RJ-45 (network) jack	Connects a network cable.
(3)		RJ-45 (network) status lights	• White: The network is connected. • Amber: Activity is occurring on the network.

Left side

Use this illustration and table to identify the components on the left side of the computer.

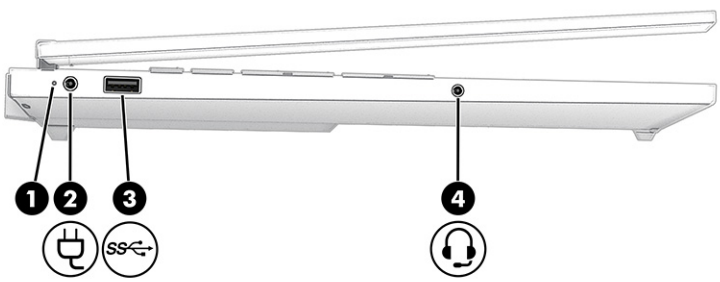

Table 2-2 Left-side components and their descriptions

		Component	Description
(1)		Power light	• White: The AC adapter is connected and the battery is fully charged. • Blinking amber: The AC adapter is disconnected and the battery has reached a low battery level. • Amber: The AC adapter is connected and the battery is charging. • Off: The battery is not charging.
(2)		Power connector	Connects an AC adapter.
(3)		USB port	Connects a USB device, provides high-speed data transfer, and (for select products) charges small devices (such as a smartphone) when the computer is on or in sleep mode.
(4)		Audio-out (headphone)/Audio-in (microphone) combo jack	Connects optional powered stereo speakers, headphones, earbuds, a headset, or a television audio cable. Also connects an optional headset microphone. This jack does not support optional standalone microphones. **WARNING!** To reduce the risk of personal injury, adjust the volume before putting on headphones, earbuds, or a headset. For additional safety information, see the *Regulatory, Safety, and Environmental Notices*. To access this guide: ▪ Select the **Search** icon in the taskbar, type `HP Documentation` in the search box, and then select **HP Documentation**. **NOTE:** When a device is connected to the jack, the computer speakers are disabled.

Display

The computer display can include essential components such as speakers, antennas, cameras, and microphones.

Advantages of flicker-free technology (select products only)

Monitors with flicker-free display technology help protect your eyes from fatigue, dryness, itchiness, or irritation. This technology allows you to work on spreadsheets, play games, or watch videos comfortably.

Low blue light mode (select products only)

Your computer display is shipped from the factory in low blue light mode for improved eye comfort and safety. Also, blue light mode automatically adjusts blue light emissions when you are using the computer at night or for reading.

⚠ **WARNING!** To reduce the risk of serious injury, read the *Safety & Comfort Guide*. It describes proper workstation setup and proper posture, health, and work habits for computer users. The *Safety & Comfort*

Guide also provides important electrical and mechanical safety information. The *Safety & Comfort Guide* is available on the web at http://www.hp.com/ergo.

Wake-on-voice (select products only)

Use the wake-on-voice feature to bring the computer out of the sleep state quickly.

To access the wake-on-voice settings, follow these steps:

1. Select the **Search** icon in the taskbar, type `XiaoWei` in the search box, and then select **XiaoWei**.
2. When the tool opens, scan the QR code with your mobile device, which takes you to the settings page, where you can select your wake-on-voice features.
3. Follow the on-screen instructions.

NOTE: Allow the XiaoWei app to continue running on the computer.

Refer to the illustration that most closely matches your computer.

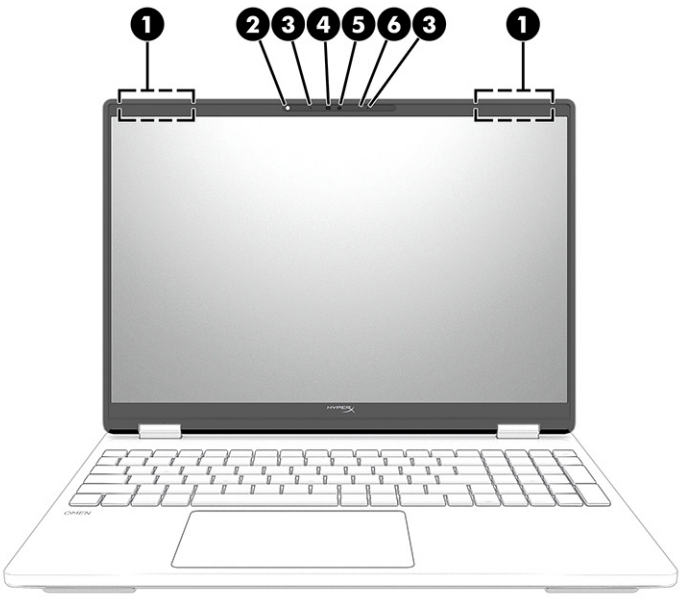

Table 2-3 Display components and their descriptions

	Component	Description
(1)	WLAN antennas (2)*	Send and receive wireless signals to communicate with wireless local area networks (WLANs).
(2)	IR camera light	On: One or more cameras are in use.
(3)	Internal microphones (2)	Record sound.
(4)	IR camera	Allows you to video chat, record video, and record still images Some cameras also allow a facial recognition logon to Windows, instead of a password logon. **NOTE:** Camera functions vary depending on the camera hardware and software installed on your product.

Table 2-3 Display components and their descriptions (continued)

	Component	Description
(5)	Camera	Allows you to video chat, record video, and record still images. Some cameras also allow a facial recognition logon to Windows, instead of a password logon. **NOTE:** Camera functions vary depending on the camera hardware and software installed on your product.
(6)	Camera light	On: The camera is in use.

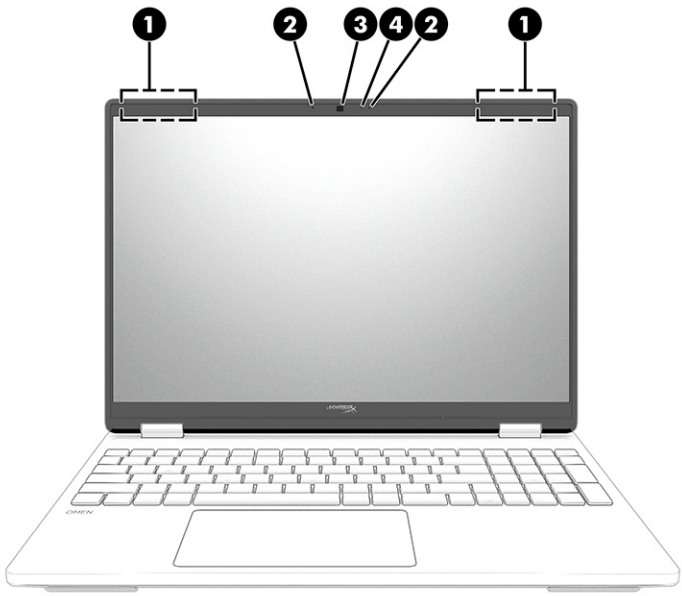

Table 2-4 Display components and their descriptions

	Component	Description
(1)	WLAN antennas (2)*	Send and receive wireless signals to communicate with wireless local area networks (WLANs).
(2)	Internal microphones (2)	Record sound.
(3)	Camera	Allows you to video chat, record video, and record still images. Some cameras also allow a facial recognition logon to Windows, instead of a password logon. **NOTE:** Camera functions vary depending on the camera hardware and software installed on your product.
(4)	Camera light	On: The camera is in use.

*The antennas are not visible from the outside of the computer. For optimal transmission, keep the areas immediately around the antennas free from obstructions.

For wireless regulatory notices, see the section of the *Regulatory, Safety, and Environmental Notices* that applies to your country or region.

To access this guide:

- Select the **Search** icon in the taskbar, type `HP Documentation` in the search box, and then select **HP Documentation**.

Keyboard area

Keyboards can vary by language.

NOTE: The keyboard area, including the function keys and (select products only) power key, is disabled in stand, tent, and tablet modes. To enable the keyboard, including the power key, change to the clamshell mode.

Touchpad settings and components

Learn the touchpad settings and components.

Touchpad settings

Learn how to adjust touchpad settings.

Adjusting touchpad settings

Use these steps to adjust touchpad settings and gestures.

1. Select the **Search** icon in the taskbar, type `touchpad settings` in the search box, and then press enter.
2. Choose a setting.

Turning on the touchpad

Follow these steps to turn on the touchpad.

1. Select the **Search** icon in the taskbar, type `touchpad settings` in the search box, and then press enter.
2. Using an external mouse, click the **touchpad** button.

   If you are not using an external mouse, press the Tab key repeatedly until the pointer rests on the **touchpad** button. Then press the spacebar to select the button.

Touchpad components

Use this illustration and table to identify the touchpad components.

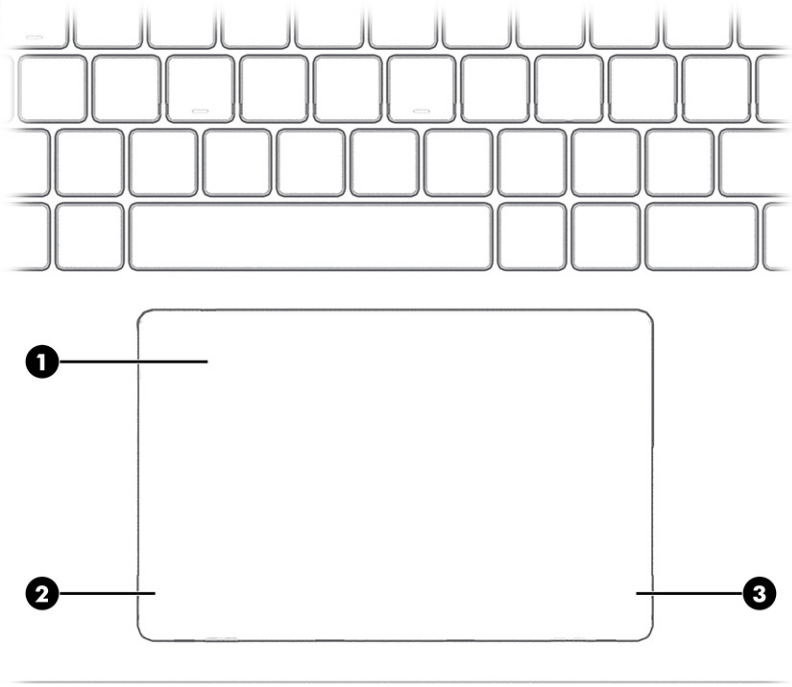

Table 2-5 Touchpad components and their descriptions

	Component	Description
(1)	Touchpad zone	Reads your finger gestures to move the pointer or activate items on the screen.
(2)	Left touchpad button	Functions like the left button on an external mouse.
(3)	Right touchpad button	Functions like the right button on an external mouse.

Lights

Use this illustration and table to identify the lights on the computer.

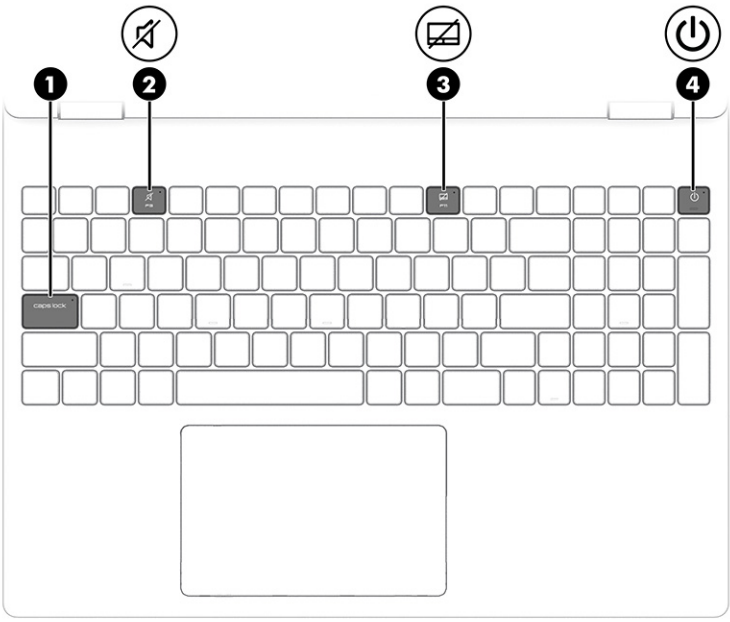

Table 2-6 Lights and their descriptions

		Component	Description
(1)		Caps lock light	• On: Caps lock is on, which switches the key input to all capital letters. • Off: Caps lock is off, which switches the key input to all lowercase letters.
(2)		Mute light	• On: Computer sound is off. • Off: Computer sound is on.
(3)		Touchpad key	• On: Touchpad is off. • Off: Touchpad is on.
(4)		Power light	• White: The AC adapter is connected and the battery is fully charged. • Blinking amber: The AC adapter is disconnected and the battery has reached a low battery level. • Amber: The AC adapter is connected and the battery is charging. • Off: The battery is not charging.

Button

Use this illustration to identify the power button.

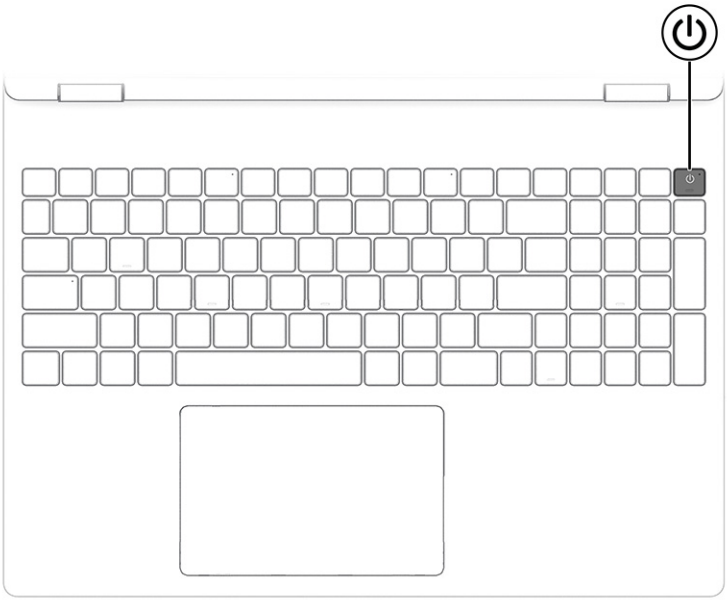

Table 2-7 Power button and its description

		Component	Description
(1)	⏻	Power button	• When the computer is off, press the button briefly to turn on the computer. • When the computer is on, press the button briefly to initiate sleep. • When the computer is in the sleep state, press the button briefly to exit sleep (select products only). • When the computer is in hibernation, press the button briefly to exit hibernation. **IMPORTANT:** Pressing and holding down the power button results in the loss of unsaved information. If the computer has stopped responding and shutdown procedures are ineffective, press and hold the power button down for at least 10 seconds to turn off the computer. To learn more about your power and sleep settings: ▪ Right-click the **Power** icon, and then select **Power and sleep settings**.

Special keys

Use this illustration to identify the special keys.

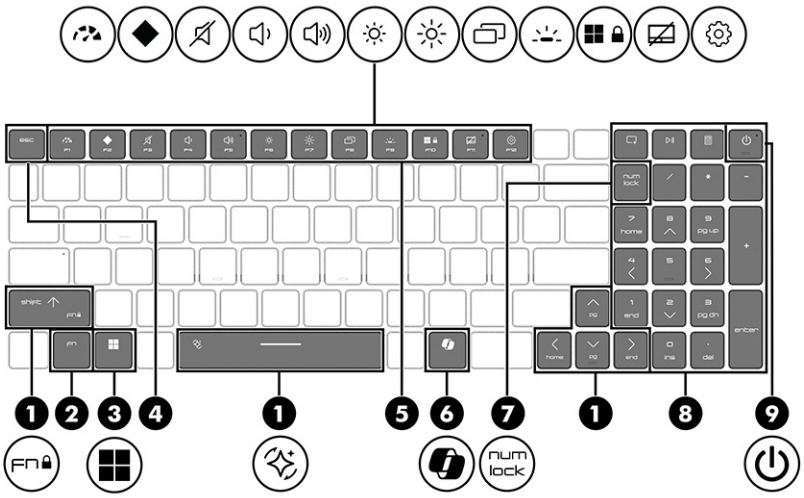

Table 2-8 Special keys and their descriptions

	Component	Description
(1)	Dual action keys (3)	• Main function: Displayed in a larger font size on the key. • Secondary function: Displayed in the corner of the key or at the bottom of the key in a smaller font size. Activate the secondary function by pressing and holding the fn key at the same time and then pressing the dual-action key. **NOTE:** FN Lock status only affects the behavior of the f1 through f12 function keys.
(2)	fn key	Executes specific functions when pressed in combination with another key. **NOTE:** When using combination shortcut keys, the order in which keys are pressed may affect the result.
(3)	Windows key	Opens the Start menu. **NOTE:** Pressing the Windows key again will close the Start menu.
(4)	esc key	Displays system information when pressed in combination with the fn key.
(5)	Action keys	Execute frequently used system functions as defined by the icon symbols on f1 through f12 function keys.
(6)	Windows Copilot key	Opens Windows Copilot (select products only). **NOTE:** Copilot in Windows (select products only) requires Windows 11. Some features require a neural processing unit (NPU). The timing of feature delivery and availability varies by market and device. You must have a Microsoft account to use the Copilot feature. When the Copilot feature is not available, pressing the Copilot key opens the Bing search engine. See http://aka.ms/WindowsAIFeatures.
(7)	num lock key	Alternates between the navigational and numeric functions on the integrated numeric keypad.

Table 2-8 Special keys and their descriptions (continued)

		Component	Description
(8)		Integrated numeric keypad	A separate keypad to the right of the alphabet keyboard. When num lock is pressed, the keypad can be used like an external numeric keypad. **NOTE:** If the keypad function is active when the computer is turned off, that function is reinstated when the computer is turned back on.
(9)	⏻	Power key	• When the computer is off, press the key briefly to turn on the computer. • When the computer is on, press the key briefly to initiate sleep. • When the computer is in the sleep state, press the key briefly to exit sleep (select products only). • When the computer is in hibernation, press the key briefly to exit hibernation. **IMPORTANT:** Pressing and holding down the power key results in the loss of unsaved information. If the computer has stopped responding and shutdown procedures are ineffective, press and hold the power key down for at least 10 seconds to turn off the computer. To learn more about your power and sleep settings: ▪ Right-click the **Power** icon, and then select **Power and sleep settings**.

Bottom

Identify the bottom components.

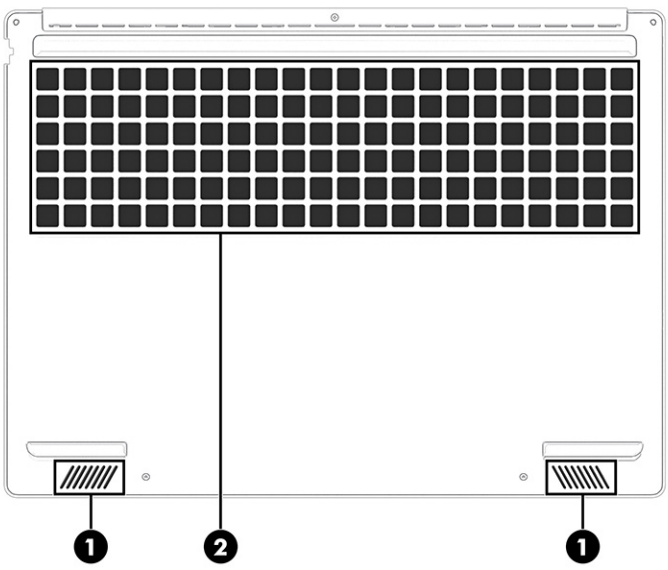

Table 2-9 Bottom components and their descriptions

	Component	Description
(1)	Speakers (2)	Produce sound.
(2)	Vent	Enables airflow to cool internal components. **NOTE:** The computer fan starts up automatically to cool internal components and prevent overheating. It is normal for the internal fan to cycle on and off during routine operation.

Rear

Use this illustration and table to identify the rear components.

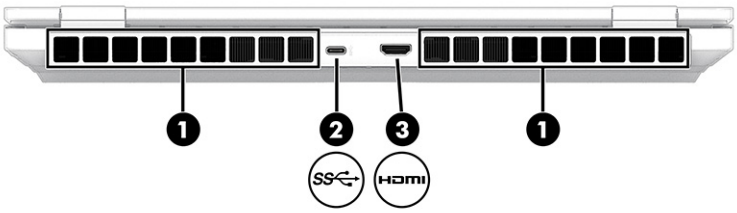

Table 2-10 Rear components and their descriptions

		Component	Description
(1)		Vents (2)	Enable airflow to cool internal components. **NOTE:** The computer fan starts up automatically to cool internal components and prevent overheating. It is normal for the internal fan to cycle on and off during routine operation.
(2)	SS	USB Type-C® port	Connects a USB device, provides high-speed data transfer, and (for select products) charges small devices (such as a smartphone) when the computer is on or in sleep mode.
(3)	HDMI	HDMI port	Connects an optional video or audio device, such as a high-definition television, any compatible digital or audio component, or a high-speed High Definition Multimedia Interface (HDMI) device.

Labels

The labels affixed to the computer provide information that you might need when you troubleshoot system problems or travel internationally with the computer. Labels can be in paper form or imprinted on the product.

IMPORTANT: Check the following locations for the labels described in this section: the bottom of the computer, inside the battery bay, under the service door, on the back of the display, or on the bottom of a tablet kickstand.

- Service label—Provides important information to identify your computer. When contacting support, you might be asked for the serial number, the product number, or the model number. Locate this information before you contact support.

  Your service label will resemble the following example:

Table 2-11 Service label components

	Component
(1)	Serial number
(2)	Product ID
(3)	HP product name and model number

- Regulatory labels—Provide regulatory information about the computer.
- Wireless certification labels—Provide information about optional wireless devices and the approval markings for the countries or regions in which the devices have been approved for use.

3 Illustrated parts catalog

Use this chapter to determine the spare parts that are available for the computer.

Computer major components

Use this illustration and table to identify the computer major components.

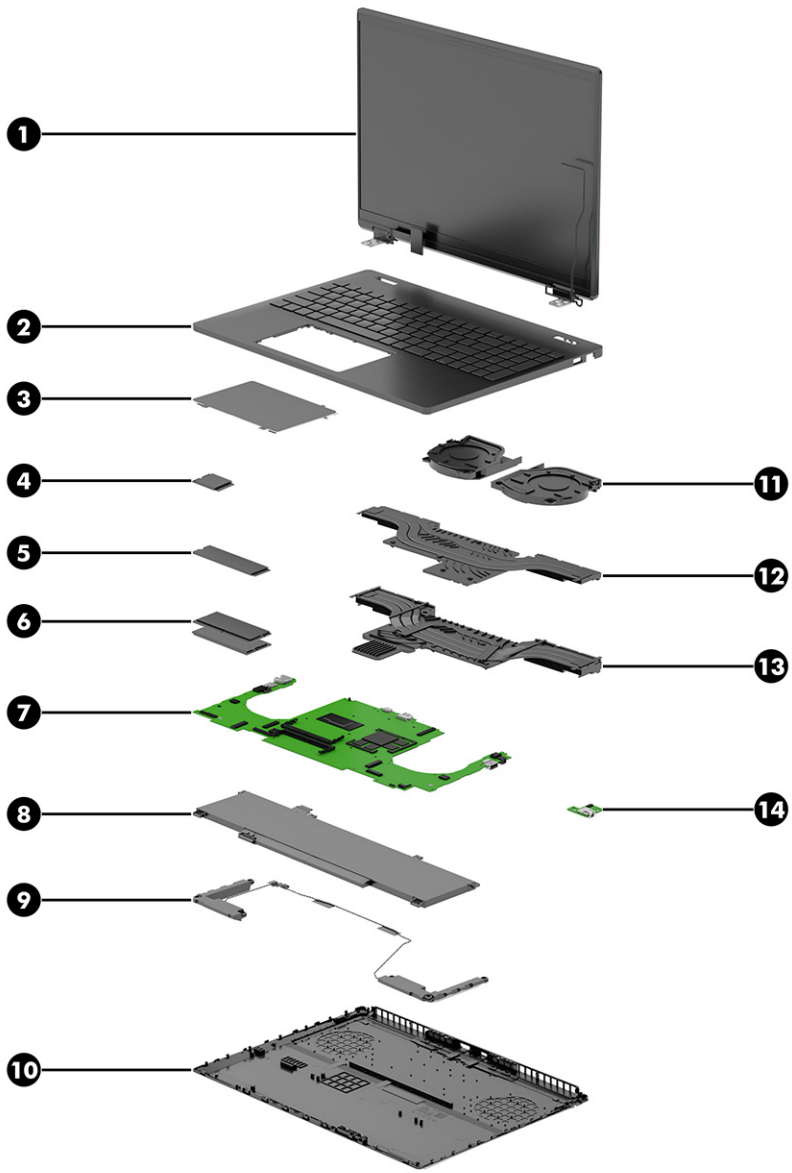

Table 3-1 Computer major component descriptions and part numbers

Item	Component	Spare part number
(1)	**Display assembly** **NOTE:** Display assemblies are offered as spare parts only at a subcomponent level.	not available as a spare part
(2)	**Top cover with keyboard** **NOTE:** For a detailed list of country codes, see Top cover with keyboard on page 67.	
	One-color backlit keyboard	P78977-xx1
	Four-color backlit keyboard	P79693-xx1
(3)	**Touchpad** (includes cable)	P79802-001
(4)	**WLAN module**	
	Realtek Wi-Fi 6 RTL8852BE-VT + Bluetooth 5.4	P06350-005
	MediaTek Wi-Fi 7 MT7925 + Bluetooth 6.0	N64647-005
(5)	**SSD** (PCIe)	
	1 TB, Gen4	N77394-001
	1 TB, Gen5	P73030-001
	512 GB, Gen4	N77392-001
	512 GB, Gen5	P73029-001
(6)	**Memory modules** (DDR-5600)	
	24 GB	P55196-001
	16 GB	N77399-001
	8 GB	N77398-001
(7)	**System board** (includes integrated processor and discrete graphics)	
	AMD Ryzen AI 7 450 processor and NVIDIA GeForce RTX 5060 graphics	P78810-601
	AMD Ryzen H 255 processor and NVIDIA GeForce RTX 5060 graphics (PRC)	P78817-601
	AMD Ryzen H 255 processor and NVIDIA GeForce RTX 5050 graphics (PRC)	P78816-601
	AMD Ryzen 7 260 processor and NVIDIA GeForce RTX 5060 graphics	P78808-601
	AMD Ryzen 7 260 processor and NVIDIA GeForce RTX 5050 graphics	P78805-601
	AMD Ryzen 5 240 processor and NVIDIA GeForce RTX 5060 graphics	P78807-601
	AMD Ryzen 5 240 processor and NVIDIA GeForce RTX 5050 graphics	P78804-601
	AMD Ryzen 9 8940HX processor and NVIDIA GeForce RTX 5060 graphics	P78813-601
	AMD Ryzen 9 8945HX processor and NVIDIA GeForce RTX 5060 graphics (PRC)	P78819-601
	AMD Ryzen 7 8745HX processor and NVIDIA GeForce RTX 5060 graphics	P78812-601
	AMD Ryzen 7 8745HX processor and NVIDIA GeForce RTX 5060 graphics (PRC)	P79839-601
	AMD Ryzen 7 8945HX processor and NVIDIA GeForce RTX 5050 graphics	P78811-601
	AMD Ryzen 7 8945HX processor and NVIDIA GeForce RTX 5050 graphics (PRC)	P78818-601
(8)	**Battery** (includes revive kit)	P08167-001

Table 3-1 Computer major component descriptions and part numbers (continued)

Item	Component	Spare part number
(9)	**Speakers** (left and right)	P79800-001
(10)	**Bottom cover**	
	For use in models with AMD Ryzen 7 H 255/Ryzen 7 260/Ryzen 5 240 processors	P79795-001
	For use in models with AMD Ryzan AI/Ryzen 9 8945HX/Ryzen 9 8940HX/Ryzen 7 8745HX processors	P79795-002
(11)	**Fans**	P79805-001
(12)	**Heat sink** (Ryzen 7 H 255, Ryzen 7 260, Ryzen 5 240 processors)	P79807-001
(13)	**Heat sink** (Ryzen AI 7 450 processors)	P79807-003
(14)	**Audio board**	P79796-001

Display assembly subcomponents

Use this illustration and table to identify the display assembly subcomponents.

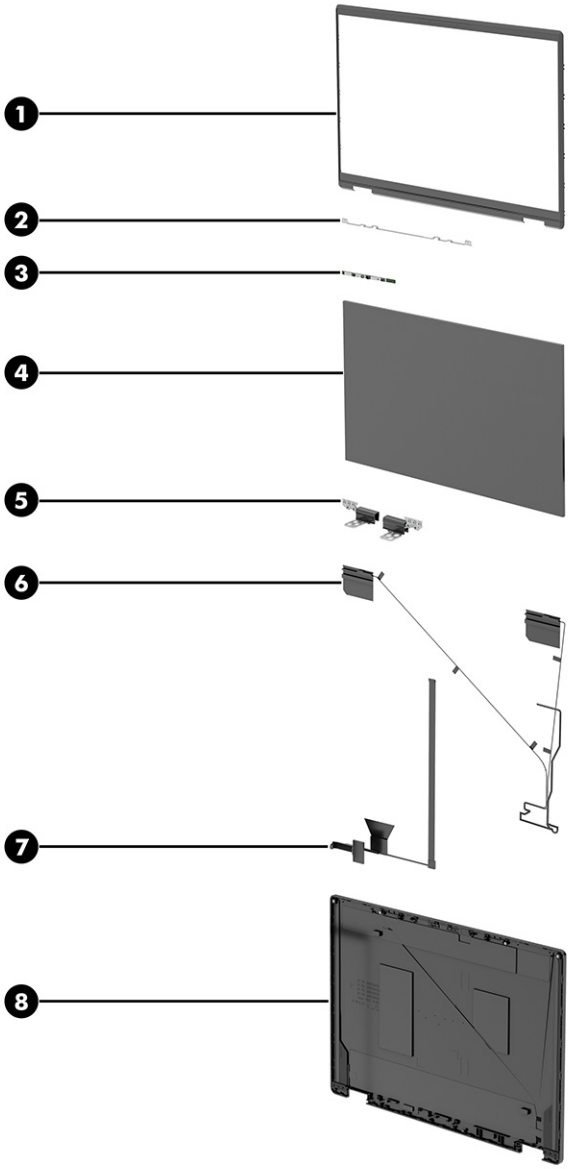

Table 3-2 Display component descriptions and part numbers

Item	Component	Spare part number
(1)	**Display bezel**	P79794-001
(2)	**Camera support bracket**	not available as a spare part
(3)	**Camera module** (includes cable, bezel tape, and panel stretchable adhesive tape)	P79803-001
(4)	**Display panel** (includes cable, bezel tape, and panel stretchable tape)	
	WQXGA, 500 nits	P80062-001
	WUXGA, 300 nits	P80063-001
(5)	**Hinges** (left and right, includes bezel tape and panel stretchable adhesive tape)	P79801-001
(6)	**Wireless antenna kit** (included in the Cable Kit)	P79798-001

Table 3-2 Display component descriptions and part numbers (continued)

Item	Component	Spare part number
(7)	**Display panel cable** (includes bezel tape and panel stretchable adhesive tape)	P79799-001
(8)	**Display back cover** (includes wireless antennas, gap filler, and bezel tape)	
	WQXGA display	P79793-001
	WUXGA display	P79793-002

Miscellaneous parts

Use this table to identify the miscellaneous parts.

Table 3-3 Miscellaneous part descriptions and part numbers

Component	Spare part number
Screw Kit	P79804-001
Cable and Antenna Kit (includes audio board cable, touchpad cable, battery cable, wireless antennas, and bezel and display panel adhesive tapes)	P79798-001
AC adapter	
280 W, PFC, 3 pin, 4.5 mm	M95376-001
280 W, PFC, 3 pin, right angle, 4.5 mm	P55562-001
230 W, PFC, 3 pin, 4.5 mm	N22367-001
230 W, PFC, 3 pin, right angle, 4.5 mm	P55558-001
200 W, PFC, 3 pin, 4.5 mm	N43500-001
200 W, PFC, 3 pin, right angle, 4.5 mm	P55554-001
150 W, PFC, 3 pin, 4.5 mm	L32661-001
150 W, PFC, 3 pin, right angle, 4.5 mm	P55551-001
120 W, PFC, 3 pin, 4.5 mm	M95377-001
Power cords (C5, conventional, straight, 1.0 m [3.3 ft])	
Argentina	L19357-001
Australia	L19358-001
Denmark	L19360-001
Europe (Austria, Belgium, Finland, France, Germany, the Netherlands, Norway, and Sweden)	L19361-001
India	L19363-001
Israel	L19362-001
Italy	L19364-001
Japan	L19365-001
North America	L19367-001
PRC	L19368-001
South Africa	L19369-001

Table 3-3 Miscellaneous part descriptions and part numbers (continued)

Component	Spare part number
South Korea	L19366-001
Switzerland	L19370-001
Taiwan	L19372-001
Thailand	L19371-001
Thailand (bundle)	M85418-001
United Kingdom	L19373-001
Power cords (C13, 1.83 m [6.0 ft])	
Argentina	M82819-001
Australia	M82822-001
Denmark	M82829-001
Europe (Austria, Belgium, Finland, France, Germany, the Netherlands, Norway, and Sweden)	M82827-001
India	M82824-001
Israel	M82830-001
Italy	M82831-001
Japan	M82825-001
North America	M82821-001
PRC	M82823-001
South Africa	M82832-001
Switzerland	M82833-001
Taiwan	M82826-001
United Kingdom	M82834-001
Flange premium straight desktop	P10529-001

4 Removal and replacement procedures preliminary requirements

Use this information to properly prepare to disassemble and reassemble the computer.

Tools required

You need the following tools to complete the removal and replacement procedures.

- Tweezers
- Nonconductive, nonmarking pry tool
- Magnetic Phillips P1 screwdriver

Service considerations

The following sections include some of the considerations that you must keep in mind during disassembly and assembly procedures.

NOTE: As you remove each subassembly from the computer, place the subassembly and all accompanying screws away from the work area to prevent damage.

Plastic parts

Using excessive force during disassembly and reassembly can damage plastic parts.

Cables and connectors

Handle cables with extreme care to avoid damage.

IMPORTANT: When servicing the computer, be sure that cables are placed in their proper locations during the reassembly process. Improper cable placement can damage the computer.

Apply only the tension required to unseat or seat the cables during removal and insertion. Handle cables by the connector whenever possible. In all cases, avoid bending, twisting, or tearing cables. Be sure that cables are routed so that they cannot be caught or snagged as you remove or replace parts. Handle flex cables with extreme care; these cables tear easily.

Drive handling

Note the following guidelines when handling drives.

IMPORTANT: Drives are fragile components. Handle them with care. To prevent damage to the computer, damage to a drive, or loss of information, observe these precautions:

- Before removing or inserting a hard drive, shut down the computer. If you are unsure whether the computer is off or in hibernation or sleep mode, turn the computer on, and then shut it down through the operating system.

- Before handling a drive, be sure that you are discharged of static electricity. While handling a drive, avoid touching the connector.
- Before removing an optical drive, be sure that a disc is not in the drive, and be sure that the optical drive tray is closed.
- Handle drives on surfaces covered with at least 2.54 cm (1 inch) of shock-proof foam.
- Avoid dropping drives from any height onto any surface.
- After removing a hard drive or an optical drive, place it in a static-proof bag.
- Avoid exposing an internal hard drive to products that have magnetic fields, such as monitors or speakers.
- Avoid exposing a drive to temperature extremes or liquids.
- If a drive must be mailed, place the drive in a bubble pack mailer or other suitable form of protective packaging, and label the package "FRAGILE."

Electrostatic discharge information

A sudden discharge of static electricity from your finger or other conductor can destroy static-sensitive devices or microcircuitry. Often the spark is neither felt nor heard, but damage occurs. An electronic device exposed to electrostatic discharge (ESD) might not appear to be affected at all and can work perfectly throughout a normal cycle. The device might function normally for a while, but it has been degraded in the internal layers, reducing its life expectancy.

Networks built into many integrated circuits provide some protection, but in many cases, the discharge contains enough power to alter device parameters or melt silicon junctions.

IMPORTANT: To prevent damage to the device when you remove or install internal components, observe these precautions:

- Keep components in their electrostatic-safe containers until you are ready to install them.
- Before touching an electronic component, discharge static electricity by using the guidelines described in Personal grounding methods and equipment on page 26.
- Avoid touching pins, leads, and circuitry. Handle electronic components as little as possible.
- If you remove a component, place it in an electrostatic-safe container.

Generating static electricity

Follow these static electricity guidelines.

- Different activities generate different amounts of static electricity.
- Static electricity increases as humidity decreases.

Table 4-1 Static electricity occurrence based on activity and humidity

Event	55% relative humidity	40% relative humidity	10% relative humidity
Walking across carpet	7500 V	15,000 V	35,000 V
Walking across vinyl floor	3000 V	5000 V	12,000 V
Motions of bench worker	400 V	800 V	6000 V
Removing dual in-line packages (DIPs) from plastic tube	400 V	700 V	2000 V
Removing DIPs from vinyl tray	2000 V	4000 V	11,500 V
Removing DIPs from polystyrene foam	3500 V	5000 V	14,500 V
Removing bubble pack from PCB (printed circuit board)	7000 V	20,000 V	26,500 V
Packing PCBs in foam-lined box	5000 V	11,000 V	21,000 V

NOTE: Multiple electric components can be packaged together in plastic tubes, trays, or polystyrene foam.

NOTE: As little as 700 V of static electricity can degrade a product.

Preventing electrostatic damage to equipment

Many electronic components are sensitive to ESD. Circuitry design and structure determine the degree of sensitivity.

The following packaging and grounding precautions are necessary to prevent static electricity damage to electronic components:

- To avoid hand contact, transport products in static-safe containers such as tubes, bags, or boxes.
- Protect all electrostatic parts and assemblies with conductive or approved containers or packaging.
- Keep electrostatic-sensitive parts in their containers until they arrive at static-free stations.
- Place items on a grounded surface before removing them from their container.
- Always be properly grounded when touching a sensitive component or assembly.
- Avoid contact with pins, leads, or circuitry.
- Place reusable electrostatic-sensitive parts from assemblies in protective packaging or conductive foam.

Personal grounding methods and equipment

Using certain equipment can prevent static electricity damage to electronic components.

- **Wrist straps** are flexible straps with a maximum of 1 MΩ ±10% resistance in the ground cords. To provide proper ground, wear a strap snug against bare skin. Verify that the ground cord is connected and fits snugly into the banana plug connector on the grounding mat or workstation.
- You can use **heel straps, toe straps, and boot straps** at standing workstations. These straps are compatible with most types of shoes or boots. On conductive floors or dissipative floor mats, use them on both feet with a maximum of 1 MΩ ±10% resistance between the operator and ground.

Table 4-2 Static shielding protection levels

Method	Voltage
Antistatic plastic	1500
Carbon-loaded plastic	7500
Metalized laminate	15,000

Grounding the work area

To prevent static damage at the work area, follow these precautions.

- Cover the work surface with approved static-dissipative material.
- Use a wrist strap connected to a properly grounded work surface and use properly grounded tools and equipment.
- Use static-dissipative mats, foot straps, or air ionizers to give added protection.
- Handle electrostatic sensitive components, parts, and assemblies by the case or PCB laminate. Handle them only at static-free work areas.
- Turn off power and input signals before inserting and removing connectors or test equipment.
- Use fixtures made of static-safe materials when fixtures must directly contact dissipative surfaces.
- Keep the work area free of nonconductive materials, such as ordinary plastic assembly aids and polystyrene foam.
- Use conductive field service tools, such as cutters, screwdrivers, and vacuums.
- Avoid contact with pins, leads, or circuitry.

Recommended materials and equipment

HP recommends certain materials and equipment to prevent static electricity.

- Antistatic tape
- Antistatic smocks, aprons, or sleeve protectors
- Conductive bins and other assembly or soldering aids
- Conductive foam
- Conductive tabletop workstations with ground cord of 1 MΩ ±10% resistance
- Static-dissipative table or floor mats with hard tie to ground
- Field service kits
- Static awareness labels
- Wrist straps and footwear straps providing 1 MΩ ±10% resistance
- Material handling packages
- Conductive plastic bags

- Conductive plastic tubes
- Conductive tote boxes
- Opaque shielding bags
- Transparent metallized shielding bags
- Transparent shielding tubes

Cleaning your computer

Cleaning your computer regularly removes dirt and debris so that your device continues to operate at its best. Use the following information to safely clean the external surfaces of your computer.

Enabling HP Easy Clean (select products only)

HP Easy Clean helps you to avoid accidental input while you clean the computer surfaces. This software disables devices such as the keyboard, touch screen, and touchpad for a preset amount of time so that you can clean all computer surfaces.

1. Start HP Easy Clean in one of the following ways:
   - Select the **Start** menu, and then select **HP Easy Clean**.
   - Select the **HP Easy Clean** icon in the taskbar.
   - Select **Start**, and then select the **HP Easy Clean** tile.
2. Now that your device is disabled for a short period, see Removing dirt and debris from your computer on page 28 for the recommended steps to clean the high-touch, external surfaces on your computer. After you remove the dirt and debris, you can also clean the surfaces with a disinfectant. See Cleaning your computer with a disinfectant on page 29 for guidelines to help prevent the spread of harmful bacteria and viruses.

Removing dirt and debris from your computer

Here are the recommended steps to clean dirt and debris from your computer.

For computers with wood veneer, see Caring for wood veneer (select products only) on page 30.

1. Wear disposable gloves made of latex (or nitrile gloves, if you are latex-sensitive) when cleaning the surfaces.
2. Turn off your device and unplug the power cord and other connected external devices. Remove any installed batteries from items such as wireless keyboards.

   CAUTION: To prevent electric shock or damage to components, never clean a product while it is turned on or plugged in.

3. Moisten a microfiber cloth with water. The cloth should be moist, but not dripping wet.

   IMPORTANT: To avoid damaging the surface, avoid abrasive cloths, towels, and paper towels.

4. Wipe the exterior of the product gently with the moistened cloth.

IMPORTANT: Keep liquids away from the product. Avoid getting moisture in any openings. If liquid makes its way inside your HP product, it can cause damage to the product. Do not spray liquids directly on the product. Do not use aerosol sprays, solvents, abrasives, or cleaners containing hydrogen peroxide or bleach that might damage the finish.

5. Start with the display (if applicable). Wipe carefully in one direction, and move from the top of the display to the bottom. Finish with any flexible cables, like power cord, keyboard cable, and USB cables.

6. Be sure that surfaces have completely air-dried before turning the device on after cleaning.

7. Discard the gloves after each cleaning. Clean your hands immediately after you remove the gloves.

See Cleaning your computer with a disinfectant on page 29 for recommended steps to clean the high-touch, external surfaces on your computer to help prevent the spread of harmful bacteria and viruses.

Cleaning your computer with a disinfectant

The World Health Organization (WHO) recommends cleaning surfaces, followed by disinfection, as a best practice for preventing the spread of viral respiratory illnesses and harmful bacteria.

After cleaning the external surfaces of your computer using the steps in Removing dirt and debris from your computer on page 28, Caring for wood veneer (select products only) on page 30, or both, you might also choose to clean the surfaces with a disinfectant. A disinfectant that is within HP's cleaning guidelines is an alcohol solution consisting of 70% isopropyl alcohol and 30% water. This solution is also known as rubbing alcohol and is sold in most stores.

Follow these steps when disinfecting high-touch, external surfaces on your computer:

1. Wear disposable gloves made of latex (or nitrile gloves, if you are latex-sensitive) when cleaning the surfaces.

2. Turn off your device and unplug the power cord and other connected external devices. Remove any installed batteries from items such as wireless keyboards.

CAUTION: To prevent electric shock or damage to components, never clean a product while it is turned on or plugged in.

3. Moisten a microfiber cloth with a mixture of 70% isopropyl alcohol and 30% water. The cloth should be moist, but not dripping wet.

CAUTION: Do not use any of the following chemicals or any solutions that contain them, including spray-based surface cleaners: bleach, peroxides (including hydrogen peroxide), acetone, ammonia, ethyl alcohol, methylene chloride, or any petroleum-based materials, such as gasoline, paint thinner, benzene, or toluene.

IMPORTANT: To avoid damaging the surface, avoid abrasive cloths, towels, and paper towels.

4. Wipe the exterior of the product gently with the moistened cloth.

IMPORTANT: Keep liquids away from the product. Avoid getting moisture in any openings. If liquid makes its way inside your HP product, it can cause damage to the product. Do not spray liquids directly on the product. Do not use aerosol sprays, solvents, abrasives, or cleaners containing hydrogen peroxide or bleach that might damage the finish.

5. Start with the display (if applicable). Wipe carefully in one direction, and move from the top of the display to the bottom. Finish with any flexible cables, like power cord, keyboard cable, and USB cables.
6. Be sure that surfaces have completely air-dried before turning the device on after cleaning.
7. Discard the gloves after each cleaning. Clean your hands immediately after you remove the gloves.

Caring for wood veneer (select products only)

Your product might feature high-quality wood veneer. As with all natural wood products, proper care is important for best results over the life of the product. Because of the nature of natural wood, you might see unique variations in the grain pattern or subtle variations in color, which are normal.

- Clean the wood with a dry, static-free microfiber cloth or chamois.
- Avoid cleaning products containing substances such as ammonia, methylene chloride, acetone, turpentine, or other petroleum-based solvents.
- Do not expose the wood to sun or moisture for long periods of time.
- If the wood becomes wet, dry it by dabbing with an absorbent, lint-free cloth.
- Avoid contact with any substance that might dye or discolor the wood.
- Avoid contact with sharp objects or rough surfaces that might scratch the wood.

See Removing dirt and debris from your computer on page 28 for the recommended steps to clean the high-touch, external surfaces on your computer. After you remove the dirt and debris, you can also clean the surfaces with a disinfectant. See Cleaning your computer with a disinfectant on page 29 for sanitizing guidelines to help prevent the spread of harmful bacteria and viruses.

Packaging and transporting guidelines

Follow these grounding guidelines when packaging and transporting equipment.

- To avoid hand contact, transport products in static-safe tubes, bags, or boxes.
- Protect ESD-sensitive parts and assemblies with conductive or approved containers or packaging.
- Keep ESD-sensitive parts in their containers until the parts arrive at static-free workstations.
- Place items on a grounded surface before removing items from their containers.
- Always be properly grounded when touching a component or assembly.
- Store reusable ESD-sensitive parts from assemblies in protective packaging or nonconductive foam.
- Use transporters and conveyors made of antistatic belts and roller bushings. Be sure that mechanized equipment used for moving materials is wired to ground and that proper materials are selected to avoid static charging. When grounding is not possible, use an ionizer to dissipate electric charges.

Accessing support information

Use this information to find the HP support that you need.

Table 4-3 Support information locations

Service consideration	Path to access information
Records of reported failure incidents stored on the computer	**Windows:** Pre-operating system failures are logged in the BIOS Event Log. To view the BIOS Event Log: 1. Press the power button. 2. Immediately and repeatedly press esc when the power button light turns white. **NOTE:** If you do not press esc at the appropriate time, you must restart the computer and again repeatedly press esc when the power button light turns white to access the utility. 3. Press f10 to enter the BIOS setup. 4. Complete one of these tasks: • (On commercial products) Under the **Main** tab, select **BIOS event log**, and then select **View BIOS Event Log**. • (On consumer products) Under the **Main** tab, select **System Log**. Post-operating system failures are logged in the Event Viewer. 1. Turn on the computer and allow the operating system to open. 2. Select the search icon in the taskbar. 3. Type `Event Viewer`, and then press enter. 4. Select the log from the left panel. Details display in the right panel. **ChromeOS™:** 1. Go to support.google.com/chrome. 2. Search `collect Chrome device logs`.
Technical bulletins and alerts	To find technical bulletins, alerts, guides, and whitepapers: 1. Go to www.hp.com/support. 2. Follow the instructions to find your product. 3. Select **Bulletins and Alerts** to view technical bulletins.
Repair professionals	To locate repair professionals: 1. Go to www.hp.com. 2. Select **Authorized service providers**. 3. Select your location.
Component and diagnosis information, failure detection, and required action	To locate diagnosis information and actions: 1. Go to http://www.hp.com/go/techcenter/pcdiags. 2. Select the issue you want to diagnose.

5 Removal and replacement procedures for Customer Self-Repair parts

This chapter provides removal and replacement procedures for Customer Self-Repair parts.

NOTE: The Customer Self-Repair program is not available in all locations. Installing a part that is not supported by the Customer Self-Repair program can void your warranty. Check your warranty to determine whether Customer Self-Repair is supported in your location.

NOTE: The HP Support YouTube Channel (in English) has videos that provide step-by-step removal and replacement instructions for many common parts and models.

Component replacement procedures

Use these procedures to remove and replace computer components.

NOTE: Details about your computer, including model, serial number, product key, and length of warranty, are on the service tag at the bottom of your computer.

NOTE: HP continually improves and changes product parts. For complete and current information about supported parts for your computer, go to https://partsurfer.hp.com/, select your country or region, and then follow the on-screen instructions.

Make special note of each screw size and location during removal and replacement.

Preparation for disassembly

Use these procedures to remove and replace computer components.

For initial safety procedures, see Removal and replacement procedures preliminary requirements on page 24.

1. Turn off the computer. If you are unsure whether the computer is off or in hibernation or sleep mode, turn the computer on, and then shut it down through the operating system.
2. Disconnect the power from the computer by unplugging the power cord from the computer.
3. Disconnect all external devices from the computer.

Bottom cover

Use this procedure and illustration to remove the bottom cover.

Table 5-1 Bottom cover descriptions and part numbers

Description	Spare part number
For use in models with AMD Ryzen 7 H 255/Ryzen 7 260/Ryzen 5 240 processors	P79795-001
For use in models with AMD Ryzan AI/Ryzen 9 8945HX/Ryzen 9 8940HX/Ryzen 7 8745HX processors	P79795-002

Before removing the bottom cover, prepare the computer for disassembly (see Preparation for disassembly on page 32).

Remove the bottom cover:

NOTE: On select models, the screws are installed at an angle. Note the orientation before removal and installation.

1. Position the computer upside down.
2. (140 W models) Remove the two screw covers **(1)**.

   NOTE: Screw covers are only used on select 140 W models.

3. Remove the three Phillips M2.0 × 5.0 screws **(2)** from the bottom cover.
4. Remove the Phillips M2.0 × 9.5 screw (70 W models) **(3)** or Phillips M2.0 × 14.0 screw (140 W models) **(3)** from the bottom cover.
5. Loosen the captive Phillips screw **(4)** on the bottom cover.

   NOTE: The bottom cover includes a captive (not removable) screw that causes the cover to pop up when you loosen the screw. After the cover pops up, do not continue to loosen the captive screw.

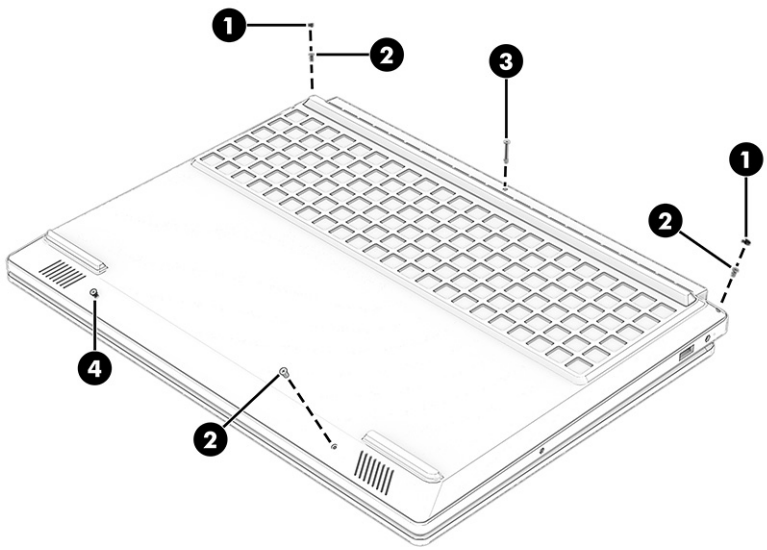

6. Insert a tool **(1)** into the seam near the captive screw to release the bottom cover.

   NOTE: If you are unable to insert a tool into the seam, you can flex the corners of the bottom cover to release it from the computer.

7. Use the tool to release all sides **(2)** of the bottom cover to remove it from the computer.

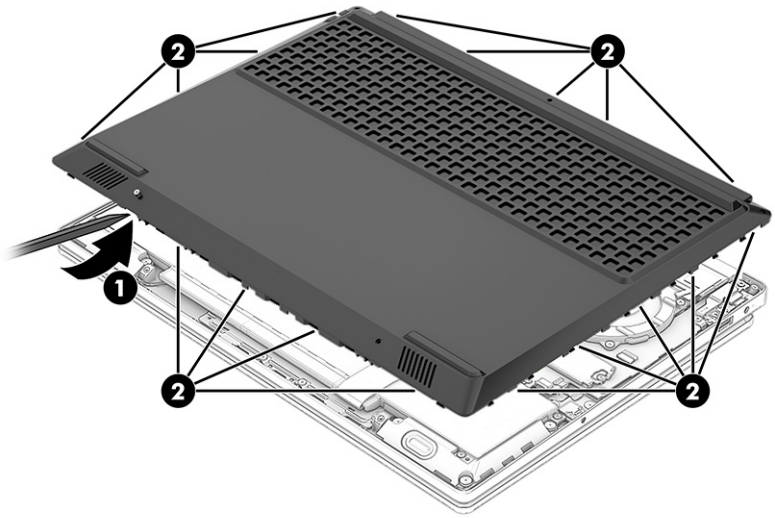

Reverse the removal procedures to replace the bottom cover.

On 140 W models, after installing the bottom cover, be sure to install the rubber covers over the screws by inserting the tip **(1)** on the screw cover into the hole **(2)** above the installed screw.

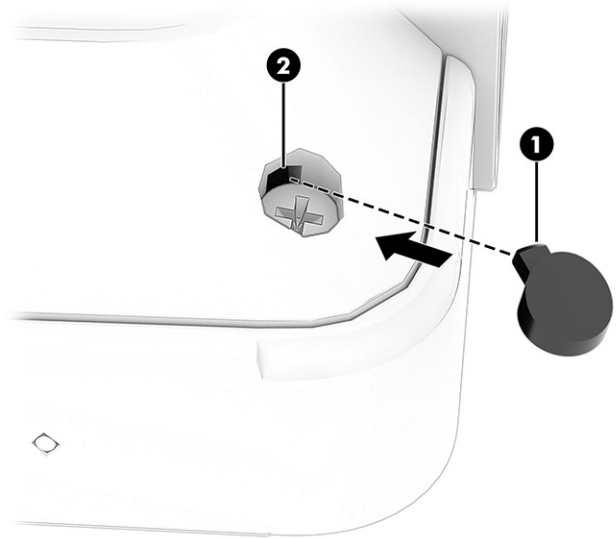

When replacing the bottom cover, remove the Feature Byte label from the inside of the old bottom cover and place it on the inside of the new bottom cover. Be sure to keep this label with the computer, because the label is required for any future repairs.

You can locate product labels:

- Laser etched on the old bottom cover.

- In HP System Information by pressing fn + esc when you turn on the computer.

NOTE: Bottom cover appearance might vary.

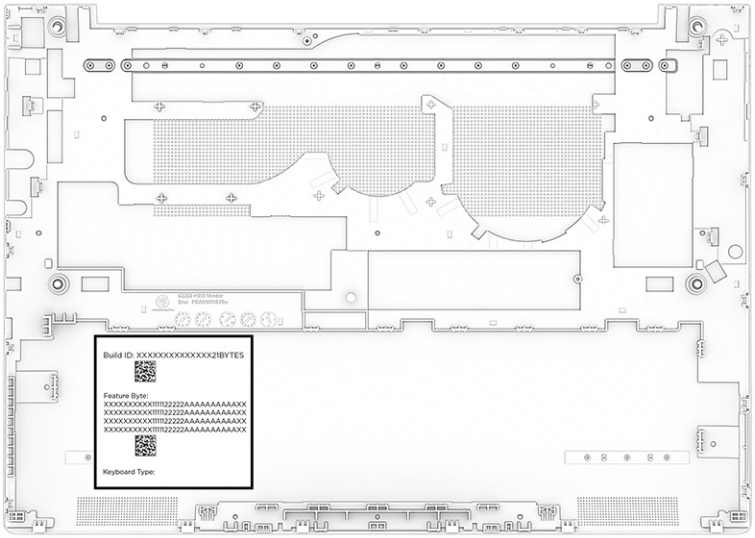

Hand write the product information onto the label of the new bottom cover. Use a ballpoint pen or marker to avoid smudging.

Example of label information

New bottom cover label location

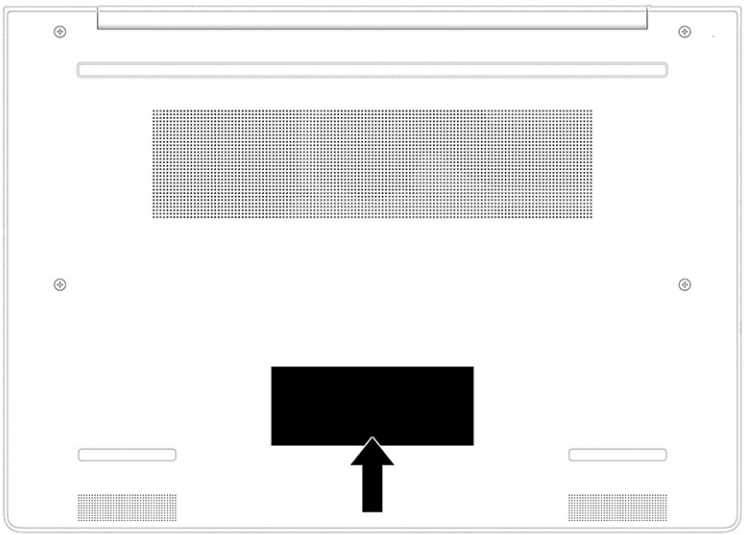

Battery

The battery removal procedure differs depending on whether you are removing and replacing the existing battery or installing a new battery. You must use a revive kit to install a new battery.

- To remove and replace the existing battery, see Removing and reinstalling the same battery on page 36.
- To install a new battery, see Installing a new battery on page 38.

Removing and reinstalling the same battery

Use these procedures and illustrations to remove the battery and reinstall it.

⚠ **WARNING!** To avoid personal injury and damage to the product:

- Do *not* puncture, twist, or crack the battery.
- Do *not* cause an external puncture or rupture to the battery, which can cause a short inside the battery that can result in battery thermal runaway.
- Do *not* handle or touch the battery enclosure with sharp objects such as tweezers or pliers, which might puncture the battery.
- Do *not* compress or squeeze the battery case with tools or heavy objects stacked on top of the case. These actions can apply undue force on the battery.
- Do *not* touch the connectors with any metallic surface or object, such as metal tools, screws, or coins, which can cause shorting across the connectors.

For additional battery information, see the *Regulatory, Safety, and Environmental Notices*. To access this guide, select the **Search** icon in the taskbar, type `HP Documentation` in the search box, and then select **HP Documentation**.

Before removing the battery, follow these steps:

1. Prepare the computer for disassembly (see Preparation for disassembly on page 32).

2. Remove the bottom cover (see Bottom cover on page 32).

WARNING! To reduce potential safety issues, use only the user-replaceable battery provided with the computer, a replacement battery provided by HP, or a compatible battery purchased from HP.

IMPORTANT: Removing a battery that is the sole power source for the computer can cause loss of information. To prevent loss of information, save your work or shut down the computer through Windows before you remove the battery.

Remove the battery:

1. Remove the five Phillips M2.0 × 4.0 screws **(1)** that secure the battery to the computer.
2. Pull the battery cable out of the connector **(2)** on the system board.
3. Remove the battery **(3)** from the computer.

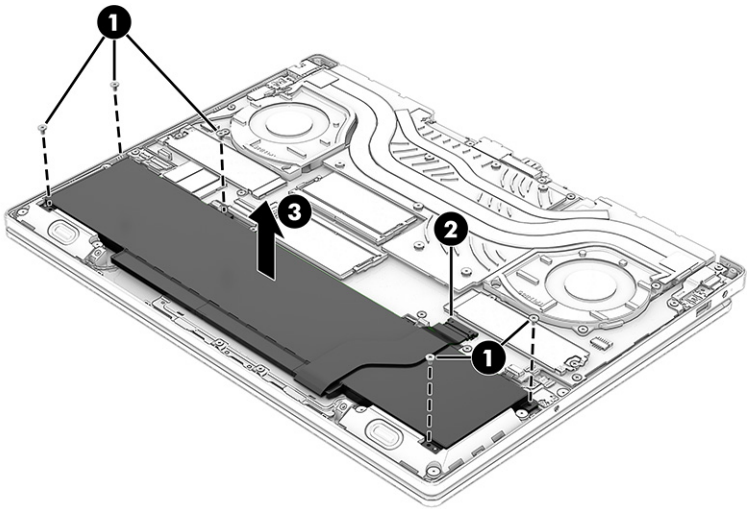

4. To remove the battery cable from the battery, pull it out of the connector on the battery.

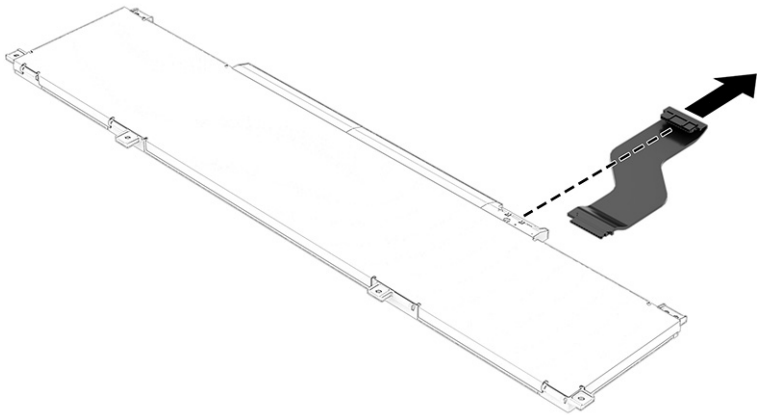

Reverse the removal procedures to reinstall the battery.

NOTE: When replacing the battery, be sure to completely reassemble the computer and plug in the AC adapter before turning the computer on.

Installing a new battery

Use these procedures and illustrations to install a battery. You must use a revive kit to remove the old battery and install a new one. The revive kit includes an empty containment tray and a containment tray with a battery preinstalled.

Table 5-2 Battery description and part number

Description	Spare part number
Battery (includes revive kit)	P08167-001

Before starting this replacement procedure:

- Ensure other individuals are sufficiently clear of your workspace.
- Ensure your workspace is clear of any flammable material such as paper or oils.
- Locate the nearest ABC dry chemical fire extinguisher for use in an emergency.

WARNING! This procedure requires removing the battery or disconnecting the battery cable. Use care to avoid bending, twisting, or puncturing the battery regardless of its condition. Failure to follow this replacement guide or to use HP recommended tools might damage the system and/or cause a safety hazard.

- Do *not* remove the battery from the containment tray.
- Do *not* handle or touch the battery enclosure with sharp objects such as tweezers or pliers, which might puncture the battery.
- Do *not* touch the connectors with any metallic surface or object, such as metal tools, screws, or coins, which can cause shorting across the connectors.

Should a part become stuck or difficult to remove when opening a unit where a swollen battery is suspected, or if the battery becomes stuck in the unit, stop, and contact HP Support for assistance. Do not try to remove a battery by force.

NOTE: Screw locations, latch locations, and internal components might vary.

Before removing the battery, follow these steps:

1. Prepare the computer for disassembly (see Preparation for disassembly on page 32).
2. Remove the bottom cover (see Bottom cover on page 32).

WARNING! To reduce potential safety issues, use only the user-replaceable battery provided with the computer, a replacement battery provided by HP, or a compatible battery purchased from HP.

IMPORTANT: Removing a battery that is the sole power source for the computer can cause loss of information. To prevent loss of information, save your work or shut down the computer through Windows before you remove the battery.

1. Remove the battery using the revive kit:

   a. Disconnect the battery cable from the system board. The connector location might vary.

   NOTE: You can disconnect the cable from the battery. The battery spare part kit does not come with the battery cable, so be sure to use the old battery cable or order a new battery cable when replacing the battery.

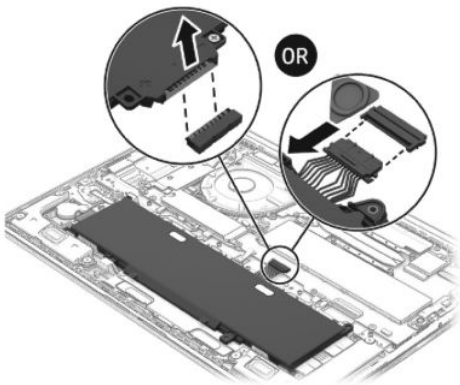

   b. Open the empty battery containment tray.

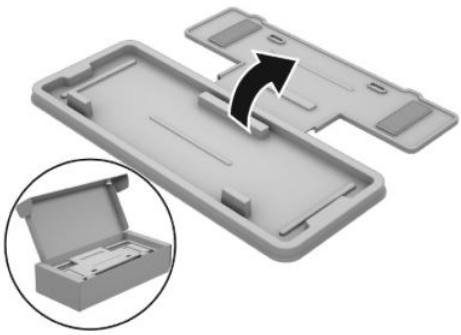

c. Remove the paper backing layer from the adhesive on the tray.

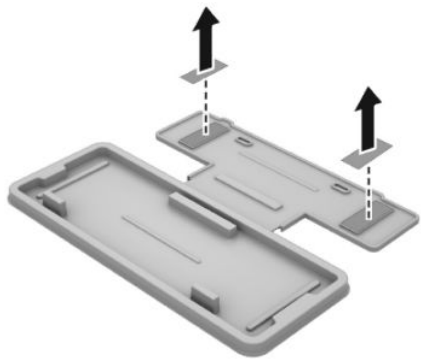

d. Turn the tray **(1)** over so that the adhesive is facing down.

e. Place the tray **(2)** centered on the battery.

f. Press down on the indentations on the tray **(3)** to adhere it to the battery.

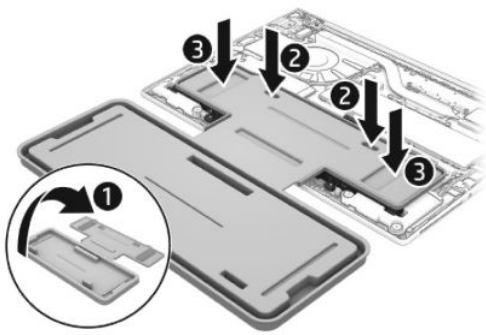

g. Remove the Phillips screws **(1)** that secure the battery to the computer. Number of screws and screw locations might vary.

h. Lift the top of the tray **(2)** to remove the battery from the computer.

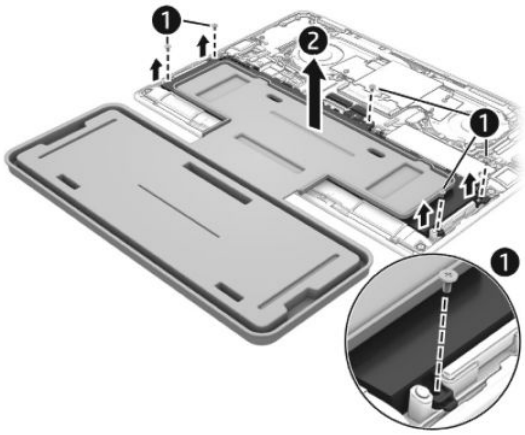

i. Rotate the battery up and over into the cavity of the containment tray.

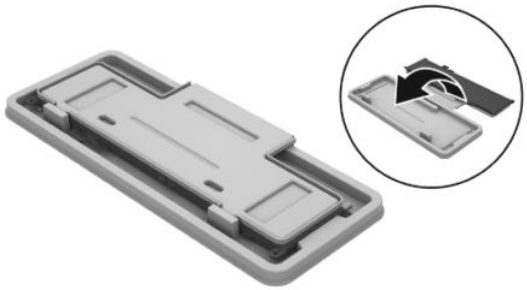

NOTE: Please recycle responsibly. For more information about recycling programs, see the HP website at http://www.hp.com/recycle.

2. Install the battery using the revive kit:

   a. Open the containment tray that includes the new battery.

b. Turn the tray **(1)** over so the battery is facing downward, and then insert the battery **(2)** into the computer. Adhesive secures the battery to the tray.

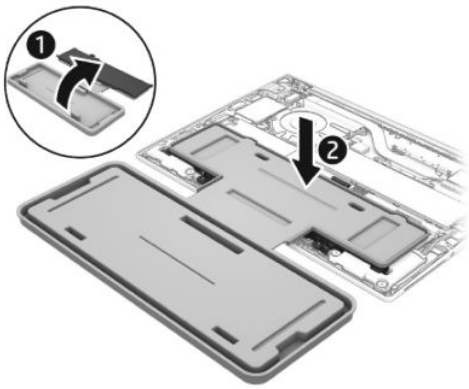

c. Install the Phillips screws **(1)** to secure the battery. Number of screws and screw locations might vary.

d. Lift the containment tray **(2)** off the battery.

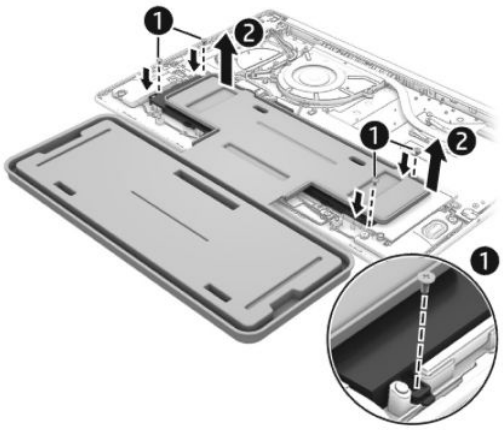

e. Connect the battery cable to the system board. The connector location might vary.

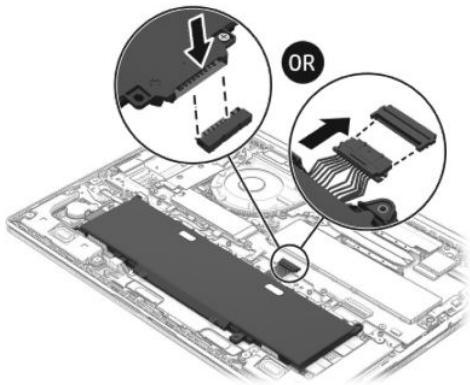

NOTE: When replacing the battery, be sure to completely reassemble the computer and plug in the AC adapter before turning the computer on.

Memory modules

Use this procedure and illustration to remove the memory modules.

Table 5-3 Memory module descriptions and part numbers

Description	Spare part number
24 GB	P55196-001
16 GB	N77399-001
8 GB	N77398-001

Before removing the memory, follow these steps:

1. Prepare the computer for disassembly (see Preparation for disassembly on page 32).
2. Remove the bottom cover (see Bottom cover on page 32).
3. Disconnect the battery cable from the system board (see Removing and reinstalling the same battery on page 36).

If you are replacing a memory module, remove the existing memory module:

1. Lift (do not remove) the protective covering **(1)** so you can access the modules.
2. Spread the two retention clips outward **(2)** until the memory module tilts up at a 45° angle, and then remove the module **(3)**.

IMPORTANT: To prevent damage to the memory module, hold the memory module by the edges only. Do not touch the components on the memory module.

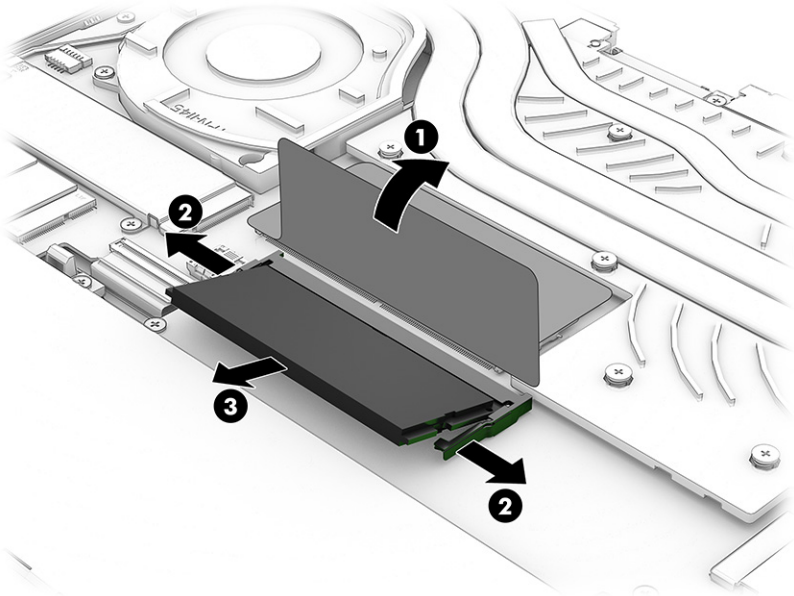

NOTE: To protect a memory module after removal, place it in an electrostatic-safe container.

Reverse the removal procedures to install a memory module.

When installing memory modules, use the following illustration to determine which slot is primary **(1)** and which slot is secondary **(2)**.

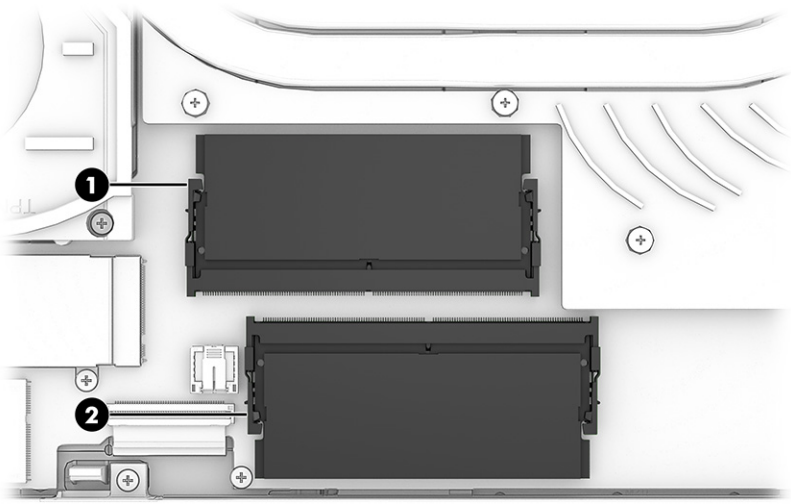

Solid-state drive

Use this procedure and illustration to remove the SSD.

Table 5-4 SSD descriptions and part numbers

Description	Spare part number
1 TB, Gen4	N77394-001

Table 5-4 SSD descriptions and part numbers (continued)

Description	Spare part number
1 TB, Gen5	P73030-001
512 GB, Gen4	N77392-001
512 GB, Gen5	P73029-001

Before removing the SSD, follow these steps:

1. Prepare the computer for disassembly (see Preparation for disassembly on page 32).
2. Remove the bottom cover (see Bottom cover on page 32).
3. Disconnect the battery cable from the system board (see Removing and reinstalling the same battery on page 36).

Remove the SSD:

1. Remove the two Phillips M2.0 × 3.0 screws **(1)** that secure the SSD cover.
2. Pull the cover **(2)** off the SSD.

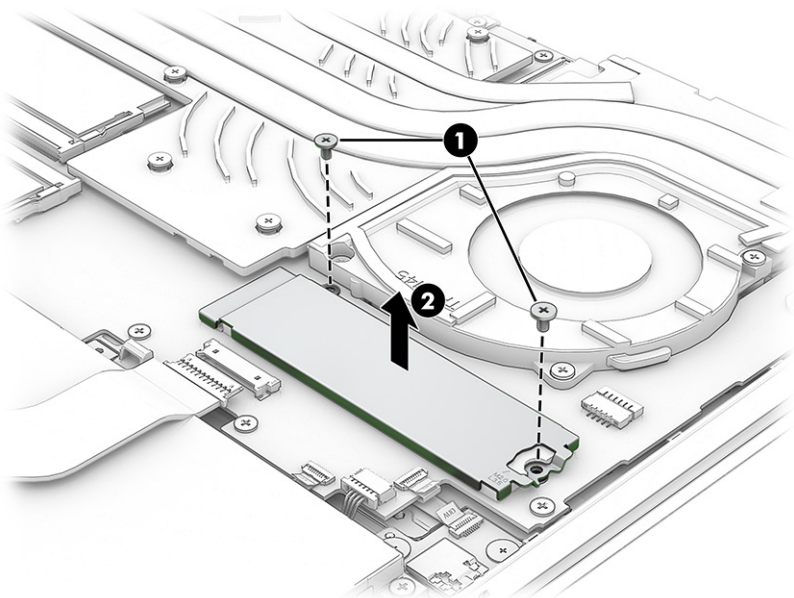

3. Pull the SSD out of the socket.

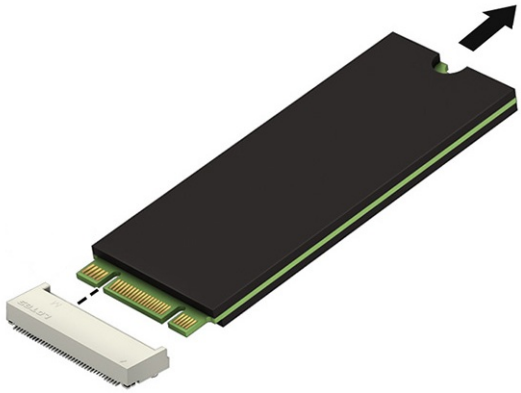

Reverse the removal procedures to install an SSD.

When installing an SSD, be sure a thermal pad is installed on the bottom of the SSD cover.

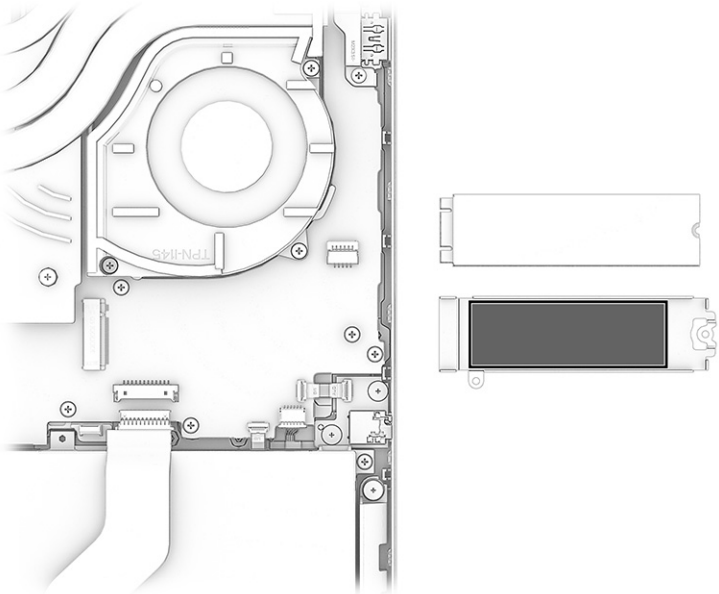

NOTE: SSDs are designed with a notch to prevent incorrect insertion.

When installing SSDs, note the locations of the primary drive **(1)** and the secondary drive **(2)**.

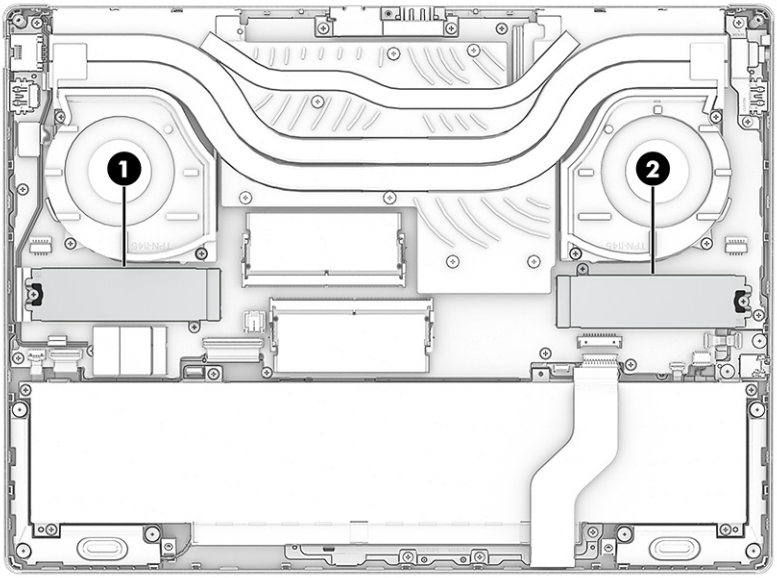
1
2

6 Removal and replacement procedures for authorized service provider parts

This chapter provides removal and replacement procedures for authorized service provider parts.

IMPORTANT: Only an authorized service provider should access the components described in this chapter. Accessing these parts can damage the computer or void the warranty.

NOTE: Details about your computer, including model, serial number, product key, and length of warranty, are on the service tag at the bottom of your computer.

NOTE: The HP Support YouTube Channel (in English) has videos that provide step-by-step removal and replacement instructions for many common parts and models.

Component replacement procedures

Use the procedures described in this section to remove and replace computer components.

NOTE: HP continually improves and changes product parts. For complete and current information about supported parts for your computer, go to https://partsurfer.hp.com/, select your country or region, and then follow the on-screen instructions.

Make special note of each screw size and location during removal and replacement.

WLAN module

Use this procedure and illustration to remove the WLAN module.

Table 6-1 WLAN module descriptions and part numbers

Description	Spare part number
Realtek Wi-Fi 6 RTL8852BE-VT + Bluetooth 5.4	P06350-005
MediaTek Wi-Fi 7 MT7925 + Bluetooth 6.0	N64647-005

IMPORTANT: To prevent an unresponsive system, replace the wireless module only with a wireless module authorized for use in the computer by the governmental agency that regulates wireless devices in your country or region. If you replace the module and then receive a warning message, remove the module to restore device functionality, and then contact technical support.

Before removing the WLAN module, follow these steps:

1. Prepare the computer for disassembly (Preparation for disassembly on page 32).
2. Remove the bottom cover (see Bottom cover on page 32).
3. Disconnect the battery cable from the system board (see Removing and reinstalling the same battery on page 36).

Remove the WLAN module:

1. Remove the antenna protector **(1)** from the module.
2. Disconnect the antenna cables **(2)** from the module terminals.
3. Remove the Phillips M2.0 × 3.0 screw **(3)** that secures from the WLAN module.
4. Remove the module **(4)** by pulling it away from the slot at an angle.

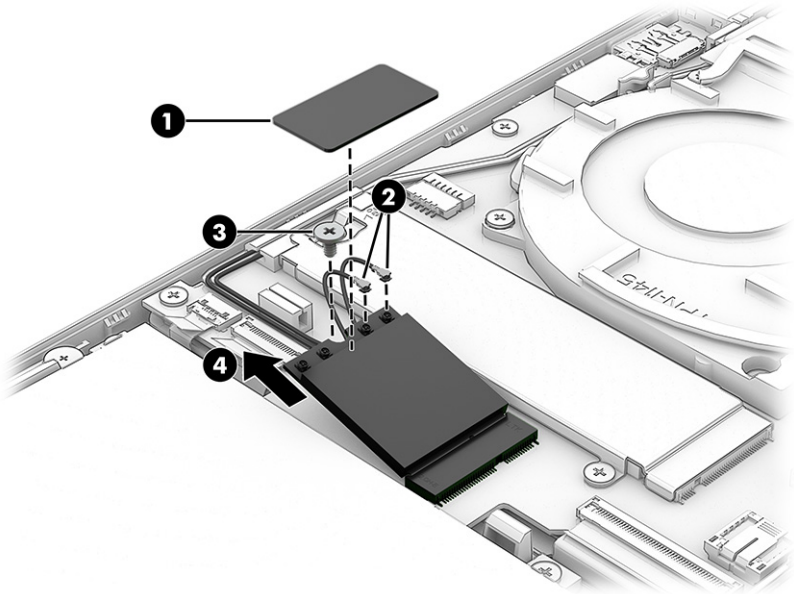

5. If the WLAN antenna is not connected to the terminal on the WLAN module, install a protective sleeve on the antenna connector, as shown in the following illustration.

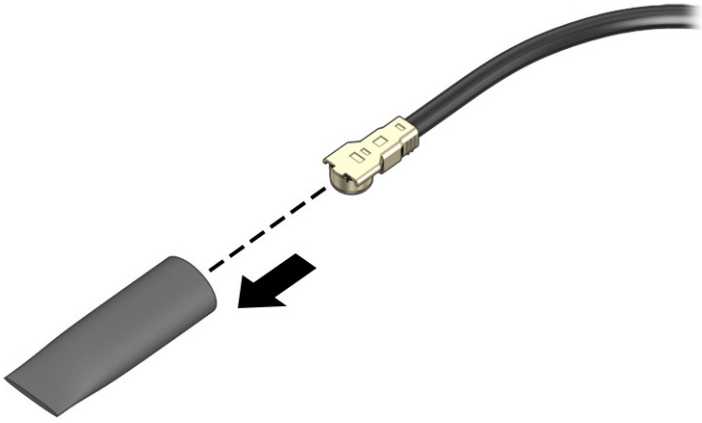

Reverse this procedure to install the WLAN module.

NOTE: WLAN modules are notched to prevent incorrect installation.

Audio board

Use this procedure and illustration to remove the audio board.

Table 6-2 Audio board description and part number

Description	Spare part number
Audio board (includes cable)	P79796-001

Before removing the audio board, follow these steps:

1. Prepare the computer for disassembly (see Preparation for disassembly on page 32).
2. Remove the bottom cover (see Bottom cover on page 32).
3. Disconnect the battery cable from the system board (see Removing and reinstalling the same battery on page 36).

Remove the audio board:

1. Disconnect the ZIF connector **(1)** from the audio board.
2. Remove the two Phillips 2.5 × 2.5 screws **(2)** from the board.
3. Lift the inside of the board **(3)** up, and then pull the board **(4)** up and into the computer to remove it.

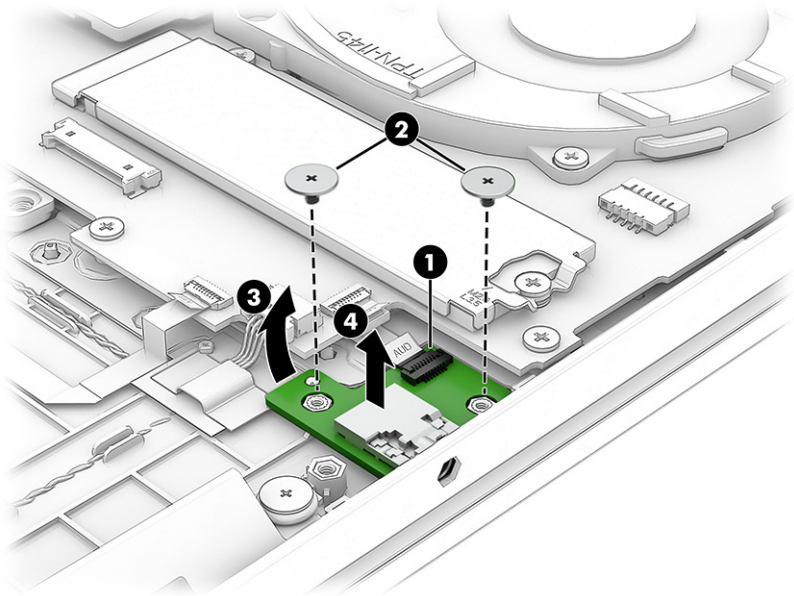

Reverse this procedure to install the audio board.

Speakers

Use this procedure and illustration to remove the speakers.

Table 6-3 Speaker description and part number

Description	Spare part number
Speakers (left and right)	P79800-001

Before removing the speakers, follow these steps:

1. Prepare the computer for disassembly (see Preparation for disassembly on page 32).
2. Remove the bottom cover (see Bottom cover on page 32).
3. Remove the battery (see Removing and reinstalling the same battery on page 36).

Remove the speakers:

1. Remove the plastic cover **(1)** from the touchpad connector on the system board.
2. Disconnect the touchpad cable **(2)** from the system board.
3. Disconnect the speaker cable **(3)** from the system board.
4. Remove the speaker cable from the clips and tape **(4)** that secure it to the computer.
5. Remove the six Phillips M2.0 × 2.5 screws **(5)** that secure the speakers.
6. Remove the speakers **(6)** from the computer.

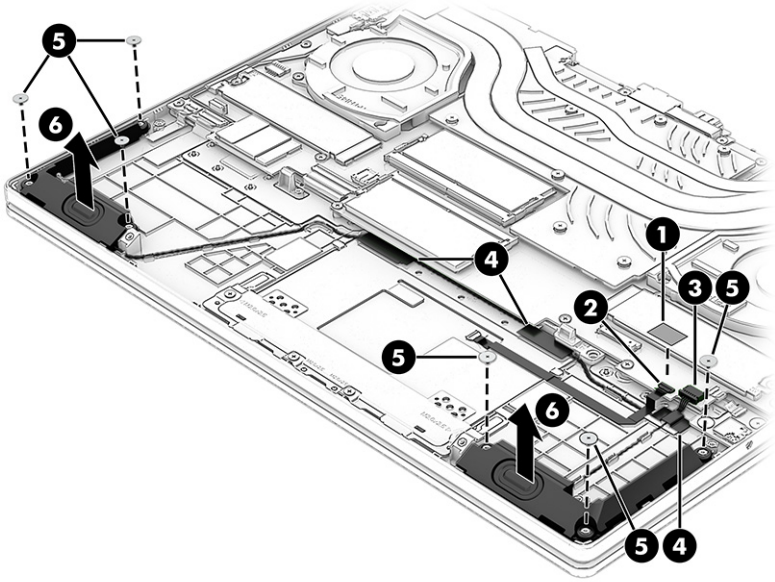

Reverse this procedure to install the speakers.

When installing the speakers, be sure to route the cables through the clips shown in the following illustration.

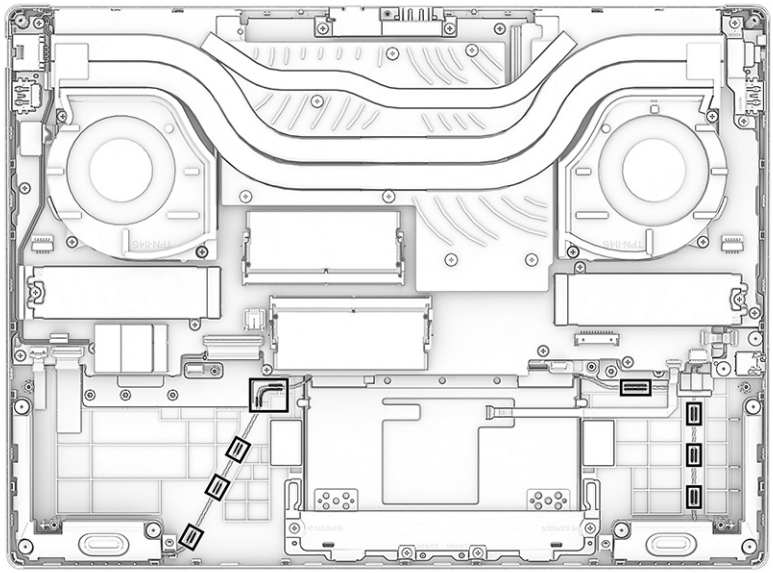

Heat sink

Use these procedures and illustrations to remove the heat sink.

Table 6-4 Heat sink descriptions and part numbers

Description	Spare part number
Heat sink (Ryzen 7 H 255, Ryzen 7 260, Ryzen 5 240 processors)	P79807-001
Heat sink (Ryzen AI 7 450 processors)	P79807-003
Thermal grease and gap filler	P40959-001

Before removing the heat sink, follow these steps:

1. Prepare the computer for disassembly (see Preparation for disassembly on page 32).
2. Remove the bottom cover (see Bottom cover on page 32).
3. Disconnect the battery cable from the system board (see Removing and reinstalling the same battery on page 36).

Remove the heat sink from 70 W models:

1. In the order shown on the heat sink, loosen the seven captive Phillips screws **(1)** from the heat sink.
2. Remove one Phillips M2.0 × 2.3 screw **(2)** from each fan that also secures the heat sink.
3. Remove the heat sink **(3)**.

   70 W models

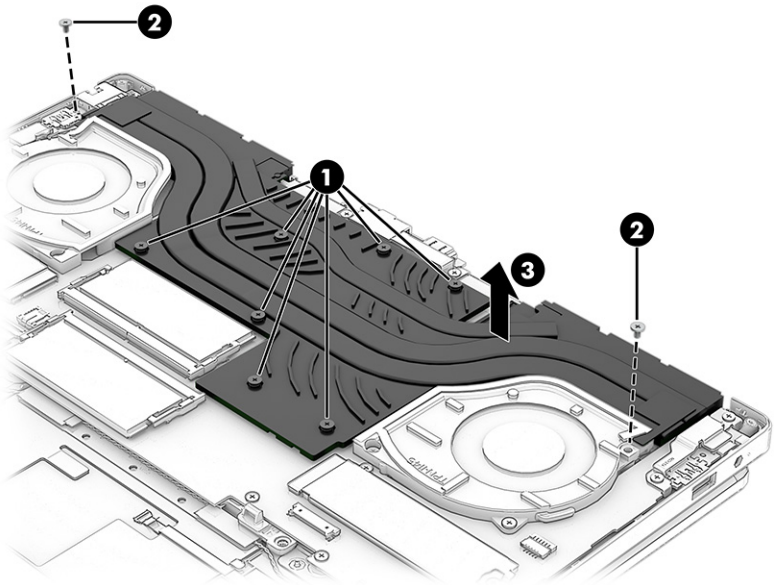

140 W models

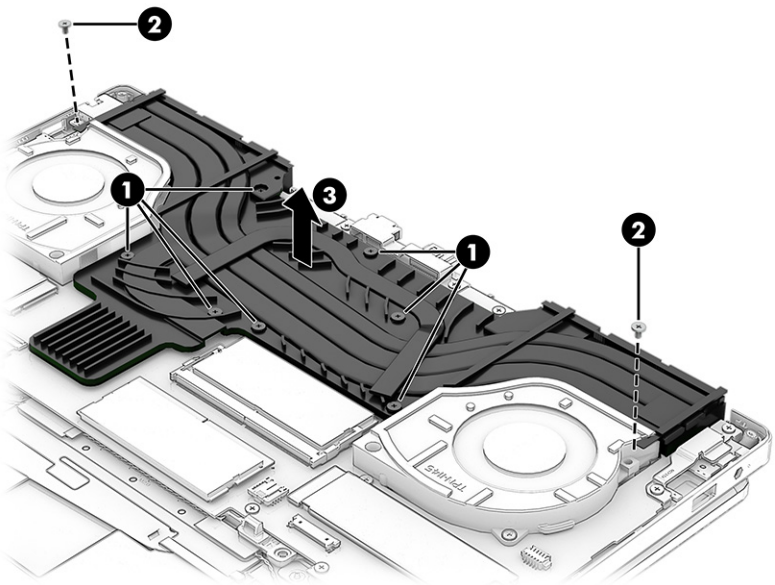

4. Thoroughly clean and replace the gray thermal grease **(1)** and white thermal paste **(2)** on the heat sink each time it is removed.

   Each time the heat sink is removed, thoroughly clean and replace the gray thermal grease from the surface of the heat sink and system board. Remember to reapply on the heat sink instead of on the system board. Thoroughly clean the gray and white thermal grease from the system boards that you plan to recycle, because the grease will no longer be in a sealed space and might move around then get stuck in the components on the system boards causing permanent damage.

   70 W models

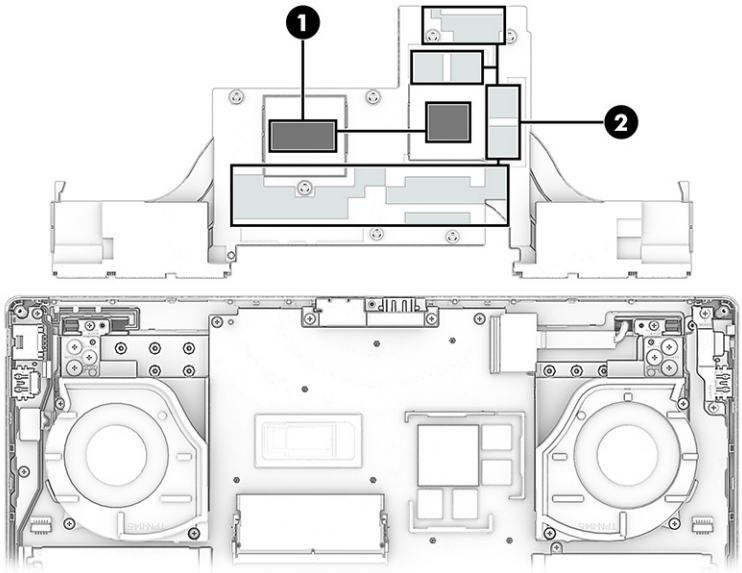

140 W models

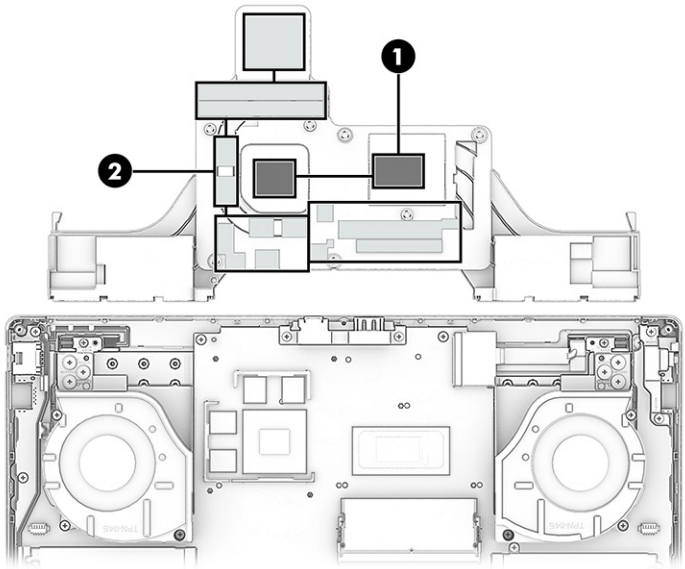

Reverse this procedure to install the heat sink.

Fans

Use this procedure and illustration to remove the fans.

Table 6-5 Fan descriptions and part numbers

Description	Spare part number
Fans	P79805-001

Before removing the fans, follow these steps:

1. Prepare the computer for disassembly (see Preparation for disassembly on page 32).
2. Remove the bottom cover (see Bottom cover on page 32).
3. Disconnect the battery cable from the system board (see Removing and reinstalling the same battery on page 36).
4. Remove the heat sink (see Heat sink on page 52).

Remove the fans:

1. Remove the antenna cables from the clip **(1)** on the left fan.
2. Disconnect the fan cables **(2)** from the system board.
3. Remove two Phillips M2.0 × 4.0 screws **(3)** from each fan.
4. Lift the fans **(4)** out of the computer.

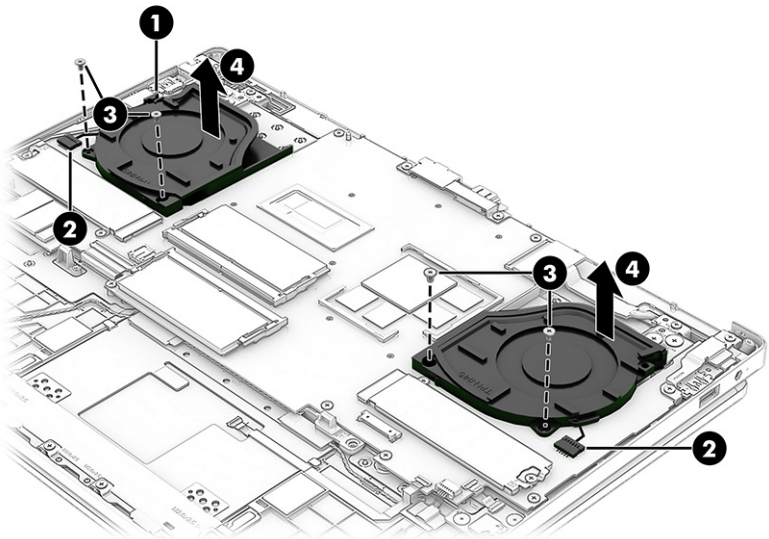

Reverse this procedure to install the fans.

System board

Use these procedures and illustrations to remove the system board.

Table 6-6 System board descriptions and part numbers

Description	Spare part number
AMD Ryzen AI 7 450 processor and NVIDIA GeForce RTX 5060 graphics	P78810-601
AMD Ryzen H 255 processor and NVIDIA GeForce RTX 5060 graphics (PRC)	P78817-601
AMD Ryzen H 255 processor and NVIDIA GeForce RTX 5050 graphics (PRC)	P78816-601
AMD Ryzen 7 260 processor and NVIDIA GeForce RTX 5060 graphics	P78808-601
AMD Ryzen 7 260 processor and NVIDIA GeForce RTX 5050 graphics	P78805-601
AMD Ryzen 5 240 processor and NVIDIA GeForce RTX 5060 graphics	P78807-601
AMD Ryzen 5 240 processor and NVIDIA GeForce RTX 5050 graphics	P78804-601

Table 6-6 System board descriptions and part numbers (continued)

Description	Spare part number
AMD Ryzen 9 8940HX processor and NVIDIA GeForce RTX 5060 graphics	P78813-601
AMD Ryzen 9 8945HX processor and NVIDIA GeForce RTX 5060 graphics (PRC)	P78819-601
AMD Ryzen 7 8745HX processor and NVIDIA GeForce RTX 5060 graphics	P78812-601
AMD Ryzen 7 8745HX processor and NVIDIA GeForce RTX 5060 graphics (PRC)	P79839-601
AMD Ryzen 7 8945HX processor and NVIDIA GeForce RTX 5050 graphics	P78811-601
AMD Ryzen 7 8945HX processor and NVIDIA GeForce RTX 5050 graphics (PRC)	P78818-601

Before removing the system board, follow these steps:

1. Prepare the computer for disassembly (see Preparation for disassembly on page 32).
2. Remove the bottom cover (see Bottom cover on page 32).
3. Disconnect the battery cable from the system board (see Removing and reinstalling the same battery on page 36).
4. Remove the memory modules (see Memory modules on page 43).
5. Remove the SSD (see Solid-state drive on page 44).
6. Remove the WLAN module (see WLAN module on page 48).
7. Remove the heat sink (see Heat sink on page 52).
8. Remove the fans (see Fans on page 54).

Remove the system board:

1. Disconnect the following cables from the system board:
   - Display cable (ZIF) **(1)**
   - Audio board cable (ZIF) **(2)**
   - Speaker cable **(3)**
   - Touchpad cable (ZIF) **(4)**
   - Keyboard cable (ZIF) **(5)**
   - Keyboard 4-light backlight cable (ZIF) **(6)** (select products only)
   - Keyboard 1-light backlight cable (ZIF) **(7)** (select products only)

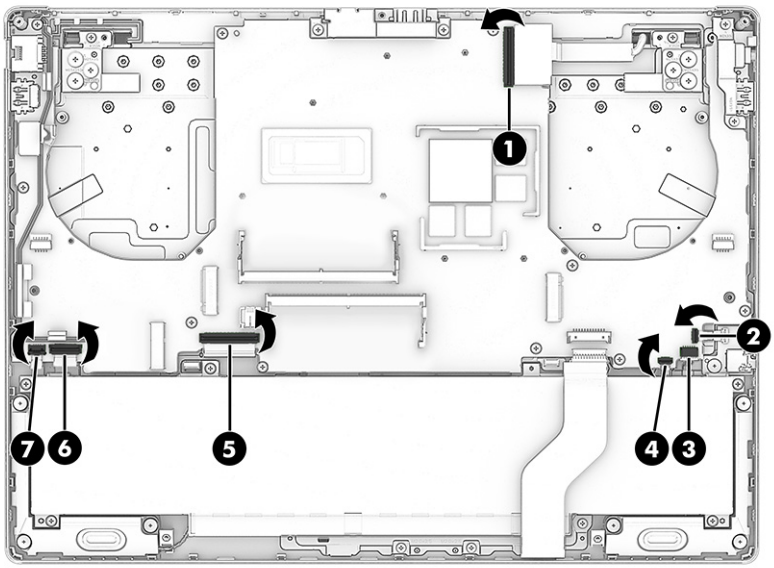

2. Remove the four silver Phillips M2.0 × 3.5 screws **(1)** from the brackets on the system board.
3. Remove the nine black Phillips M2.0 × 3.5 screws **(2)** from the system board.
4. Remove the brackets **(3)** from the system board.
5. Remove the system board **(4)** from the computer.

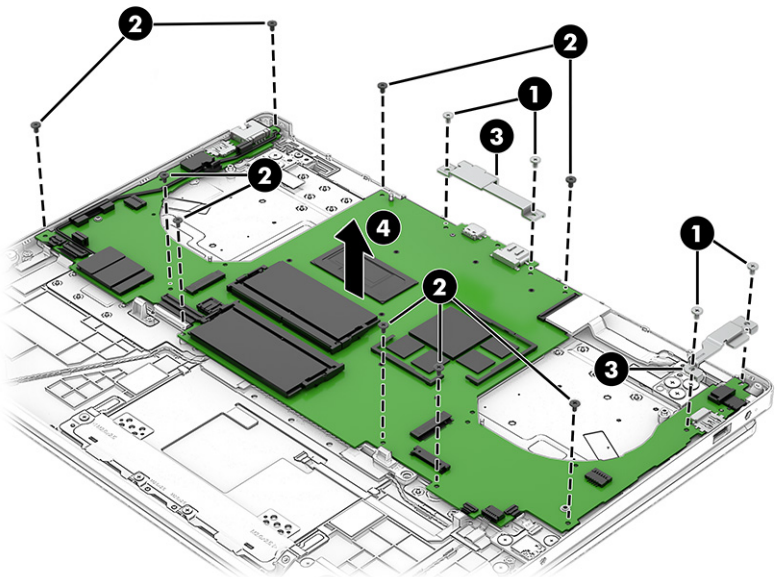

Reverse this procedure to install a system board.

Touchpad

Use this procedure and illustration to remove the touchpad.

Table 6-7 Touchpad description and part number

Description	Spare part number
Touchpad (includes cable)	P79802-001

Before removing the touchpad, follow these steps:

1. Prepare the computer for disassembly (see Preparation for disassembly on page 32).
2. Remove the bottom cover (see Bottom cover on page 32).
3. Remove the battery (see Removing and reinstalling the same battery on page 36).
4. Remove the system board (see System board on page 55).

Remove the touchpad:

1. Remove the four Phillips M2.0 × 2.5 screws **(1)** from the touchpad bracket.
2. Remove the bracket **(2)** from the computer.

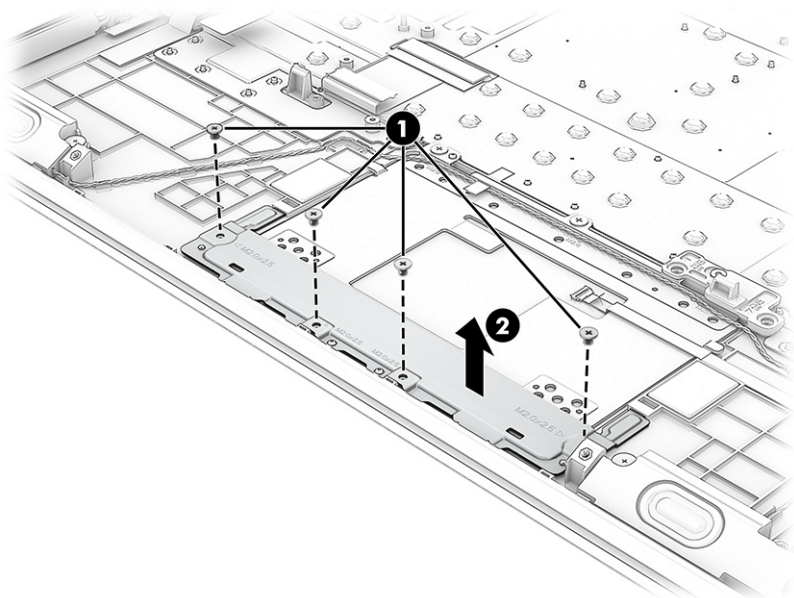

3. Remove the bottom cover bracket by removing two Phillips 2.0 × 2.5 screws **(1)**, and then lifting the bracket **(2)** from the computer.

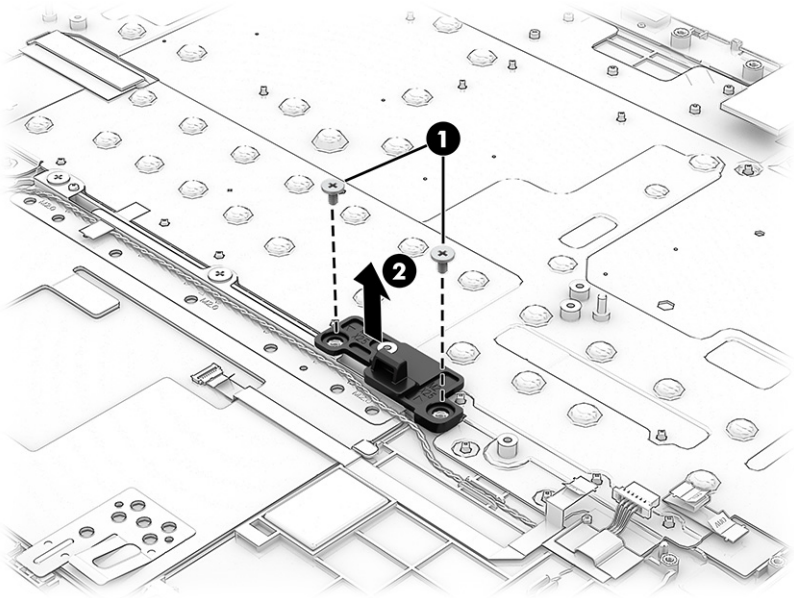

4. Remove the conductive tape **(1)** from the top of the touchpad.
5. Remove the three Phillips M2.0 × 2.0 screws **(2)** from the touchpad.
6. Remove the touchpad and cable **(3)** from the computer.

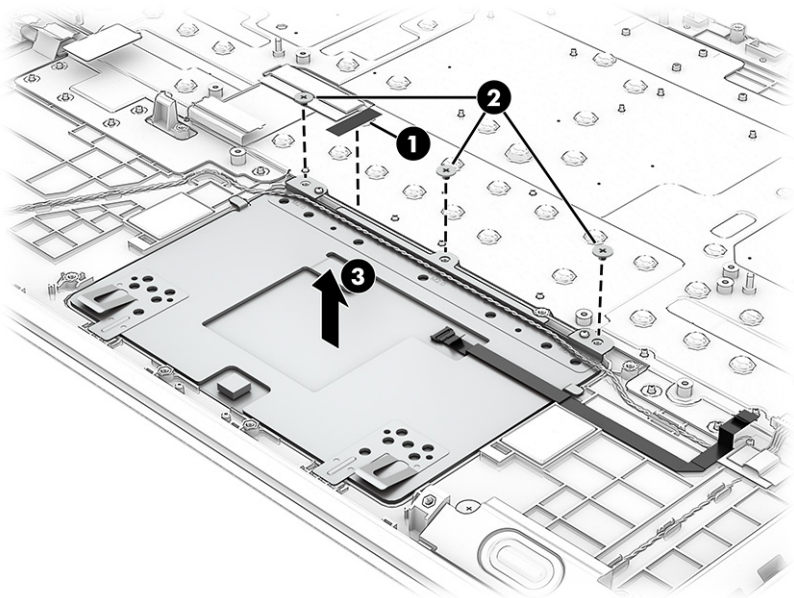

Reverse the removal procedures to install the touchpad.

Display assembly

Use these procedures and illustrations to remove and disassemble the display assembly.

Full hinge-up displays are not available as spare parts. Spare parts for displays are available only at the subcomponent level.

Before removing the display panel, follow these steps:

- Prepare the computer for disassembly (see Preparation for disassembly on page 32).

You can remove the bezel, panel, and camera module with the display assembly connected to the computer.

1. To remove the bezel:
   a. Open the display to its maximum angle.
   b. Using a nonmarking pry tool, release the bezel from the display assembly from the top **(1)**, sides **(2)**, and then bottom **(3)** of the bezel.
   c. Remove the bezel **(4)** from the display assembly.

   NOTE: To avoid damaging the panel, do not use a tool to release the inside of the bezel. You can use a tool only when you insert it from the **outside** of the bezel. Use your fingers to lift up on the bezel. Avoid pressing down on the panel during removal.

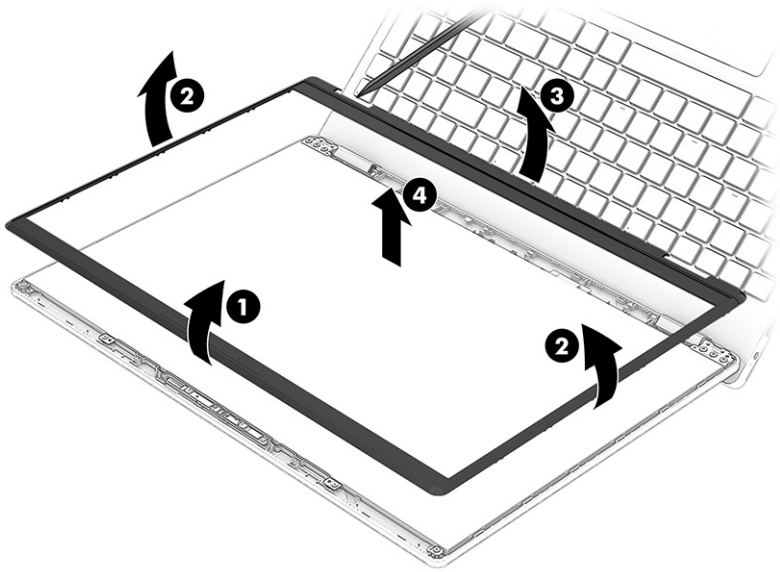

2. To remove the display panel:
   a. The display panel is secured to the display enclosure with tape that is installed under the left and right sides of the panel. To remove the panel, use tweezers **(1)** to grasp the ends of the tape.
   b. Slowly and carefully pull the tape **(2)** out from behind the display panel. You must pull the tape multiple times before it is completely removed.

   IMPORTANT: Pull the tape out slowly and evenly to prevent it from breaking.

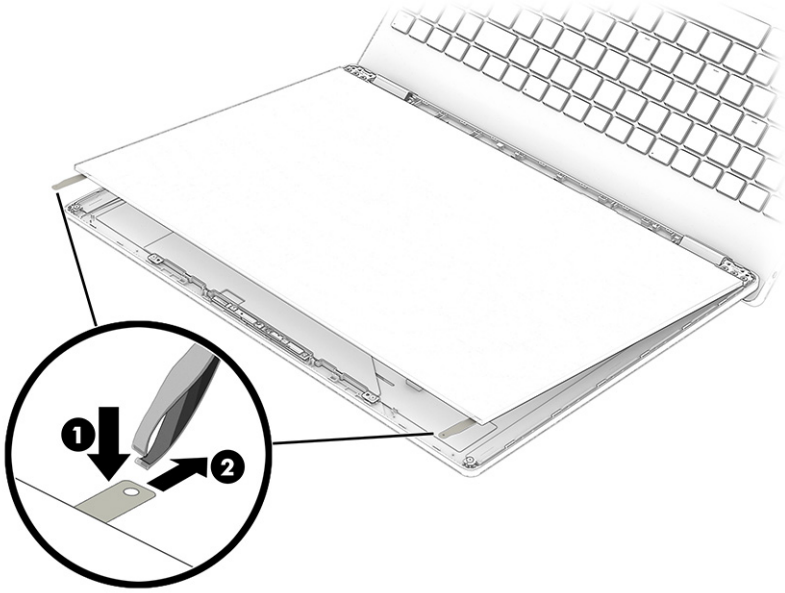

c. Lift the panel up to approximately 90°.

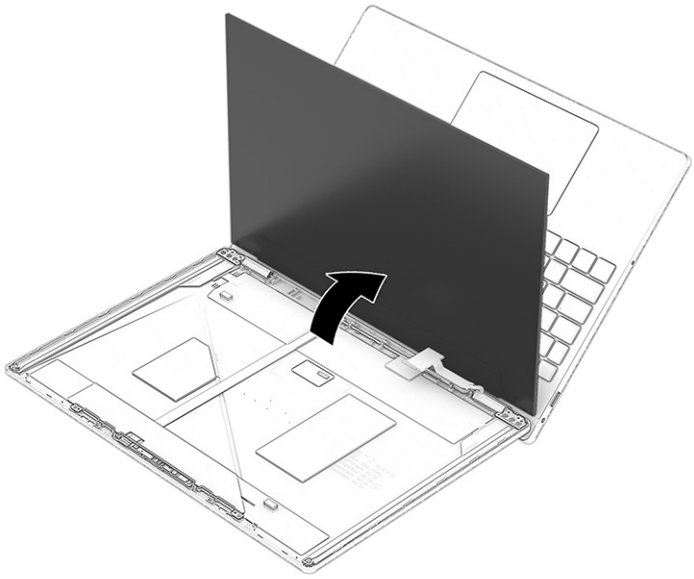

d. Peel the tape **(1)** off the connector on the bottom of the panel.

e. Open the locking bar **(2)**, and then disconnect the cable **(3)** from the panel.

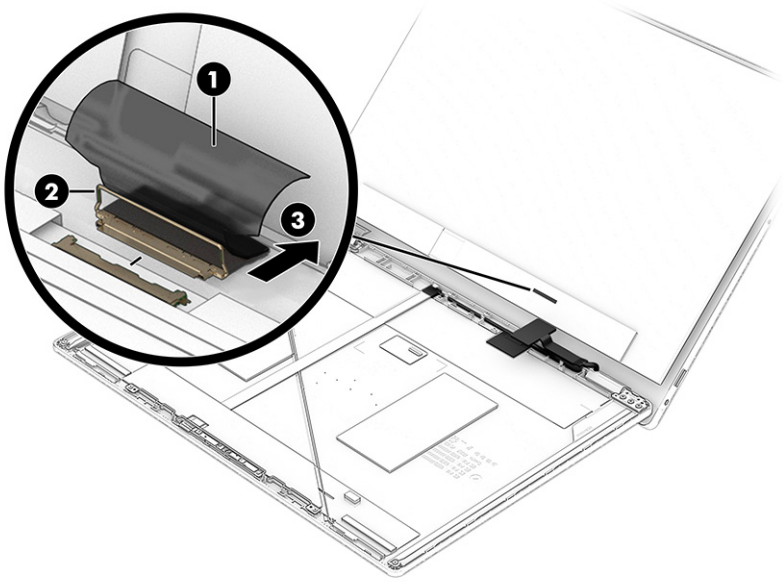

f. When installing a display panel, use the following illustration to determine tape installation locations on the inside of the display rear cover.

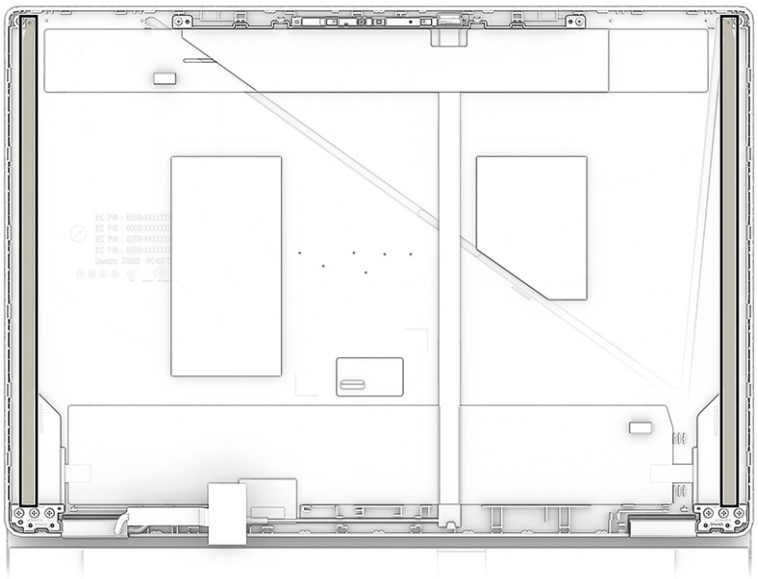

3. To remove the camera module:

a. Remove the panel bracket by removing the two Phillips 2.0 × 2.5 screws **(1)**, and then removing the panel bracket **(2)** from the display rear cover.

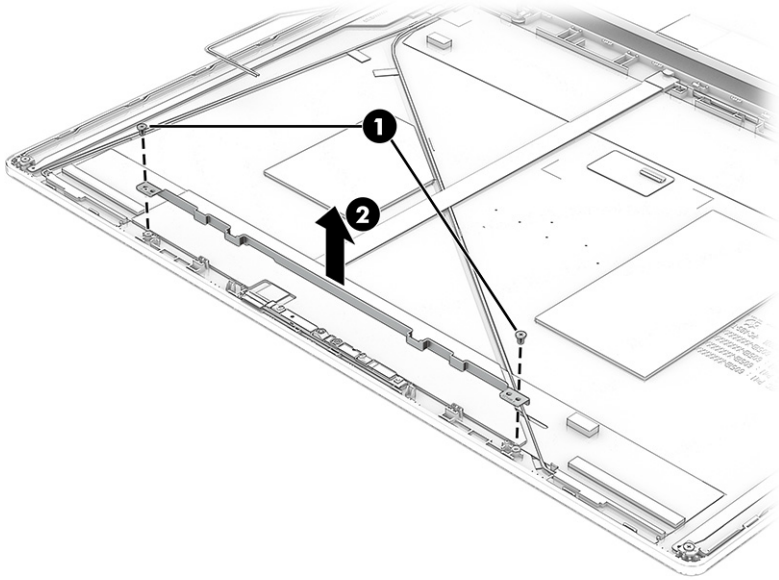

b. Remove the tape **(1)** from the connector on the camera module.

c. Insert a pry tool **(2)** under the end of the camera module, and then pull the tool across the length of the module to release it.

d. Lift the module **(3)** up, and then disconnect the cable from the reverse ZIF connector **(4)** on the camera module.

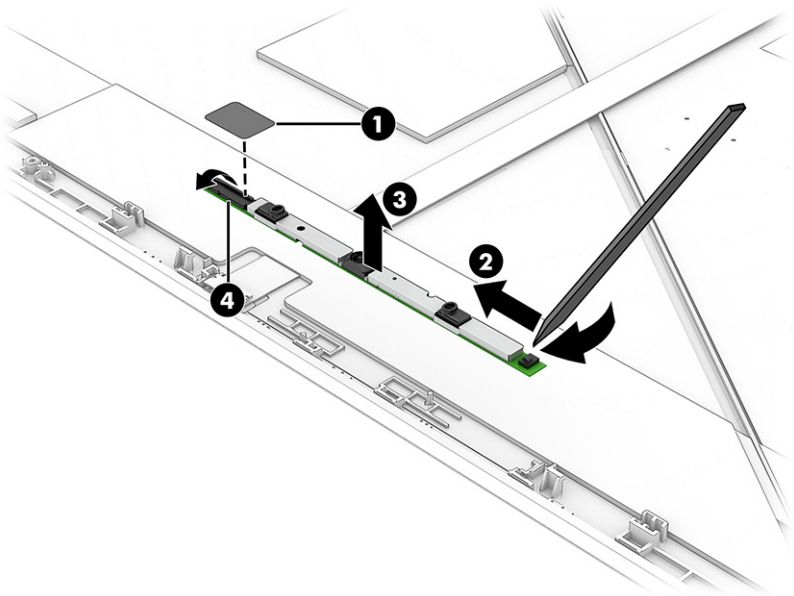

4. The remaining display components require that you remove the display assembly from the computer. To remove the display assembly:

a. Remove the bottom cover (see Bottom cover on page 32).

b. Disconnect the battery cable from the system board (see Removing and reinstalling the same battery on page 36).

c. Remove the system board (see System board on page 55).

d. Remove the three Phillips M2.0 × 3.5 screws **(1)** from each hinge.

e. Remove the two Phillips M2.0 × 2.0 screws **(2)** from each hinge.

f. Lift the brackets **(3)** off the hinges.

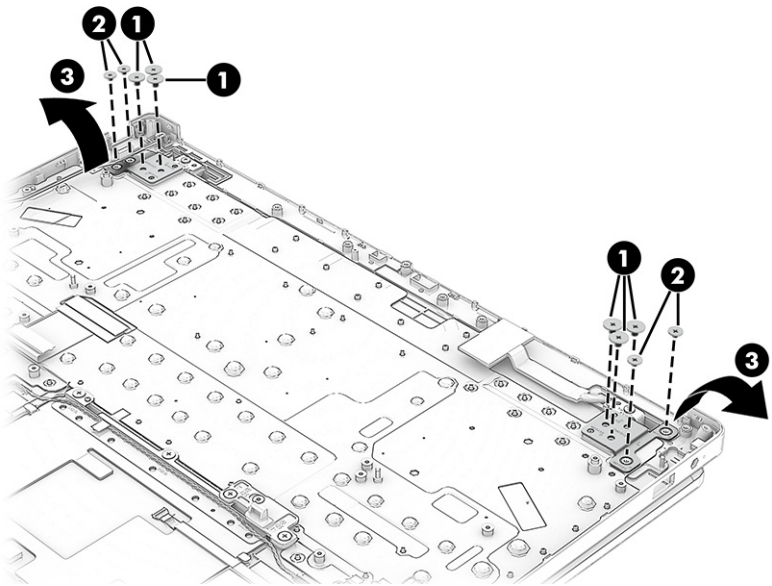

g. Open the computer **(1)** to approximately 90° to open the hinges.

h. Close the computer **(2)** to approximately 20°.

i. Lift computer **(3)** up and off display, pulling the hinges and cables through the holes in the computer.

5. To remove the display/camera cable:

   a. Remove the cable **(1)** from the clips and conductive tape along the bottom left of the display rear cover.

   b. Peel the cable **(2)** off the inside of the display rear cover.

   c. Pull the cable **(3)** out from under the foam piece at the top of the display rear cover.

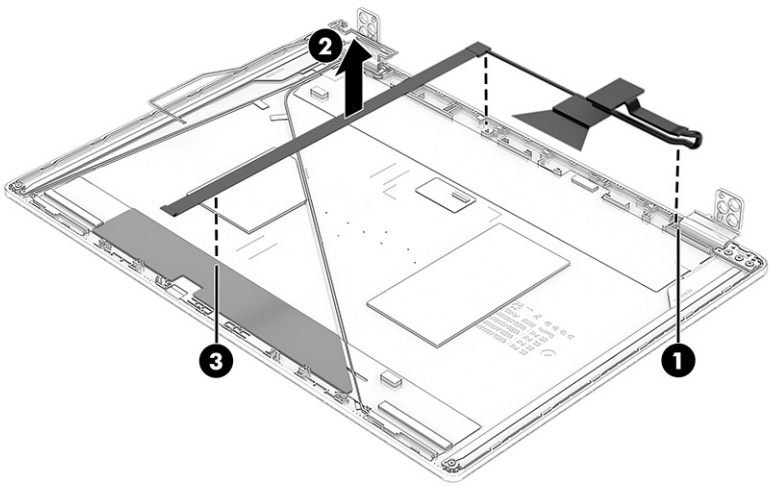

6. Remove the hinges from the display assembly:

   a. Remove the three Phillips M2.0 × 2.0 screws **(1)** from the hinges.

b. Remove the hinges **(2)** from the display.

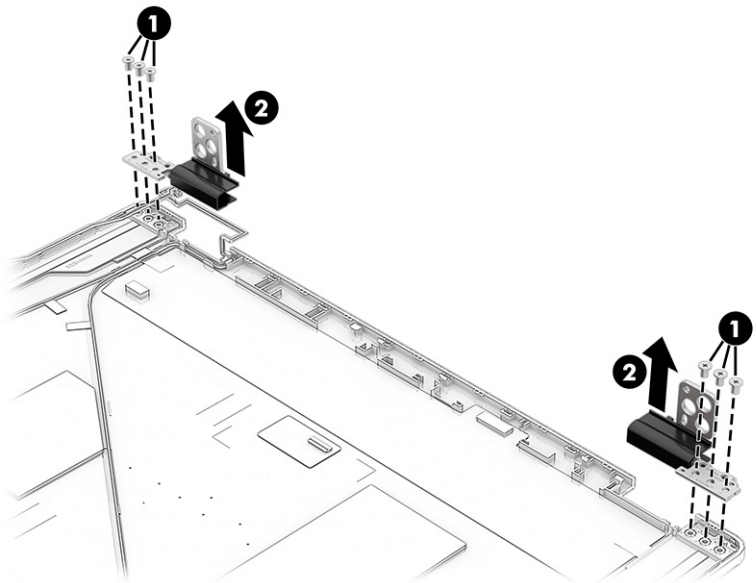

7. Remove the hinge covers from the hinges:

   a. Remove the Phillips M1.6 × 2.0 screw **(1)** from each hinge cover.

   b. Pull the hinge covers **(2)** off the hinges.

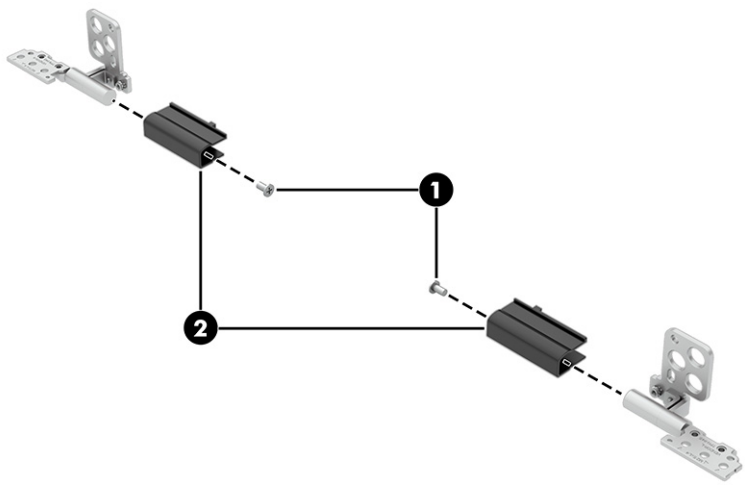

8. To remove the antenna cables:

   a. Remove the cables from the right hinge gap **(1)** at the bottom of the display.

   b. Remove the cables from the clips and tape **(2)** on the inside of the display rear cover.

c. Peel the antennas **(3)** off the inside of the display rear cover.

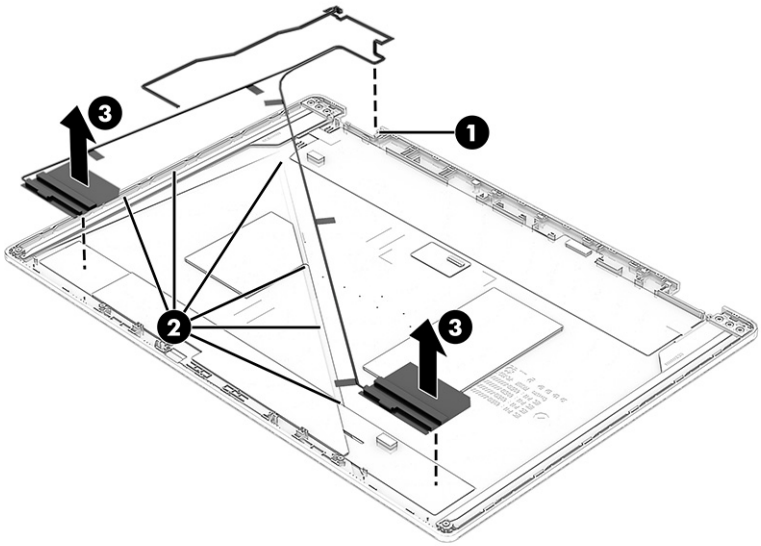

Reverse these procedures to reassemble and replace the display assembly.

Top cover with keyboard

The top cover remains after removing all other spare parts from the computer. The first table includes the top cover spare part numbers. The second table includes keyboard country codes.

Table 6-8 Top cover with keyboard descriptions and part numbers

Description	Spare part number
One-color backlit keyboard	P78977-xx1
Four-color backlit keyboard	P79693-xx1

Table 6-9 Spare part country codes

For use in country or region	Spare part number
Belgium	-A41
Czech Republic/Slovakia	-FL1
Denmark, Finland, and Norway	-DH1
French Canada	-DB1
France	-051
Germany	-041
Greece	-151
Israel	-BB1
Italy	-061
Japan	-291

Table 6-9 Spare part country codes (continued)

For use in country or region	Spare part number
Latin America	-161
The Netherlands	-B31
Russia	-251
Saudi Arabia	-171
Slovenia	-BA1
South Korea	-AD1
Spain	-071
Switzerland	-BG1
Taiwan	-AB1
Thailand	-281
Turkey	-141
Ukraine	-BD1
United Kingdom	-031
United States	-001

7 Using Setup Utility (BIOS)

Setup Utility, or Basic Input/Output System (BIOS), controls communication between all the input and output devices on the system (such as disk drives, display, keyboard, mouse, and printer). Setup Utility (BIOS) includes settings for the types of devices installed, the startup sequence of the computer, and the amount of system and extended memory.

NOTE: To start Setup Utility on convertible computers, your computer must be in notebook mode and you must use the keyboard attached to your notebook.

Starting Setup Utility (BIOS)

You have several ways to access the Setup Utility (BIOS).

IMPORTANT: Use extreme care when making changes in Setup Utility (BIOS). Errors can prevent the computer from operating properly.

Use one of these options:

- Turn on or restart the computer and quickly press f10.
- Turn on or restart the computer, quickly press esc, and then press f10 when the Start menu is displayed.

Updating Setup Utility (BIOS)

Updated versions of Setup Utility (BIOS) might be available on the HP website. Most BIOS updates on the HP website are packaged in compressed files called *SoftPaqs*. Some download packages contain a file named `Readme.txt`, which contains information regarding installing and troubleshooting the file.

Determining the BIOS version

To decide whether you need to update Setup Utility (BIOS), first determine the BIOS version on your computer.

To reveal the BIOS version information (also known as *ROM date* and *System BIOS*), use one of these options.

- HP Support Assistant
  1. Perform one of these tasks:
     - Select the **Search** icon in the taskbar, type `support` in the search box, and then select the **HP Support Assistant** app.
     - Select the question mark icon in the taskbar.
  2. Under **My notebook**, select **Specifications**.
- Setup Utility (BIOS)

1. Start Setup Utility (BIOS) (see Starting Setup Utility (BIOS) on page 69).
2. Select **Main**, and then make note of the BIOS version.
3. Select **Exit**, select one of the options, and then follow the on-screen instructions.

- In Windows, press ctrl+alt+s.

To check for later BIOS versions, see Preparing for a BIOS update on page 70.

Preparing for a BIOS update

Be sure to follow all prerequisites before downloading and installing a BIOS update.

IMPORTANT: To reduce the risk of damage to the computer or an unsuccessful installation, download and install a BIOS update only when the computer is connected to reliable external power using the HP AC adapter provided with the computer (select products only), a replacement AC adapter provided by HP, or an AC adapter with the power rating specified on the product label. Do not download or install a BIOS update while the computer is running on battery power, docked in an optional docking device, or connected to an optional power source. During the download and installation, follow these instructions:

- Do not disconnect power from the computer by unplugging the power cord from the AC outlet.
- Do not shut down the computer or initiate Sleep.
- Do not insert, remove, connect, or disconnect any device, cable, or cord.

NOTE: If your computer is connected to a network, consult the network administrator before installing any software updates, especially system BIOS updates.

Downloading a BIOS update

After you review the prerequisites, you can check for and download BIOS updates.

1. Perform one of these tasks:
   - Select the **Search** icon in the taskbar, type `support` in the search box, and then select the **HP Support Assistant** app.
   - Select the question mark icon in the taskbar.
2. Select **Updates**. The **Checking for Updates** window opens, and Windows checks for updates.
3. Follow the on-screen instructions.
4. At the download area, follow these steps:
   a. Identify the most recent BIOS update and compare it to the BIOS version currently installed on your computer. If the update is more recent than your BIOS version, make a note of the date, name, or other identifier. You might need this information to locate the update later, after it has been downloaded to your hard drive.
   b. Follow the on-screen instructions to download your selection to the hard drive.

      Make a note of the path to the location on your hard drive where the BIOS update is downloaded. You will need to access this path when you are ready to install the update.

Installing a BIOS update

BIOS installation procedures vary. Follow any instructions that appear on the screen after the download is complete. If no instructions appear, follow these steps.

1. Select the **Search** icon in the taskbar, type `file` in the search box, and then select **File Explorer**.
2. Select your hard drive designation. The hard drive designation is typically Local Disk (C:).
3. Using the hard drive path you recorded earlier, open the folder that contains the update.
4. Double-click the file that has an .exe extension (for example, *filename*.exe).

   The BIOS installation begins.
5. Complete the installation by following the on-screen instructions.

NOTE: After a message on the screen reports a successful installation, you can delete the downloaded file from your hard drive.

8 Using HP PC Hardware Diagnostics

You can use the HP PC Hardware Diagnostics utility to determine whether your computer hardware is running properly. The three versions are HP PC Hardware Diagnostics Windows, HP PC Hardware Diagnostics UEFI (Unified Extensible Firmware Interface), and (for select products only) Remote HP PC Hardware Diagnostics UEFI, a firmware feature.

Using HP PC Hardware Diagnostics Windows (select products only)

HP PC Hardware Diagnostics Windows is a Windows-based utility that allows you to run diagnostic tests to determine whether the computer hardware is functioning properly. The tool runs within the Windows operating system to diagnose hardware failures.

If HP PC Hardware Diagnostics Windows is not installed on your computer, you must download and install it. To download HP PC Hardware Diagnostics Windows, see Downloading HP PC Hardware Diagnostics Windows on page 73.

Using an HP PC Hardware Diagnostics Windows hardware failure ID code

When HP PC Hardware Diagnostics Windows detects a failure that requires hardware replacement, a 24-digit failure ID code is generated for select component tests. For interactive tests, such as keyboard, mouse, or audio and video palette, you must perform troubleshooting steps before you can receive a failure ID.

You have several options after you receive a failure ID:

- Select **Next** to open the Event Automation Service (EAS) page, where you can log the case.
- Scan the QR code with your mobile device, which takes you to the EAS page, where you can log the case.
- Select the box next to the 24-digit failure ID to copy your failure code and send it to support.

Accessing HP PC Hardware Diagnostics Windows

After HP PC Hardware Diagnostics Windows is installed, you can access it from HP Support Assistant or the Start menu.

Accessing HP PC Hardware Diagnostics Windows from HP Support Assistant (select products only)

After HP PC Hardware Diagnostics Windows is installed, follow these steps to access it from HP Support Assistant.

1. Complete one of the following tasks:
   - Select the **Search** icon in the taskbar, type `support` in the search box, and then select the **HP Support Assistant** app.
   - Select the question mark icon in the taskbar.

2. Select **Fixes & Diagnostics**.
3. Select **Run hardware diagnostics**, and then select **Launch**.
4. When the tool opens, select the type of diagnostic test that you want to run, and then follow the on-screen instructions.

NOTE: To stop a diagnostic test, select **Cancel**.

Accessing HP PC Hardware Diagnostics Windows from the Start menu (select products only)

After HP PC Hardware Diagnostics Windows is installed, follow these steps to access it from the Start menu.

1. Select the **Start** button, and then select **All apps**.
2. Select **HP PC Hardware Diagnostics Windows**.
3. When the tool opens, select the type of diagnostic test that you want to run, and then follow the on-screen instructions.

NOTE: To stop a diagnostic test, select **Cancel**.

Downloading HP PC Hardware Diagnostics Windows

The HP PC Hardware Diagnostics Windows downloading instructions are provided in English only. You must use a Windows computer to download this tool because only .exe files are provided.

Downloading the latest HP PC Hardware Diagnostics Windows version from HP

To download HP PC Hardware Diagnostics Windows from HP, follow these steps.

1. Go to http://www.hp.com/go/techcenter/pcdiags. The HP PC Diagnostics home page is displayed.
2. Select **Diagnose PC Hardware issues in Windows**, scroll down to the expanded window that appears, and then select **Download**.
3. A pop-up that asks what you want to do with the file opens. Select **Open** or **Save As**. The latest version of the diagnostics tool opens or downloads to the selected location.

Downloading the HP PC Hardware Diagnostics Windows from the Microsoft Store

You can download the HP PC Hardware Diagnostics Windows from the Microsoft Store.

1. Select the Microsoft Store app on your desktop or select the **Search** icon in the taskbar, and then type `Microsoft Store` in the search box.
2. Type `HP PC Hardware Diagnostics Windows` in the **Microsoft Store** search box.
3. Follow the on-screen directions.

The tool downloads to the selected location.

Downloading HP Hardware Diagnostics Windows by product name or number (select products only)

You can download HP PC Hardware Diagnostics Windows by product name or number.

NOTE: For some products, you might have to download the software to a USB flash drive by using the product name or number.

1. Go to http://www.hp.com/support.
2. Select **Software and Drivers**, select your type of product, and then enter the product name or number in the search box that is displayed.
3. In the **Diagnostics** section, select **Download**, and then follow the on-screen instructions to select the specific Windows diagnostics version to be downloaded to your computer or USB flash drive.

The tool downloads to the selected location.

Installing HP PC Hardware Diagnostics Windows

To install HP PC Hardware Diagnostics Windows, navigate to the folder on your computer or the USB flash drive where the .exe file downloaded, double-click the .exe file, and then follow the on-screen instructions.

Using HP PC Hardware Diagnostics UEFI

HP PC Hardware Diagnostics Unified Extensible Firmware Interface (UEFI) allows you to run diagnostic tests to determine whether the computer hardware is functioning properly. The tool runs outside the operating system so that it can isolate hardware failures from issues that are caused by the operating system or other software components.

NOTE: For some products, you must use a Windows computer and a USB flash drive to download and create the HP UEFI support environment because only .exe files are provided. For more information, see Downloading HP PC Hardware Diagnostics UEFI to a USB flash drive on page 75.

If your PC does not start in Windows, you can use HP PC Hardware Diagnostics UEFI to diagnose hardware issues.

Using an HP PC Hardware Diagnostics UEFI hardware failure ID code

When HP PC Hardware Diagnostics UEFI detects a failure that requires hardware replacement, a 24-digit failure ID code is generated.

For assistance in solving the problem, complete one of these tasks:

- Select **Contact HP**, accept the HP privacy disclaimer, and then use a mobile device to scan the failure ID code that appears on the next screen. The HP Customer Support - Service Center page appears with your failure ID and product number automatically filled in. Follow the on-screen instructions.
- Contact support, and provide the failure ID code.

Starting HP PC Hardware Diagnostics UEFI

To start HP PC Hardware Diagnostics UEFI, follow this procedure.

1. Turn on or restart the computer, and quickly press esc.

2. Press f2.

   The BIOS searches three places for the diagnostic tools, in the following order:

   a. Connected USB flash drive

   NOTE: To download the HP PC Hardware Diagnostics UEFI tool to a USB flash drive, see Downloading the latest HP PC Hardware Diagnostics UEFI version on page 76.

   b. Hard drive

   c. BIOS

3. When the diagnostic tool opens, select the type of diagnostic test that you want to run, and then follow the on-screen instructions.

Starting HP PC Hardware Diagnostics UEFI through HP Hotkey Support software (select products only)

This section describes how to start HP PC Hardware Diagnostics UEFI through HP Hotkey Support software.

NOTE: You must disable Fast Boot to access HP PC Hardware Diagnostics UEFI from the HP System Information application.

To disable Fast Boot:

1. Turn on or restart the computer, and when the HP logo appears, press f10 to enter Computer Setup.
2. Select **Advanced**, and then select **Boot Options**.
3. Clear **Fast Boot**.
4. Select **Save Changes and Exit**, and then select **Yes**.

To start HP PC Hardware Diagnostics UEFI through HP Hotkey Support software, follow this procedure:

1. From the **Start** menu, open the HP System Information Application or press fn+esc.
2. In HP System Information screen, select **Run System Diagnostics**, select **Yes** to run the application, and then select **Restart**.

IMPORTANT: To prevent loss of data, save your work in all open apps before restarting your computer.

NOTE: When the restart is complete, the computer opens the HP PC Hardware Diagnostics UEFI Application. Proceed with the troubleshooting tests.

Downloading HP PC Hardware Diagnostics UEFI to a USB flash drive

Downloading HP PC Hardware Diagnostics UEFI to a USB flash drive can be useful in some situations.

- HP PC Hardware Diagnostics UEFI is not included in the preinstallation image.
- HP PC Hardware Diagnostics UEFI is not included in the HP Tool partition.

- The hard drive is damaged.

NOTE: The HP PC Hardware Diagnostics UEFI downloading instructions are provided in English only, and you must use a Windows computer to download and create the HP UEFI support environment because only `.exe` files are provided.

Downloading the latest HP PC Hardware Diagnostics UEFI version

To download the latest HP PC Hardware Diagnostics UEFI version to a USB flash drive, follow these steps.

1. Go to http://www.hp.com/go/techcenter/pcdiags. The HP PC Diagnostics home page is displayed.
2. Select **Diagnose PC Hardware Issues outside of the OS**, scroll down to the expanded window that appears, and then select **Download**.
3. A pop-up that asks what you want to do with the file opens. Select **Open** or **Save As**. The latest version of the diagnostics tool opens or downloads to the selected location.

Downloading HP PC Hardware Diagnostics UEFI by product name or number (select products only)

You can download HP PC Hardware Diagnostics UEFI by product name or number (select products only) to a USB flash drive.

NOTE: For some products, you might have to download the software to a USB flash drive by using the product name or number.

1. Go to http://www.hp.com/support.
2. Enter the product name or number, select your computer, and then select your operating system.
3. In the **Diagnostics** section, follow the on-screen instructions to select and download the specific UEFI Diagnostics version for your computer.

Using Remote HP PC Hardware Diagnostics UEFI settings (select products only)

Remote HP PC Hardware Diagnostics UEFI is a firmware (BIOS) feature that downloads HP PC Hardware Diagnostics UEFI to your computer. It can then run the diagnostics on your computer, and it might upload results to a preconfigured server.

For more information about Remote HP PC Hardware Diagnostics UEFI, go to http://www.hp.com/go/techcenter/pcdiags, select **Diagnose Other Potential Issues**, scroll down to **Remote PC Hardware Diagnostics UEFI**, and then select **Learn More**.

Downloading Remote HP PC Hardware Diagnostics UEFI

Remote HP PC Hardware Diagnostics UEFI is also available as a SoftPaq that you can download to a server.

Downloading the latest Remote HP PC Hardware Diagnostics UEFI version

You can download the latest Remote HP PC Hardware Diagnostics UEFI version to a USB flash drive.

1. Go to http://www.hp.com/go/techcenter/pcdiags. The HP PC Diagnostics home page is displayed.

2. Select **Diagnose PC Hardware Issues outside of the OS**, scroll down to the expanded window that appears, and then select **Download**.

3. A pop-up that asks what you want to do with the file opens. Select **Open** or **Save As**. The latest version of the diagnostics tool opens or downloads to the selected location.

Downloading Remote HP PC Hardware Diagnostics UEFI by product name or number

You can download Remote HP PC Hardware Diagnostics UEFI by product name or number.

NOTE: For some products, you might have to download the software by using the product name or number.

1. Go to http://www.hp.com/support.

2. Select **Software and Drivers**, select your type of product, enter the product name or number in the search box that is displayed, select your computer, and then select your operating system.

3. In the **Diagnostics** section, follow the on-screen instructions to select and download the **Remote UEFI** version for the product.

Customizing Remote HP PC Hardware Diagnostics UEFI settings

Using the Remote HP PC Hardware Diagnostics setting in Computer Setup (BIOS), you can perform several customizations.

- Set a schedule for running diagnostics unattended. You can also start diagnostics immediately in interactive mode by selecting **Execute Remote HP PC Hardware Diagnostics UEFI**.
- Set the location for downloading the diagnostic tools. This feature provides access to the tools from the HP website or from a server that has been preconfigured for use. Your computer does not require the traditional local storage, such as a hard drive or USB flash drive, to run remote diagnostics.
- Set a location for storing the test results. You can also set the user name and password that you use for uploads.
- Display status information about the diagnostics run previously.

To customize Remote HP PC Hardware Diagnostics UEFI settings, follow these steps:

1. Turn on or restart the computer, and when the HP logo appears, press f10 to enter Computer Setup.

2. Select **Advanced**, and then select **Settings**.

3. Make your customization selections.

4. Select **Main**, then select **Save Changes and Exit** to save your settings.

Your changes take effect when the computer restarts.

9 Backing up, restoring, and recovering

You can use Windows tools or HP software to back up your information, create a restore point, reset your computer, create recovery media, or restore your computer to its factory state. Performing these standard procedures can return your computer to a working state faster.

IMPORTANT: If you are performing recovery procedures on a tablet, the tablet battery must be at least 70% charged before you start the recovery process.

IMPORTANT: For a tablet with a detachable keyboard, connect the tablet to the keyboard base before beginning any recovery process.

Backing up information and creating recovery media

These methods of creating recovery media and backups are available on select products only.

Using Windows tools for backing up

HP recommends that you back up your information immediately after initial setup. You can do this task either using Windows Backup locally with an external USB flash drive or using online tools.

NOTE: If computer storage is 32 GB or less, Microsoft System Restore is disabled by default.

Using the HP Cloud Recovery Download Tool to create a recovery USB flash drive (select products only)

You can use the HP Cloud Recovery Download Tool to create an HP Recovery bootable USB flash drive.

For details:

- Go to http://www.hp.com, search for HP Cloud Recovery, and then select the result that matches the type of computer that you have and follow the on-screen instructions.

NOTE: In select countries, if you cannot create the HP Recovery USB flash drive yourself, contact support. Go to http://www.hp.com/support, select your country or region, and then follow the on-screen instructions.

IMPORTANT: HP recommends that you follow the Restoring and recovery methods on page 79 to restore your computer before you obtain and use the HP USB flash drive. Using a recent backup can return your machine to a working state sooner than using the HP USB flash drive. After the system is restored, reinstalling all the operating system software released since your initial purchase can be a lengthy process.

Restoring and recovering your system

You have several tools available to recover your system both within and outside of Windows if the desktop cannot load.

HP recommends that you attempt to restore your system using the Restoring and recovery methods on page 79.

Creating a system restore

System Restore is available in Windows. The System Restore software can automatically or manually create restore points, or snapshots, of the system files and settings on the computer at a particular point.

When you use System Restore, it returns your computer to its state at the time you made the restore point. Your personal files and documents should not be affected.

Restoring and recovery methods

After you run the first method, test to see whether the issue still exists before you proceed to the next method, which might now be unnecessary.

1. Run a Microsoft System Restore.
2. Run Reset this PC.

   NOTE: The options **Remove everything** and then **Fully clean the drive** can take several hours to complete and leave no information on your computer. It is the safest way to reset your computer before you recycle it.

3. Recover using the HP Recovery USB flash drive. For more information, see Recovering using the HP Recovery USB flash drive on page 79.

For more information about the first two methods, see the Get Help app:

- Select the **Start** button, select **All apps**, select the **Get Help** app, and then enter the task you want to perform.

NOTE: You must be connected to the internet to access the Get Help app.

Recovering using the HP Recovery USB flash drive

You can use the HP Recovery USB flash drive to recover the operating system and drivers that were installed at the factory. On select products, you can create recovery media on a bootable USB flash drive using the HP Cloud Recovery Download Tool.

For details, see Using the HP Cloud Recovery Download Tool to create a recovery USB flash drive (select products only) on page 78.

NOTE: In select countries, if you cannot create the HP Recovery USB flash drive yourself, contact support. Go to http://www.hp.com/support, select your country or region, and then follow the on-screen instructions.

To recover your system:

- Insert the HP Recovery USB flash drive, and then restart the computer.

NOTE: HP recommends that you follow the Restoring and recovery methods on page 79 to restore your computer before you obtain and use the HP USB flash drive. Using a recent backup can return your machine to a working state sooner than using the HP USB flash drive. After the system is restored, reinstalling all the operating system software released since your initial purchase can be a lengthy process.

Changing the computer boot order

If your computer does not restart using the HP Recovery USB flash drive, you can change the computer boot order, which is the order of devices listed in BIOS for startup information.

IMPORTANT: For a tablet with a detachable keyboard, connect the tablet to the keyboard base before beginning these steps.

To change the boot order:

1. Insert the HP Recovery USB flash drive.
2. Access the system **Startup** menu.
   - For computers or tablets with keyboards attached, turn on or restart the computer or tablet, quickly press esc, and then press f9 for boot options.
   - For tablets without keyboards, turn on or restart the tablet, and then quickly press and hold one of the following buttons:
     - Volume up
     - Volume down

     Then select **f9**.
3. Select the USB flash drive to boot from, and then follow the on-screen instructions.

Using HP Sure Recover (select products only)

Select computer models are configured with HP Sure Recover, a PC operating system (OS) recovery solution built into the hardware and software. HP Sure Recover can fully restore the HP OS image without installed recovery software.

Using HP Sure Recover, an administrator or user can restore the system and install:

- Latest version of the OS
- Platform-specific device drivers
- Software applications, in the case of a custom image

To access the latest documentation for HP Sure Recover, go to http://www.hp.com/support. Follow the on-screen instructions to find your product and locate your documentation.

10 Specifications

This chapter provides specifications for your computer system.

Computer specifications

This section provides specifications for your computer. When you travel with your computer, the computer dimensions and weights, as well as input power ratings and operating specifications, provide helpful information.

Table 10-1 Computer specifications

	Metric	U.S.
Dimensions		
Width	**343.0 mm**	13.50 in
Depth	**253.0 mm**	9.96 in
Height (front)	**22.5 mm**	0.89 in
Height (rear)	**23.67 mm**	0.93 in
Height (max)	**25.7 mm**	1.01 in
Weight	**2420.5 g**	5.33 lbs
Input power		
Operating voltage and current	5 V DC @ 3 A / 9 V DC @ 3 A / 12 V DC @ 5 A / 15 V DC @ 5 A / 20 V DC @ 5 A - 100 W USB-C 19.5 V DC @ 6.15 A - 120 W 19.5 V DC @ 7.70 A - 150 W 19.5 V DC @ 10.3 A - 200 W 19.5 V DC @ 11.8 A - 230 W 20 V DC @ 14 A - 280 W	
Temperature		
Operating	**5°C to 35°C**	41°F to 95°F
Nonoperating	**-20°C to 60°C**	-4°F to 140°F
Relative humidity (noncondensing)		
Operating	10% to 90%	
Nonoperating	5% to 95%	
Maximum altitude (unpressurized)		
Operating	**-15 m to 3,048 m**	-50 ft to 10,000 ft

Table 10-1 Computer specifications (continued)

	Metric	U.S.
Nonoperating	**-15 m to 12,192 m**	-50 ft to 40,000 ft

NOTE: Applicable product safety standards specify thermal limits for plastic surfaces. The device operates well within this range of temperatures.

Display specifications

This section provides specifications for your display.

Table 10-2 Display specifications

	Metric	U.S.
Active diagonal size	**38.86 cm**	15.3 in
Resolution	2560 × 1600 (WQXGA) 1920 × 1200 (WUXGA)	
Surface treatment	Antiglare	
Brightness	500 nits (WQXGA) 300 nits (WUXGA)	
Viewing angle	UWVA	
Backlight	LED	
Display panel interface	eDP	

Solid-state drive specifications

This section provides specifications for your SSDs.

Table 10-3 SSD specifications

	512 GB*	1 TB*
Dimensions		
Height	1.0 mm	1.0 mm
Length	50.8 mm	50.8 mm
Width	28.9 mm	28.9 mm
Weight	< 10 g	< 10 g
Interface type	PCIe	PCIe
Ready time, maximum (to not busy)	< 1.0 ms	< 1.0 ms
Access times, logical	0.1 ms	0.1 ms
Transfer rate		
Sequential read	up to 2150 MBps	up to 2150 MBps

Table 10-3 SSD specifications (continued)

	512 GB*	1 TB*
Random read	Up to 300,000 IOPs	Up to 300,000 IOPs
Sequential write	up to 1550 MBps	up to 1550 MBps
Random write	Up to 100,000 IOPs	Up to 100,000 IOPs
Total logical sectors	1,000,215,216	1,500,336,388
Operating temperature	**0°C to 70°C** (32°F to 158°F)	**0°C to 70°C** (32°F to 158°F)

*Actual accessible capacity is less. Actual drive specifications might differ slightly.

NOTE: Certain restrictions and exclusions apply. Contact support for details.

11 Power cord set requirements

This chapter provides power cord requirements for countries and regions.

The wide-range input feature of the computer permits it to operate from any line voltage from 100 V AC to 120 V AC, or from 220 V AC to 240 V AC.

The 3-conductor power cord set included with the computer meets the requirements for use in the country or region where the equipment is purchased.

Power cord sets for use in other countries or regions must meet the requirements of the country and region where the computer is used.

Requirements for all countries

These power cord requirements are applicable to all countries and regions.

- The length of the power cord set must be at least **1.0 m** (3.3 ft) and no more than **2.0 m** (6.5 ft).
- All power cord sets must be approved by an acceptable accredited agency responsible for evaluation in the country or region where the power cord set will be used.
- The power cord sets must have a minimum current capacity of 10 A and a nominal voltage rating of 125 V AC or 250 V AC, as required by the power system of each country or region.
- The appliance coupler must meet the mechanical configuration of an EN 60 320/IEC 320 Standard Sheet C13 connector for mating with the appliance inlet on the back of the computer.

Requirements for specific countries and regions

To determine power cord requirements for specific countries and regions, use this table.

Table 11-1 Power cord requirements for specific countries and regions

Country/region	Accredited agency	Applicable note number
Argentina	IRAM	1
Australia	SAA	1
Austria	OVE	1
Belgium	CEBEC	1
Brazil	ABNT	1
Canada	CSA	2
Chile	IMQ	1
Denmark	DEMKO	1
Finland	FIMKO	1
France	UTE	1
Germany	VDE	1

Table 11-1 Power cord requirements for specific countries and regions (continued)

Country/region	Accredited agency	Applicable note number
India	BIS	1
Israel	SII	1
Italy	IMQ	1
Japan	JIS	3
Netherlands	KEMA	1
New Zealand	SANZ	1
Norway	NEMKO	1
The People's Republic of China	CCC	4
Saudi Arabia	SASO	7
Singapore	PSB	1
South Africa	SABS	1
South Korea	KTL	5
Sweden	SEMKO	1
Switzerland	SEV	1
Taiwan	BSMI	6
Thailand	TISI	1
United Kingdom	ASTA	1
United States	UL	2

1. The flexible cord must be Type HO5VV-F, 3-conductor, 0.75 mm^2 conductor size. Power cord set fittings (appliance coupler and wall plug) must bear the certification mark of the agency responsible for evaluation in the country or region where it will be used.
2. The flexible cord must be Type SVT/SJT or equivalent, No. 18 AWG, 3-conductor. The wall plug must be a 2-pole grounding type with a NEMA 5-15P (15 A, 125 V AC) or NEMA 6-15P (15 A, 250 V AC) configuration. CSA or C-UL mark. UL file number must be on each element.
3. The appliance coupler, flexible cord, and wall plug must bear a T mark and registration number in accordance with the Japanese Dentori Law. The flexible cord must be Type VCTF, 3-conductor, 0.75 mm^2 or 1.25 mm^2 conductor size. The wall plug must be a 2-pole grounding type with a Japanese Industrial Standard C8303 (7 A, 125 V AC) configuration.
4. The flexible cord must be Type RVV, 3-conductor, 0.75 mm^2 conductor size. Power cord set fittings (appliance coupler and wall plug) must bear the CCC certification mark.
5. The flexible cord must be Type H05VV-F 3-conductor, 0.75 mm^2 conductor size. KTL logo and individual approval number must be on each element. Approval number and logo must be printed on a flag label.
6. The flexible cord must be Type HVCTF 3-conductor, 1.25 mm^2 conductor size. Power cord set fittings (appliance coupler, cable, and wall plug) must bear the BSMI certification mark.

7. For 127 V AC, the flexible cord must be Type SVT or SJT 3-conductor, 18 AWG, with plug NEMA 5-15P (15 A, 125 V AC), with UL and CSA or C-UL marks. For 240 V AC, the flexible cord must be Type H05VV-F 3-conductor, 0.75 mm^2 or 1.00 mm^2 conductor size, with plug BS 1363/A with BSI or ASTA marks.

12 Swelling or deformation of notebook battery

To protect your hardware from potential damage, HP recommends that if you are experiencing battery swelling, stop using the notebook until you can replace the battery.

You can contact HP to understand what battery replacement options are available. To learn more about lithium-ion batteries and the factors that can accelerate battery swelling, see https://support.hp.com/us-en/document/ish_6824662-6824706-16.

Swollen notebook batteries

You might notice that your notebook battery has become somewhat deformed or swollen over time. In some cases, the battery swelling might be significant enough to impact other components of the system including the touchpad, keyboard, and chassis.

Swollen battery is not a safety issue

A swollen battery does not present a safety issue. It is the result of the generation of gases per the normal degradation of the battery cell over time.

HP has worked closely with our battery cell suppliers and third-party industry experts to help minimize the potential for HP batteries to swell over time and to identify that swollen batteries are not a safety issue.

Discontinue using a swollen battery

To protect your hardware from potential damage, HP recommends that, if you are experiencing battery swelling, you stop using the notebook until the battery can be replaced.

You can contact https://www.hp.com/go/contacthp to understand what battery replacement options are available.

Replace a swollen battery

If a battery is under warranty, HP will replace the battery per the terms and conditions of the HP Worldwide Limited Warranty or applicable HP Care Packs.

For batteries no longer under warranty, contact HP to purchase a genuine HP replacement battery.

Minimize battery swelling

Multiple factors can accelerate battery swelling.

To help mitigate battery swelling over time, you can use either HP Adaptive Battery Optimizer (consumer notebooks) or HP Battery Health Manager (commercial notebooks) settings to improve battery longevity and performance for various use scenarios.

Adaptive Battery Optimizer (consumer notebooks)

Adaptive Battery Optimizer technology can help mitigate the factors that cause the battery to swell. It is available on select HP OMEN, HP Spectre, HP Pavilion, and HP ENVY notebook computers.

Adaptive Battery Optimizer has been available on select gaming notebooks since 2019 and select consumer notebooks since 2020. To learn more about enabling Adaptive Battery Optimizer on your HP notebook, see https://support.hp.com/us-en/document/ish_9908083-9908127-16.

HP Battery Health Manager (commercial notebooks)

HP Battery Health Manager provides an easy-to-manage solution to help mitigate factors that cause the battery to swell. It is available on select HP ProBook and HP EliteBook notebook computers.

HP Battery Health Manager is available on select commercial notebooks manufactured since 2016. To learn more about HP Battery Health Manager, see https://support.hp.com/us-en/document/ish_4449597-3519507-16.

13 Recycling

When a nonrechargeable or rechargeable battery has reached the end of its useful life, do not dispose of the battery in general household waste. Follow the local laws and regulations in your area for battery disposal.

HP encourages customers to recycle used electronic hardware, HP original print cartridges, and rechargeable batteries. For more information about recycling programs, see the HP website at http://www.hp.com/recycle.

Index

A

AC adapters, spare part numbers 22
action key, identifying 14
audio board
  removal 49
  spare part number 49
audio-out (headphone)/audio-in (microphone) combo jack, identifying 7
audio, product description 3

B

backup, creating 78
backups 78
battery
  illustrated 19
  spare part number 19
battery swelling 87
BIOS
  determining version 69
  downloading an update 70, 71
  starting the Setup Utility 69
  updating 69
Bluetooth label 16
boot order, changing 80
bottom components 15
bottom cover
  illustrated 20
  removal 32
  spare part number 20, 32
buttons
  left touchpad 10, 11
  power 13, 15
  right touchpad 10, 11

C

camera
  identifying 9
  illustrated 21
  spare part number 21
camera light, identifying 8, 9
caps lock light 12
caring for your computer 28
cautions
  electrostatic discharge 24, 25
cleaning your computer 28
  caring for wood veneer 30
  disinfecting 29
  HP Easy Clean 28
  removing dirt and debris 28
components
  bottom 15
  display 7, 8
  keyboard area 10
  left side 6
  lights 11
  rear 16
  right side 6
  touchpad 10
computer major components 18
computer specifications 81
connectors
  power 7
control zone 10

D

display
  specifications 81, 82
display assembly
  subcomponents 20
display back cover
  illustrated 22
  spare part number 22
display cable
  illustrated 22
  spare part number 22
display components 7, 8
display panel
  illustrated 21
  product description 1
  spare part number 21

E

electrostatic discharge (ESD) 24, 25
  preventing damage 24-26
esc key, identifying 14

F

fan
  illustrated 20
  removal 54
  spare part number 20, 54
flicker-free display technology 7
fn key, identifying 14

G

graphics, product description 1
grounding methods 24-26
guidelines
  packaging 24, 30
  transporting 24, 30
  workstation 24

H

hard drive
  product description 2
  specifications 81
HDMI port, identifying 16
heat sink
  illustrated 20, 52
  removal 52
  spare part number 20, 52
  spare part numbers 52
hinge
  illustrated 21
  spare part number 21
HP PC Hardware Diagnostics UEFI
  downloading 75
  failure ID code 74
  HP Hotkey Support software 75
  starting 74, 75
  using 74
HP PC Hardware Diagnostics Windows
  accessing 72, 73
  downloading 73
  failure ID code 72
  installing 74
  using 72
HP Recovery media recovery 79
HP Sure Recover 80

I

illustrated parts catalog 18
integrated numeric keypad, identifying 15

internal microphones, identifying 8, 9
IR camera identifying 8

J

jacks
audio-out (headphone)/audio-in (microphone) 7
network 6
RJ-45 (network) 6

K

keyboard
product description 3
keyboard country codes 67
keypad, integrated numeric 15
keys
action 14
esc 14
fn 14
num lock 14
Windows 14

L

labels
Bluetooth 16
regulatory 16
serial number 16
service 16
wireless certification 16
WLAN 16
left control zone, identifying 10
left side components 6
lights
camera 8, 9
caps lock 12
mute 12
power 7, 12
RJ-45 (network) status 6
touchpad 10, 12
low blue light mode 7

M

memory module
product description 2
memory modules
removal 43
spare part numbers 43
microphone
product description 3
mute light, identifying 12

N

network jack, identifying 6
num lock key, identifying 14

O

operating system, product description 4

P

packaging guidelines 24, 30
pointing device, product description 3
ports
HDMI 16
product description 3
USB port 6, 7
USB Type-C port 16
power button, identifying 13
power connector
identifying 7
power cord
requirements for all countries 84
requirements for specific countries and regions 84
set requirements 84
power cords, spare part numbers 22
power key, identifying 15
power light, identifying 7, 12
power requirements, product description 4
primary storage
product description 2
processor
product description 1
product description
audio 3
display panel 1
graphics 1
hard drive 2
keyboard 3
memory module 2
microphone 3
operating system 4
pointing device 3
ports 3
power requirements 4
primary storage 2
processors 1
security 4
serviceability 5
solid-state drive 2
video 3
wireless 3
product name and number, computer 16

R

recovery 78
discs 79
media 79
USB flash drive 79
recovery media 78
creating using HP Cloud Recovery Download Tool 78
creating using Windows tools 78
regulatory information
regulatory label 16
wireless certification labels 16
Remote HP PC Hardware Diagnostics UEFI settings
customizing 77
using 76
removal and replacement
procedures 32, 48
solid-state drive 44
restoring 78
restoring and recovery methods 79
right control zone, identifying 10
right side components 6
RJ-45 (network) jack, identifying 6
RJ-45 (network) status lights, identifying 6
RJ-45 (network), identifying 6

S

Screw Kit, spare part number 22
security, product description 4
serial number, computer 16
service labels, locating 16
serviceability, product description 5
solid-state drive
illustrated 19
product description 2
removal and replacement 44
spare part number 19
specifications 82
speaker
illustrated 20
removal 50
spare part number 20
spare part numbers 50

speakers, identifying 16
special keys
identifying 13
using 13
specifications
computer 81
display 81, 82
hard drive 81
solid-state drive 82
static electricity 24, 25
support information 30
swelling or deformation of
notebook battery 87
system board
illustrated 19
removal 55
spare part number 19
spare part numbers 55
system restore 79
system restore point, creating 78
Windows
backup 78
recovery media 78
system restore point 78
Windows key, identifying 14
Windows tools, using 78
wireless antennas
illustrated 21
spare part number 21
wireless antennas, identifying 8, 9
wireless certification label 16
wireless, product description 3
WLAN antennas, identifying 8, 9
WLAN device 16
WLAN label 16
WLAN module
illustrated 19
removal 48
spare part number 19, 48
workstation guidelines 24

T

top cover with keyboard
illustrated 19
spare part number 19
spare part numbers 67
touchpad
illustrated 19
removal 57
settings 10
spare part number 19
spare part numbers 57
touchpad buttons
identifying 10, 11
touchpad components 10
touchpad light, identifying 10, 12
touchpad settings, adjusting 10
touchpad zone, identifying 10, 11
transporting guidelines 24, 30
traveling with the computer 16

U

USB port, identifying 6, 7
USB Type-C port, identifying 16

V

vent, identifying 16
vents, identifying 16
video, product description 3

W

wake-on-voice 8