Maintenance and Service Guide

HP 17 Laptop AI PC
Model numbers: 17-cn5xxx

SUMMARY

This guide provides maintenance information about such topics as spare parts, removal and replacement of parts, security, and backing up.

Legal information

© Copyright 2025 HP Development Company, L.P.

AMD is a trademark of Advanced Micro Devices, Inc. Bluetooth is a trademark owned by its proprietor and used by HP Inc. under license. Intel and Core are trademarks of Intel Corporation or its subsidiaries in the U.S. and/or other countries. Microsoft and Windows are either registered trademarks or trademarks of Microsoft Corporation in the United States and/or other countries. USB Type-C, USB-C, and the USB 5 Gbps and 10 Gbps Port Logos are trademarks or registered trademarks of the USB Implementers Forum, Inc. DisplayPort and the DisplayPort logo are trademarks owned by the Video Electronics Standards Association (VESA) in the United States and other countries. Miracast and Wi-Fi are registered trademarks of Wi-Fi Alliance.

The information contained herein is subject to change without notice. The only warranties for HP products and services are set forth in the express warranty statements accompanying such products and services. Nothing herein should be construed as constituting an additional warranty. HP shall not be liable for technical or editorial errors or omissions contained herein.

First Edition: March 2025

Document Part Number: P28903-001

Product notice

This guide describes features that are common to most models. Some features may not be available on your computer.

Not all features are available in all editions or versions of Windows. Systems may require upgraded and/or separately purchased hardware, drivers, software or BIOS update to take full advantage of Windows functionality. Windows 10 is automatically updated, which is always enabled. ISP fees may apply and additional requirements may apply over time for updates. Go to http://www.microsoft.com for details.

To access the latest user guides, go to http://www.hp.com/support, and follow the instructions to find your product. Then select **Manuals**.

Software terms

By installing, copying, downloading, or otherwise using any software product preinstalled on this computer, you agree to be bound by the terms of the HP End User License Agreement (EULA). If you do not accept these license terms, your sole remedy is to return the entire unused product (hardware and software) within 14 days for a full refund subject to the refund policy of your seller.

For any further information or to request a full refund of the price of the computer, please contact your seller.

Safety warning notice

Reduce the possibility of heat-related injuries or of overheating the computer by following the practices described.

⚠ **WARNING!** To reduce the possibility of heat-related injuries or of overheating the computer, do not place the computer directly on your lap or obstruct the computer air vents. Use the computer only on a hard, flat surface. Do not allow another hard surface, such as an adjoining optional printer, or a soft surface, such as pillows or rugs or clothing, to block airflow. Also, do not allow the AC adapter to come into contact with the skin or a soft surface, such as pillows or rugs or clothing, during operation. The computer and the AC adapter provided by HP comply with the user-accessible surface temperature limits defined by applicable safety standards.

Important notice about Customer Self-Repair parts

Your computer includes Customer Self-Repair parts and parts that should be accessed only by an authorized service provider.

IMPORTANT: See Removal and replacement procedures for Customer Self-Repair parts on page 33 for details.

Accessing parts described in Removal and replacement procedures for authorized service provider parts on page 40 can damage the computer or void your warranty.

Table of contents

1 Product description 1

2 Getting to know your computer 6

Right side 6

Left side 7

Display 8

Low blue light mode (select products only) 8

Keyboard area 10

Touchpad settings and components 10

Touchpad settings 10

Adjusting touchpad settings 10

Turning on the touchpad 10

Touchpad components 10

Lights 11

Button, speakers, and fingerprint reader 12

Special keys 14

Bottom 16

Labels 16

3 Illustrated parts catalog 18

Computer major components 18

Display assembly subcomponents 20

Miscellaneous parts 22

4 Removal and replacement procedures preliminary requirements 24

Tools required 24

Service considerations 24

Plastic parts 24

Cables and connectors 24

Drive handling 24

Electrostatic discharge information 25

Generating static electricity 25

Preventing electrostatic damage to equipment 26

Personal grounding methods and equipment 26

Grounding the work area 27

Recommended materials and equipment 27

Cleaning your computer 28

Enabling HP Easy Clean (select products only) 28

Removing dirt and debris from your computer 28

Cleaning your computer with a disinfectant 29

Caring for wood veneer (select products only) 30

Packaging and transporting guidelines 30
Accessing support information 30

5 Removal and replacement procedures for Customer Self-Repair parts 33

Component replacement procedures 33
Preparation for disassembly 33
Battery 33
Removing and reinstalling the same battery 34
Installing a new battery 35

6 Removal and replacement procedures for authorized service provider parts 40

Component replacement procedures 40
Preparation for disassembly 40
Bottom cover and rubber feet 40
Memory modules 44
Solid-state drive 45
WLAN module 46
Fingerprint reader 48
USB board 49
Touchpad 50
Fan 51
Heat sink 53
System board 54
Speakers 56
Display assembly 57
Power connector cable 63
Top cover with keyboard 64

7 Computer Setup (BIOS), TPM, and HP Sure Start 66

Using Computer Setup 66
Navigating and selecting in Computer Setup 66
Restoring factory settings in Computer Setup 66
Updating the BIOS 67
Determining the BIOS version 67
Preparing for a BIOS update 67
Downloading a BIOS update 68
Installing a BIOS update 68
Changing the boot order using the f9 prompt 69

TPM BIOS settings (select products only) 69

Using HP Sure Start (select products only) 69

8 Backing up, restoring, and recovering 70

Backing up information and creating recovery media 70
Using Windows tools for backing up 70
Using the HP Cloud Recovery Download Tool to create a recovery USB flash drive (select products only) 70

Restoring and recovering your system 70
Creating a system restore 71

Restoring and recovery methods 71
Recovering using the HP Recovery USB flash drive 71
Changing the computer boot order 72
Using HP Sure Recover (select products only) 72

9 Using HP PC Hardware Diagnostics 73

Using HP PC Hardware Diagnostics Windows (select products only) 73
Using an HP PC Hardware Diagnostics Windows hardware failure ID code 73
Accessing HP PC Hardware Diagnostics Windows 73
Accessing HP PC Hardware Diagnostics Windows from HP Support Assistant 73
Accessing HP PC Hardware Diagnostics Windows from the Start menu (select products only) 74
Downloading HP PC Hardware Diagnostics Windows 74
Downloading the latest HP PC Hardware Diagnostics Windows version from HP 74
Downloading the HP PC Hardware Diagnostics Windows from the Microsoft Store 74
Downloading HP Hardware Diagnostics Windows by product name or number (select products only) 75
Installing HP PC Hardware Diagnostics Windows 75

Using HP PC Hardware Diagnostics UEFI 75
Using an HP PC Hardware Diagnostics UEFI hardware failure ID code 75
Starting HP PC Hardware Diagnostics UEFI 75
Starting HP PC Hardware Diagnostics UEFI through HP Hotkey Support software (select products only) 76
Downloading HP PC Hardware Diagnostics UEFI to a USB flash drive 76
Downloading the latest HP PC Hardware Diagnostics UEFI version 77
Downloading HP PC Hardware Diagnostics UEFI by product name or number (select products only) 77

Using Remote HP PC Hardware Diagnostics UEFI settings (select products only) 77
Downloading Remote HP PC Hardware Diagnostics UEFI 77
Downloading the latest Remote HP PC Hardware Diagnostics UEFI version 77
Downloading Remote HP PC Hardware Diagnostics UEFI by product name or number 78
Customizing Remote HP PC Hardware Diagnostics UEFI settings 78

10 Specifications 79

Computer specifications 79

Display specifications 79

Solid-state drive specifications 80

11 Power cord set requirements 82

Requirements for all countries 82

Requirements for specific countries and regions 82

12 Statement of memory volatility 85

Current BIOS steps 85

Nonvolatile memory usage 87

Questions and answers 88

Using HP Sure Start (select products only) 89

13 Swelling or deformation of notebook battery 90

Swollen notebook batteries 90
Swollen battery is not a safety issue 90
Discontinue using a swollen battery 90
Replace a swollen battery 90
Minimize battery swelling 90
HP Adaptive Battery Optimizer (consumer notebooks) 91
HP Battery Health Manager (commercial notebooks) 91
14 Recycling 92
Index 93

1 Product description

This table provides detailed product information.

Table 1-1 **Product components and their descriptions**

Category	Description
Product Name	**HP 17 Laptop AI PC**
	Model numbers: 17-cn5xxx
	CTO model number: 17t-cn500
Processors	**Intel® processors**
	Intel Core™ Ultra7 255U processor
	Intel Core Ultra5 225U processor
Graphics	**Internal graphics**
	Intel Graphics
Display	**43.9 cm (17.3 in), LED, antiglare**
	Full high definition (FHD) (1920 × 1080), UWVA, 45% NTSC, 300 nits, eDP 1.2 without PSR
	HD+ (1600 × 900), SVA, 60% NTSC, 250 nits, eDP 1.2 without PSR, 60 Hz, touch-on panel (TOP)
	HD+ (1600 × 900), SVA, 60% NTSC, 250 nits, eDP 1.2 without PSR, 60 Hz
	• 16:9 aspect ratio
	• Flicker free
	• Screen-to-body ratio: 84%
Memory	Not customer-accessible
	DDR5-5600 dual-channel support
	Supports the following configurations:
	• 16 GB
	• 8 GB
Primary storage	**M.2 2280 solid-state drives (NVMe)**
	1 TB, PCIe
	512 GB, PCIe
	256 GB, PCIe
Audio and video	**HP TrueVision FHD Camera: indicator LED, USB2.0, HD BSI sensor, f2.0, 80° NFOV**
	1080p by 30 frames per second
	HP TrueVision HD Camera: indicator LED, USB2.0, HD BSI sensor, f2.0, 76° NFOV
	720p by 30 frames per second

Table 1-1 Product components and their descriptions (continued)

Category	Description
	• Dual array digital microphone with appropriate software: beam forming, echo cancellation, and noise suppression
	• Dual speakers
	• Supports XiaoWei
Wireless	**Wireless Local Area Network (WLAN)** (dual antennas)
	Realtek 8852BE-VT Wi-Fi® 6 Bluetooth® 5.4
	MediaTek MT7920 Wi-Fi 6 + Bluetooth 5.4
	Compatible with Miracast® devices
	Supports modern standby (connected)
Ports	HDMI 1.4b (supports up to 1920 × 1080 @ 60 Hz)
	Audio-out (headphone)/audio-in (microphone) combo jack
	USB 3.2 Gen 2 Type-C® (left side), supports: • Power delivery • Data transfer • DisplayPort™ 1.4 out up to 4 K (60 Hz) and HDMI 1.4 out through adapter • HP Sleep & Charge
	USB 3.2 Gen 1 Type-A port (left and right sides)
	AC Smart Pin adapter plug
Keyboard/pointing devices	**Keyboard**
	Full size, island style, textured, with numeric keypad
	Haptic clickpad with image sensor
	Multitouch gestures enabled
	Precision touchpad support
	Modern trackpad gestures
	Taps enabled as default
	Brightness, volume, SmartAdapt Mode Switch gesture support
Power requirements	**Battery**
	3 cell, 41 Whr
	Long life
	Fast charge technology
	Smart AC adapters (select products only)
	45 W, right angle, nPFC, 4.5 mm
	Power cord
	C5, conventional, 1.0 m (3.3 ft), sticker

Table 1-1 Product components and their descriptions (continued)

Category	Description
Security	Trusted Platform Module (TPM) 2.0
	Fingerprint reader (select products only)
	Camera privacy cover
Operating system	Windows® 11 Pro
	Windows 11 Home 64 Advanced
	Windows 11 Pro High End
	Windows 11 Pro High End China
	Windows 11 Pro China
	Windows 11 Pro Value
	Windows 11 Pro Value China
	Windows 11 Pro Entry
	Windows 11 Pro Entry China
	Windows 11 Home 64 Desktop AIO Chinese Market CPPP
	Windows 11 Home in S Mode for Developed Markets (ML)
	Windows 11 Home in S Mode Advanced ML
	Windows 11 Home in S Mode Plus ML
	Windows 11 Home in S Mode ML
	Windows 11 Home in S Mode Value ML
	Windows 11 Home in S Mode Entry ML
	Windows 11 Home in S Mode for Emerging Markets (EM/SL)
	Windows 11 Home in S Mode Advanced SL
	Windows 11 Home in S Mode Plus SL
	Windows 11 Home in S Mode SL
	Windows 11 Home in S Mode Value SL
	Windows 11 Home in S Mode Entry SL
	Windows 11 Home in S Mode for China Market
	Windows 11 Home in S Mode High End CPPP
	Windows 11 Home in S Mode CPPP
	Windows 11 Home in S Mode for APAC Markets
	Windows 11 Home in S Mode Plus SL APAC PPP
	Windows 11 Home in S Mode SL APAC PPP
	Windows 11 Home in S Mode Value SL APAC PPP
	Windows 11 Home in S Mode Entry SL APAC PPP
	Windows 11 Home in S Mode for Africa Markets

Table 1-1 Product components and their descriptions (continued)

Category	Description
	Windows 11 Home in S Mode SL Africa PPP
	Windows 11 Home in S Mode for Indonesia Market
	Windows 11 Home in S Mode Plus SL Indonesia PPP (IDPPP)
	Windows 11 Home in S Mode SL Indonesia PPP (IDPPP)
	Windows 11 Home in S Mode Value SL Indonesia PPP (IDPPP)
	Windows 11 Home in S Mode Entry SL Indonesia PPP (IDPPP)
	Windows 11 Home in S Mode for India Market
	Windows 11 Home in S Mode Plus SL India PPP (IPPP)
	Windows 11 Home in S Mode SL India PPP (IPPP)
	Windows 11 Home in S Mode Value SL India PPP (IPPP)
	Windows 11 Home in S Mode Entry SL India PPP (IPPP)
	Windows 11 Home for Developed Market (ML)
	Windows 11 Home Advanced ML
	Windows 11 Home Plus ML
	Windows 11 Home ML
	Windows 11 Home for Developed Market (ML)
	Windows 11 Home Advanced ML
	Windows 11 Home Plus ML
	Windows 11 Home ML
	Windows 11 Home for Emerging Market (EM/SL)
	Windows 11 Home Advanced SL
	Windows 11 Home Plus SL
	Windows 11 Home SL
	Windows 11 Home Value SL
	Windows 11 Home Entry SL
	Windows 11 Home for China Market
	Windows 11 Home High End China PPP (CPPP)
	Windows 11 Home China PPP (CPPP)
	Windows 11 Home for India Market
	Windows 11 Home Plus SL India PPP (IPPP)
	Windows 11 Home SL India PPP (IPPP)
	Windows 11 Home Value SL India PPP (IPPP)
	Windows 11 Home Entry SL India PPP (IPPP)
	Windows 11 Home for Indonesia Market

Table 1-1 Product components and their descriptions (continued)

Category	Description
	Windows 11 Home Plus SL Indonesia PPP (IDPPP)
	Windows 11 Home SL Indonesia PPP (IDPPP)
	Windows 11 Home Value SL Indonesia PPP (IDPPP)
	Windows 11 Home Entry SL Indonesia PPP (IDPPP)
	Windows 11 Home for APAC Market
	Windows 11 Home Plus SL APAC PPP
	Windows 11 Home SL APAC PPP
	Windows 11 Home Value SL APAC PPP
	Windows 11 Home Entry SL APAC PPP
	Windows 11 Home for Africa PPP Market
	Windows 11 Home Plus SL Africa PPP
	Windows 11 Home SL Africa PPP
	Windows 11 Home Value SL Africa PPP
	Windows 11 Home Entry SL Africa PPP
	FreeDOS 3.0
Serviceability	**End user replaceable parts**
	AC adapter
	Battery

2 Getting to know your computer

Your computer features top-rated components. This chapter provides details about your components, where they are located, and how they work.

Right side

Identify the components on the right side of the computer.

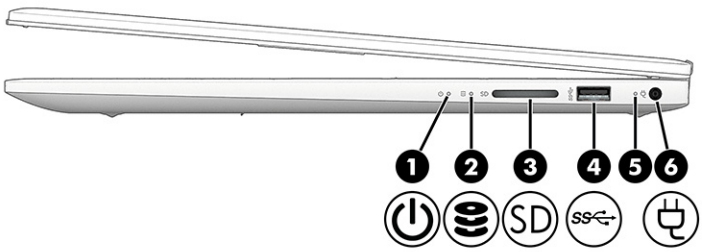

Table 2-1 Right-side components and their descriptions

		Component	Description
(1)		Power light	• On: The computer is on. • Blinking (select products only): The computer is in the Sleep state, a power-saving state. The computer shuts off power to the display and other unnecessary components. • Off: Depending on your computer model, the computer is off, in Hibernation, or in Sleep. Hibernation is the power-saving state that uses the least amount of power.
(2)		Drive light	• Blinking white: The hard drive is being accessed.
(3)	SD	Memory card reader (select products only)	Reads optional memory cards that enable you to store, manage, share, or access information. To insert a card: 1. Hold the card label-side up, with connectors facing the computer. 2. Insert the card into the memory card reader, and then press in on the card until it is firmly seated. To remove a card: ▪ Pull the card out of the memory card reader.

Table 2-1 Right-side components and their descriptions (continued)

	Component	Description
(4)	USB 5 Gbps port	Connects a USB device, provides high-speed data transfer, and (for select products) charges small devices (such as a smartphone) when the computer is on or in Sleep mode. NOTE: Use a standard USB Type-A charging cable or cable adapter (purchased separately) when charging a small external device.
(5)	AC adapter and battery light	• White: The AC adapter is connected and the battery is fully charged. • Blinking amber: The AC adapter is disconnected and the battery has reached a low battery level. • Amber: The AC adapter is connected and the battery is charging. • Off: The battery is not charging.
(6)	Power connector	Connects an AC adapter.

Left side

Identify the components on the left side of the computer.

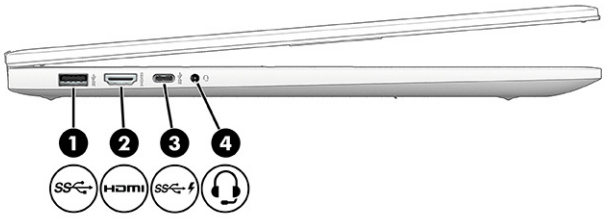

Table 2-2 Left-side components and their descriptions

	Component	Description
(1)	USB 5 Gbps port	Connects a USB device, provides high-speed data transfer, and (for select products) charges small devices (such as a smartphone) when the computer is on or in Sleep mode. NOTE: Use a standard USB Type-A charging cable or cable adapter (purchased separately) when charging a small external device.
(2)	HDMI port	Connects an optional video or audio device, such as a high-definition television, any compatible digital or audio component, or a high-speed High-Definition Multimedia Interface (HDMI) device.

Table 2-2 Left-side components and their descriptions (continued)

		Component	Description
(3)		USB Type-C® 10 Gbps port	Connects a USB device, provides high-speed data transfer, and (for select products) charges small devices (such as a smartphone) when the computer is on or in Sleep mode. NOTE: Use a standard USB Type-C charging cable or cable adapter (purchased separately) when charging a small external device.
(4)		Audio-out (headphone)/Audio-in (microphone) combo jack	Connects optional powered stereo speakers, headphones, earbuds, a headset, or a television audio cable. Also connects an optional headset microphone. This jack does not support optional standalone microphones. WARNING! To reduce the risk of personal injury, adjust the volume before putting on headphones, earbuds, or a headset. For additional safety information, see the *Regulatory, Safety, and Environmental Notices*. To access this guide: ■ Select the **Search** icon in the taskbar, type `HP Documentation` in the search box, and then select **HP Documentation**. NOTE: When a device is connected to the jack, the computer speakers are disabled.

Display

The computer display can include essential components such as speakers, antennas, cameras, and microphones.

Low blue light mode (select products only)

Your computer display is shipped from the factory in low blue light mode for improved eye comfort and safety. Also, blue light mode automatically adjusts blue light emissions when you are using the computer at night or for reading.

⚠ WARNING! To reduce the risk of serious injury, read the *Safety & Comfort Guide*. It describes proper workstation setup and proper posture, health, and work habits for computer users. The *Safety & Comfort Guide* also provides important electrical and mechanical safety information. The *Safety & Comfort Guide* is available on the web at http://www.hp.com/ergo.

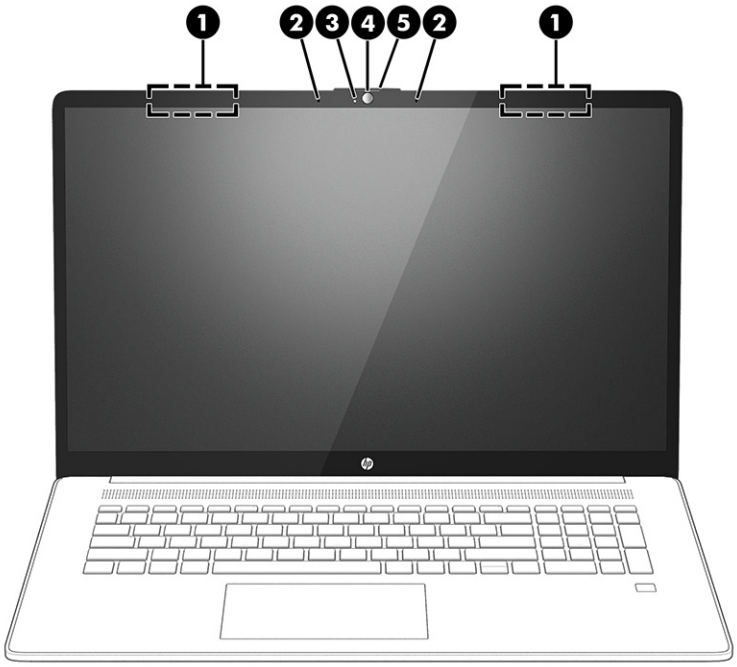

Table 2-3 **Display components and their descriptions**

	Component	Description
(1)	WLAN antennas (2)*	Send and receive wireless signals to communicate with wireless local area networks (WLANs).
(2)	Internal microphones (2)	Record sound.
(3)	Camera light	On: The camera is in use.
(4)	Camera	Allows you to video chat, record video, and record still images. Some cameras also allow a facial recognition logon to Windows®, instead of a password logon. NOTE: Camera functions vary depending on the camera hardware and software installed on your product.
(5)	Manual camera shutter	Allows you to open or close the camera shutter by sliding the latch. • Slide it to the left to close the shutter. • Slide it to the right to open the shutter.

*The antennas are not visible from the outside of the computer. For optimal transmission, keep the areas immediately around the antennas free from obstructions.

For wireless regulatory notices, see the section of the *Regulatory, Safety, and Environmental Notices* that applies to your country or region.

To access this guide:

- Select the **Search** icon in the taskbar, type `HP Documentation` in the search box, and then select **HP Documentation**.

Keyboard area

Keyboards can vary by language.

NOTE: The keyboard area, including the function keys and (select products only) power key, is disabled in stand, tent, and tablet modes. To enable the keyboard, including the power key, change to the clamshell mode.

Touchpad settings and components

Learn the touchpad settings and components.

Touchpad settings

Learn how to adjust touchpad settings.

Adjusting touchpad settings

Use these steps to adjust touchpad settings and gestures.

1. Select the **Search** icon in the taskbar, type `touchpad settings` in the search box, and then press enter.
2. Choose a setting.

Turning on the touchpad

Follow these steps to turn on the touchpad.

1. Select the **Search** icon in the taskbar, type `touchpad settings` in the search box, and then press enter.
2. Using an external mouse, click the **touchpad** button.

   If you are not using an external mouse, press the Tab key repeatedly until the pointer rests on the **touchpad** button. Then press the spacebar to select the button.

Touchpad components

Identify the touchpad components.

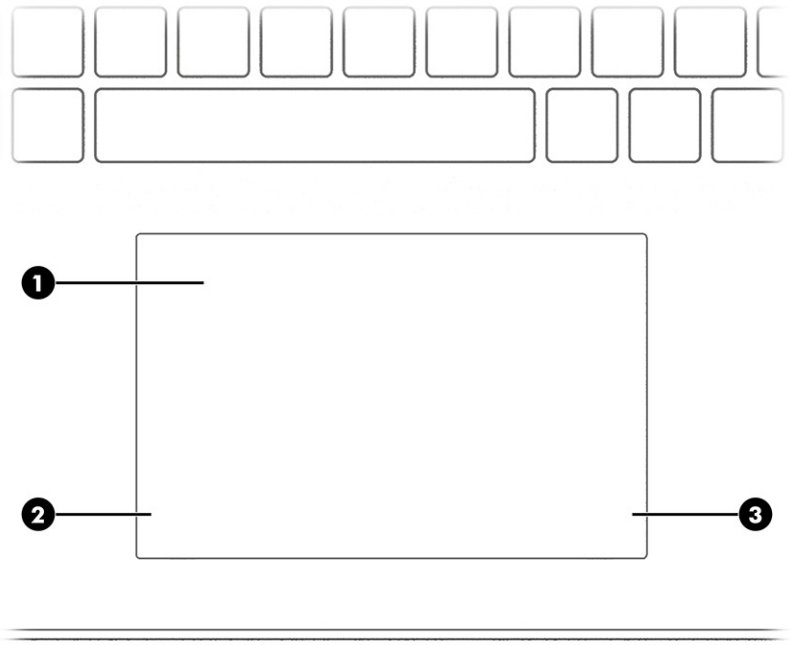

Table 2-4 Touchpad components and their descriptions

	Component	Description
(1)	Touchpad zone	Reads your finger gestures to move the pointer or activate items on the screen.
(2)	Left control zone	Textured area that allows you to perform additional gestures.
(3)	Right control zone	Textured area that allows you to perform additional gestures.

Lights

Identify the lights on the computer.

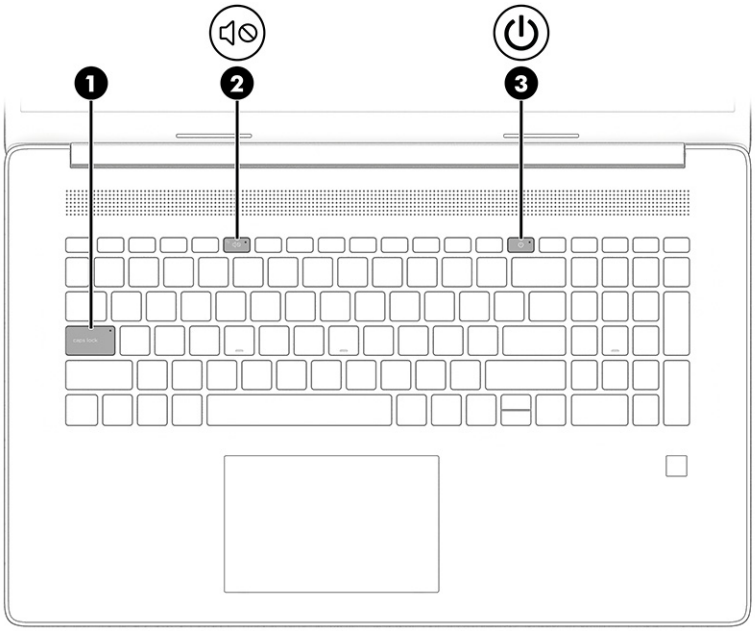

Table 2-5 Lights and their descriptions

		Component	Description
(1)		Caps lock light	On: Caps lock is on, which switches the key input to all capital letters.
(2)		Mute light	• On: Computer sound is off. • Off: Computer sound is on.
(3)		Power light	• On: The computer is on. • Blinking (select products only): The computer is in the Sleep state, a power-saving state. The computer shuts off power to the display and other unnecessary components. • Off: Depending on your computer model, the computer is off, in Hibernation, or in Sleep. Hibernation is the power-saving state that uses the least amount of power.

Button, speakers, and fingerprint reader

Identify the computer button, speakers and fingerprint reader.

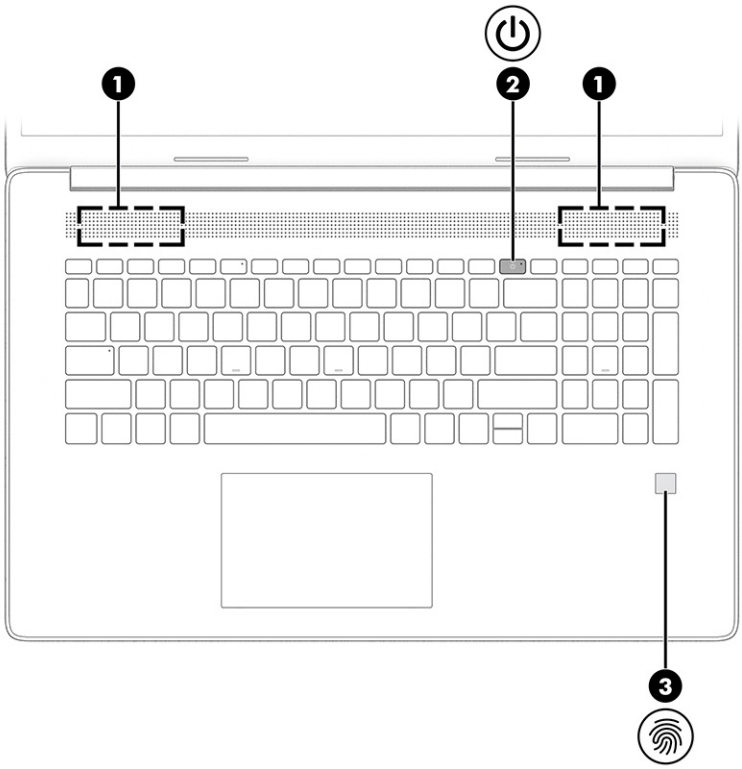

Fingerprint readers, which enable a fingerprint logon, can be located on the touchpad, on a side panel of the computer, or on the top cover below the keyboard.

IMPORTANT: To verify that your computer supports fingerprint reader sign-in, select the **Search** icon in the taskbar, type `Sign-in options` in the search box, and follow the on-screen instructions. If **Fingerprint reader** is not listed as an option, then your computer does not include a fingerprint reader.

Table 2-6 **Button, speakers, and fingerprint reader and their descriptions**

	Component	Description
(1)	Speakers (2)	Produce sound.

Table 2-6 **Button, speakers, and fingerprint reader and their descriptions (continued)**

		Component	Description
(2)		Power button	• When the computer is off, press the button briefly to turn on the computer. • When the computer is on, press the button briefly to initiate Sleep. • When the computer is in the Sleep state, press the button briefly to exit Sleep (select products only). • When the computer is in Hibernation, press the button briefly to exit Hibernation. IMPORTANT: Pressing and holding down the power button results in the loss of unsaved information. If the computer has stopped responding and shutdown procedures are ineffective, press and hold the power button down for at least 10 seconds to turn off the computer. To learn more about your power settings, see your power options: ▪ Right-click the **Power** icon, and then select **Power Options**.
(3)		Fingerprint reader (select products only)	Allows a fingerprint logon to Windows, instead of a password logon. ▪ Swipe down across the fingerprint reader. IMPORTANT: To prevent fingerprint logon issues, make sure when you register your fingerprint that all sides of your finger are registered by the fingerprint reader.

Special keys

Identify the special keys.

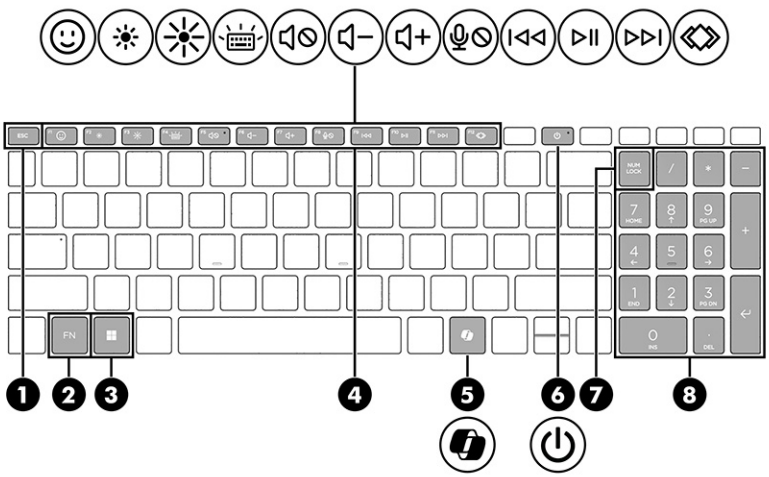

Table 2-7 **Special keys and their descriptions**

	Component	Description
(1)	esc key	Displays system information when pressed in combination with the fn key.
(2)	fn key	Executes specific functions when pressed in combination with another key.
(3)	Windows key	Opens the Start menu. NOTE: Pressing the Windows key again will close the Start menu.
(4)	Action keys	Execute frequently used system functions as defined by the icon symbols on f1 through f12 function keys.
(5)	Windows Copilot key	Opens Windows Copilot (select products only). NOTE: Copilot in Windows (select products only) requires Windows 11. Some features require a neural processing unit (NPU). The timing of feature delivery and availability varies by market and device. You must have a Microsoft account to use the Copilot feature. When the Copilot feature is not available, pressing the Copilot key opens the Bing search engine. See http://aka.ms/WindowsAIFeatures.
(6)	Power button	• When the computer is off, press the button briefly to turn on the computer. • When the computer is on, press the button briefly to initiate Sleep. • When the computer is in the Sleep state, press the button briefly to exit Sleep (select products only). • When the computer is in Hibernation, press the button briefly to exit Hibernation. IMPORTANT: Pressing and holding down the power button results in the loss of unsaved information. If the computer has stopped responding and shutdown procedures are ineffective, press and hold the power button down for at least 10 seconds to turn off the computer. To learn more about your power settings, see your power options: ▪ Right-click the **Power** icon, and then select **Power Options**.
(7)	num lock key	Alternates between the navigational and numeric functions on the integrated numeric keypad.
(8)	Integrated numeric keypad	A separate keypad to the right of the alphabet keyboard. When num lock is pressed, the keypad can be used like an external numeric keypad. NOTE: If the keypad function is active when the computer is turned off, that function is reinstated when the computer is turned back on.

Bottom

Identify the bottom component.

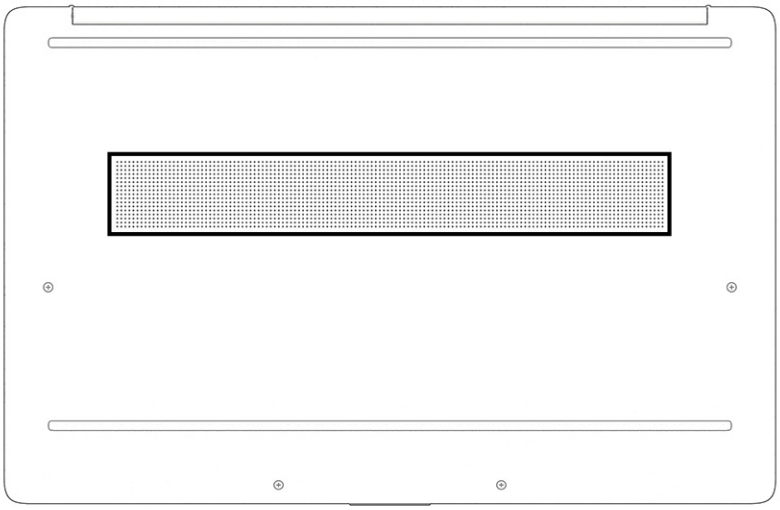

Table 2-8 **Bottom component and its description**

Component	Description
Vent	Enables airflow to cool internal components. NOTE: The computer fan starts up automatically to cool internal components and prevent overheating. It is normal for the internal fan to cycle on and off during routine operation.

Labels

The labels affixed to the computer provide information that you might need when you troubleshoot system problems or travel internationally with the computer. Labels can be in paper form or imprinted on the product.

IMPORTANT: Check the following locations for the labels described in this section: the bottom of the computer, inside the battery bay, under the service door, on the back of the display, or on the bottom of a tablet kickstand.

- Service label—Provides important information to identify your computer. When contacting support, you might be asked for the serial number, the product number, or the model number. Locate this information before you contact support.

  Your service label will resemble the following example.

Table 2-9 **Service label components**

	Component
(1)	Serial number
(2)	Product ID
(3)	HP product name and model number

- Regulatory labels—Provide regulatory information about the computer.
- Wireless certification labels—Provide information about optional wireless devices and the approval markings for the countries or regions in which the devices have been approved for use.

3 Illustrated parts catalog

Use this chapter to determine the spare parts that are available for the computer.

Computer major components

To identify the computer major components, use this illustration and table.

NOTE: HP continually improves and changes product parts. For complete and current information about supported parts for your computer, go to http://partsurfer.hp.com, select your country or region, and then follow the on-screen instructions.

NOTE: Details about your computer, including model, serial number, product key, and length of warranty, are on the service tag at the bottom of your computer.

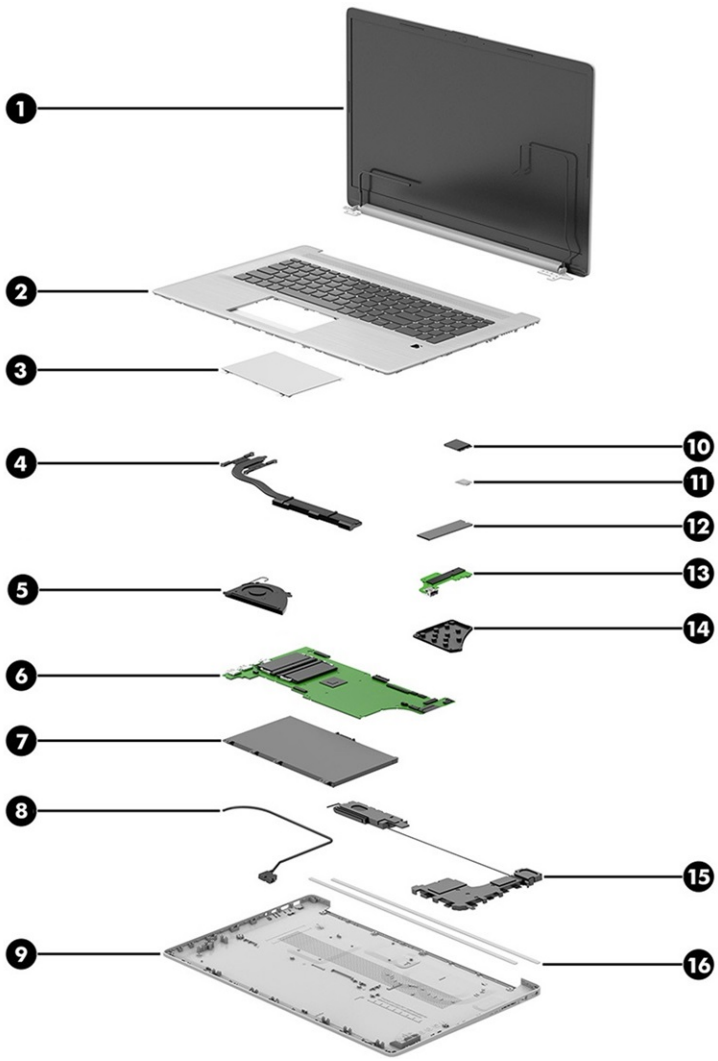

Table 3-1 **Computer major component descriptions and part numbers**

Item	Component	Spare part number
(1)	**Display assembly** NOTE: Display spare parts are available only as subcomponents.	not available as a spare part
(2)	**Top cover/keyboard**	
	Jet black, not backlit	M50468-xx1
	Jet black,, not backlit, fingerprint reader	M50469-xx1
	Jet black, not backlit, Copilot key	P27410-xx1
	Jet black, not backlit, fingerprint reader, Copilot key	P27409-xx1
	Natural silver, soft gray, not backlit	N39375-xx1
	Natural silver, soft gray, backlit	N39376-xx1
	Natural silver, soft gray, not backlit, fingerprint reader	N39377-xx1
	Natural silver, soft gray, backlit, fingerprint reader	N39378-xx1
	Natural silver, soft gray, not backlit, Copilot key	P27407-xx1
	Natural silver, soft gray, backlit, Copilot key	P27408-xx1
	Natural silver, soft gray, not backlit, fingerprint reader, Copilot key	P27405-xx1
	Natural silver, soft gray, backlit, fingerprint reader, Copilot key	P27406-xx1
(3)	**Touchpad** NOTE: The touchpad cable is available as spare part number M50423-001.	
	Jet black	M50414-001
	Natural silver	M50416-001
(4)	**Heat sink** (includes replacement thermal material)	N24335-001
(5)	**Fan**	M50402-001
(6)	**System board** (includes integrated processor)	
	Intel Core Ultra7 255U processor	P29834-601
	Intel Core Ultra5 225U processor	P29833-601
(7)	**Battery** (3 cell, 41 Whr)	L97300-005
(8)	**Power connector cable**	M50400-001
(9)	**Bottom cover**	
	Jet black	N20558-001
	Natural silver	N20560-001
	Natural silver, 50% post-consumer recycled (PCR) plastic	N85874-001
(10)	**WLAN module**	
	Realtek 8852BE-VT Wi-Fi 6 Bluetooth 5.4	P06350-005
	MediaTek MT7920 Wi-Fi 6 + Bluetooth 5.4	P17386-005
	Memory modules (DDR5-5600, not illustrated)	

Table 3-1 Computer major component descriptions and part numbers (continued)

Item	Component	Spare part number
	8 GB	N77398-005
(11)	**Fingerprint reader** NOTE: The fingerprint reader cable is available as spare part number M50424-001.	M50419-001
(12)	**Solid-state drive** (PCIe)	
	1 TB	L85370-005
	512 GB, PCIe-4 × 4	N45476-005
	512 GB	L85364-005
	256 GB, PCIe-4 × 4	N45477-005
	256 GB	L85354-005
(13)	**USB board** NOTE: The USB board cable is available as spare part number M50422-001.	M50413-001
(14)	**Fan insert**	not available as a spare part
(15)	**Speakers** (left and right)	M50412-001
(16)	**Rubber feet**	
	Jet black	M50428-001
	Natural silver	M50430-001

Display assembly subcomponents

To identify the display assembly subcomponents, use this illustration and table.

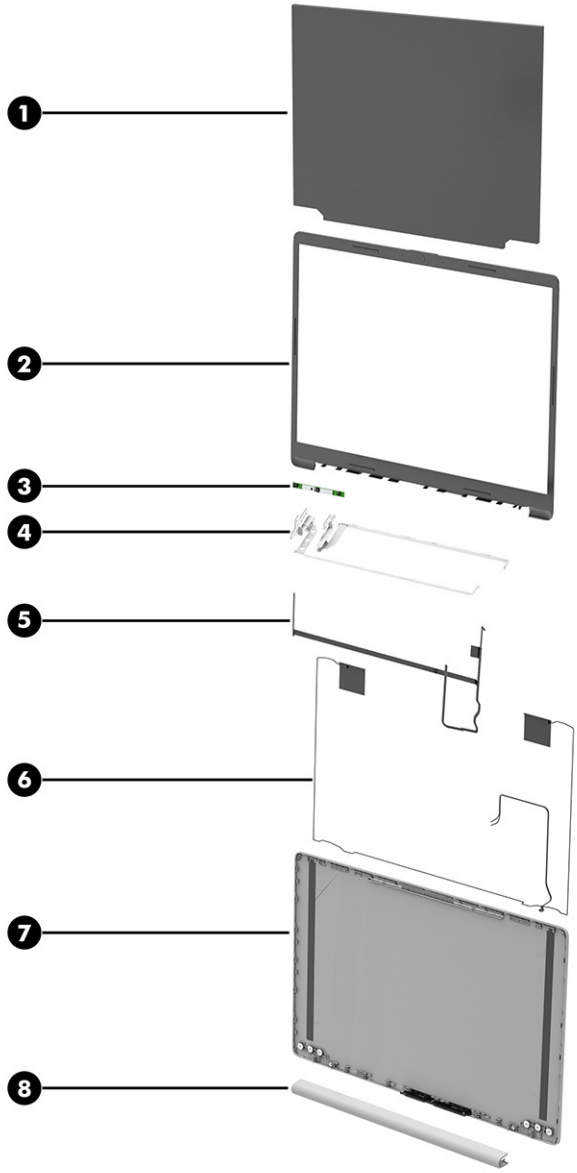

Table 3-2 Display component descriptions and part numbers

Item	Component	Spare part number
(1)	**Display panel**	
	NOTE: Display panel adhesive is available as spare part number M50435-001.	
	FHD, UWVA, 300 nits	N85872-001
	HD+, SVA, 250 nits, touch	P25425-001
	HD+, SVA, 250 nits., nontouch	N39380-001
(2)	**Display bezel**	N39383-001
(3)	**Camera module**	
	FHD	N85873-001

Table 3-2 **Display component descriptions and part numbers (continued)**

Item	Component	Spare part number
	HD	N39387-001
(4)	**Hinges** (left and right)	M50409-001
(5)	**Display and camera cable**	
	FHD	N39385-001
	HD, touch	N39386-001
	HD, nontouch	N39384-001
(6)	**WLAN antennas and cables**	M50375-001
(7)	**Display back cover** (includes antenna)	
	Jet black, single antenna	N39353-001
	Jet black, dual antennas	N39354-001
	Natural silver, single antenna	N39357-001
	Natural silver, single antenna, touch screen	N39358-001
	Natural silver, dual antennas, touch screen	N39360-001
	Pale rose gold, single antenna	N39361-001
	Pale rose gold, single antenna, touch screen	N39362-001
	Pale rose gold, dual antennas	N39363-001
	Pale rose gold, dual antennas, touch screen	N39364-001
	Midnight blue, single antenna	N39367-001
	Midnight blue, single antenna, touch screen	N39368-001
	Midnight blue, dual antennas	N39369-001
	Midnight blue, dual antennas, touch screen	N39370-001
(8)	**Hinge cover**	
	Jet black	N20564-001
	Natural silver	N20566-001
	Pale rose gold	N20569-001
	Midnight blue	N39388-001

Miscellaneous parts

To identify the miscellaneous parts, use this table.

Table 3-3 **Miscellaneous part descriptions and part numbers**

Component	Spare part number
AC adapters	
45 W, nPFC, SMART, RC, 4.5 mm, nonslim	741727-001

Table 3-3 **Miscellaneous part descriptions and part numbers (continued)**

Component	Spare part number
Screw Kit	M50411-001
HP wireless mouse	M53554-001
HP 240 Bluetooth mouse, black	M61216-001
HP Z3700 wireless dual mouse, silver	N33387-001
HP USB external DVD drive	747080-001
Power cord (C5, conventional, 1.0 m [3.3 ft])	
Australia	L19358-001
Denmark	L19360-001
Europe (Austria, Belgium, Finland, France, Germany, the Netherlands, Norway, and Sweden)	L19361-001
India	L19363-001
Israel	L19362-001
North America	L19367-001
The People's Republic of China	L19368-001
South Korea	L19366-001
Switzerland	L19370-001
Taiwan	L19372-001
The United Kingdom	L19373-001

4 Removal and replacement procedures preliminary requirements

Use this information to properly prepare to disassemble and reassemble the computer.

Tools required

You need the following tools to complete the removal and replacement procedures:

- Tweezers
- Nonconductive, nonmarking pry tool
- Magnetic Phillips P1 screwdriver

Service considerations

The following sections include some of the considerations that you must keep in mind during disassembly and assembly procedures.

NOTE: As you remove each subassembly from the computer, place the subassembly and all accompanying screws away from the work area to prevent damage.

Plastic parts

Using excessive force during disassembly and reassembly can damage plastic parts.

Cables and connectors

Handle cables with extreme care to avoid damage.

IMPORTANT: When servicing the computer, be sure that cables are placed in their proper locations during the reassembly process. Improper cable placement can damage the computer.

Apply only the tension required to unseat or seat the cables during removal and insertion. Handle cables by the connector whenever possible. In all cases, avoid bending, twisting, or tearing cables. Be sure that cables are routed so that they cannot be caught or snagged as you remove or replace parts. Handle flex cables with extreme care; these cables tear easily.

Drive handling

Note the following guidelines when handling drives.

IMPORTANT: Drives are fragile components. Handle them with care. To prevent damage to the computer, damage to a drive, or loss of information, observe these precautions:

- Before removing or inserting a hard drive, shut down the computer. If you are unsure whether the computer is off or in Hibernation or Sleep mode, turn the computer on, and then shut it down through the operating system.

- Before handling a drive, be sure that you are discharged of static electricity. While handling a drive, avoid touching the connector.
- Before removing an optical drive, be sure that a disc is not in the drive, and be sure that the optical drive tray is closed.
- Handle drives on surfaces covered with at least 2.54 cm (1 inch) of shock-proof foam.
- Avoid dropping drives from any height onto any surface.
- After removing a hard drive or an optical drive, place it in a static-proof bag.
- Avoid exposing an internal hard drive to products that have magnetic fields, such as monitors or speakers.
- Avoid exposing a drive to temperature extremes or liquids.
- If a drive must be mailed, place the drive in a bubble pack mailer or other suitable form of protective packaging, and label the package "FRAGILE."

Electrostatic discharge information

A sudden discharge of static electricity from your finger or other conductor can destroy static-sensitive devices or microcircuitry. Often the spark is neither felt nor heard, but damage occurs. An electronic device exposed to electrostatic discharge (ESD) might not appear to be affected at all and can work perfectly throughout a normal cycle. The device might function normally for a while, but it has been degraded in the internal layers, reducing its life expectancy.

Networks built into many integrated circuits provide some protection, but in many cases, the discharge contains enough power to alter device parameters or melt silicon junctions.

IMPORTANT: To prevent damage to the device when you remove or install internal components, observe these precautions:

- Keep components in their electrostatic-safe containers until you are ready to install them.
- Before touching an electronic component, discharge static electricity by using the guidelines described in Personal grounding methods and equipment on page 26.
- Avoid touching pins, leads, and circuitry. Handle electronic components as little as possible.
- If you remove a component, place it in an electrostatic-safe container.

Generating static electricity

Follow these static electricity guidelines:

- Different activities generate different amounts of static electricity.
- Static electricity increases as humidity decreases.

Table 4-1 **Static electricity occurrence based on activity and humidity**

Event	55% relative humidity	40% relative humidity	10% relative humidity
Walking across carpet	7,500 V	15,000 V	35,000 V
Walking across vinyl floor	3,000 V	5,000 V	12,000 V
Motions of bench worker	400 V	800 V	6,000 V
Removing dual in-line packages (DIPs) from plastic tube	400 V	700 V	2,000 V
Removing DIPs from vinyl tray	2,000 V	4,000 V	11,500 V
Removing DIPs from polystyrene foam	3,500 V	5,000 V	14,500 V
Removing bubble pack from PCB (printed circuit board)	7,000 V	20,000 V	26,500 V
Packing PCBs in foam-lined box	5,000 V	11,000 V	21,000 V

NOTE: Multiple electric components can be packaged together in plastic tubes, trays, or polystyrene foam.

As little as 700 V of static electricity can degrade a product.

Preventing electrostatic damage to equipment

Many electronic components are sensitive to ESD. Circuitry design and structure determine the degree of sensitivity.

The following packaging and grounding precautions are necessary to prevent static electricity damage to electronic components:

- To avoid hand contact, transport products in static-safe containers such as tubes, bags, or boxes.
- Protect all electrostatic parts and assemblies with conductive or approved containers or packaging.
- Keep electrostatic-sensitive parts in their containers until they arrive at static-free stations.
- Place items on a grounded surface before removing them from their container.
- Always be properly grounded when touching a sensitive component or assembly.
- Avoid contact with pins, leads, or circuitry.
- Place reusable electrostatic-sensitive parts from assemblies in protective packaging or conductive foam.

Personal grounding methods and equipment

Using certain equipment can prevent static electricity damage to electronic components.

- **Wrist straps** are flexible straps with a maximum of 1 MΩ ±10% resistance in the ground cords. To provide proper ground, wear a strap snug against bare skin. Verify that the ground cord is connected and fits snugly into the banana plug connector on the grounding mat or workstation.
- You can use **heel straps, toe straps, and boot straps** at standing workstations. These straps are compatible with most types of shoes or boots. On conductive floors or dissipative floor mats, use them on both feet with a maximum of 1 MΩ ±10% resistance between the operator and ground.

Table 4-2 **Static shielding protection levels**

Method	Voltage
Antistatic plastic	1,500
Carbon-loaded plastic	7,500
Metallized laminate	15,000

Grounding the work area

To prevent static damage at the work area, follow these precautions:

- Cover the work surface with approved static-dissipative material.
- Use a wrist strap connected to a properly grounded work surface and use properly grounded tools and equipment.
- Use static-dissipative mats, foot straps, or air ionizers to give added protection.
- Handle electrostatic sensitive components, parts, and assemblies by the case or PCB laminate. Handle them only at static-free work areas.
- Turn off power and input signals before inserting and removing connectors or test equipment.
- Use fixtures made of static-safe materials when fixtures must directly contact dissipative surfaces.
- Keep the work area free of nonconductive materials, such as ordinary plastic assembly aids and polystyrene foam.
- Use conductive field service tools, such as cutters, screwdrivers, and vacuums.
- Avoid contact with pins, leads, or circuitry.

Recommended materials and equipment

HP recommends certain materials and equipment to prevent static electricity:

- Antistatic tape
- Antistatic smocks, aprons, or sleeve protectors
- Conductive bins and other assembly or soldering aids
- Conductive foam
- Conductive tabletop workstations with ground cord of 1 MΩ ±10% resistance
- Static-dissipative table or floor mats with hard tie to ground
- Field service kits
- Static awareness labels
- Wrist straps and footwear straps providing 1 MΩ ±10% resistance
- Material handling packages
- Conductive plastic bags

- Conductive plastic tubes
- Conductive tote boxes
- Opaque shielding bags
- Transparent metallized shielding bags
- Transparent shielding tubes

Cleaning your computer

Cleaning your computer regularly removes dirt and debris so that your device continues to operate at its best. Use the following information to safely clean the external surfaces of your computer.

Enabling HP Easy Clean (select products only)

HP Easy Clean helps you to avoid accidental input while you clean the computer surfaces. This software disables devices such as the keyboard, touch screen, and touchpad for a preset amount of time so that you can clean all computer surfaces.

1. Start HP Easy Clean in one of the following ways:
   - Select the **Start** menu, and then select **HP Easy Clean**.
   - Select the **HP Easy Clean** icon in the taskbar.
   - Select **Start**, and then select the **HP Easy Clean** tile.
2. Now that your device is disabled for a short period, see Removing dirt and debris from your computer on page 28 for the recommended steps to clean the high-touch, external surfaces on your computer. After you remove the dirt and debris, you can also clean the surfaces with a disinfectant. See Cleaning your computer with a disinfectant on page 29 for guidelines to help prevent the spread of harmful bacteria and viruses.

Removing dirt and debris from your computer

Here are the recommended steps to clean dirt and debris from your computer.

For computers with wood veneer, see Caring for wood veneer (select products only) on page 30.

1. Wear disposable gloves made of latex (or nitrile gloves, if you are latex-sensitive) when cleaning the surfaces.
2. Turn off your device and unplug the power cord and other connected external devices. Remove any installed batteries from items such as wireless keyboards.

   CAUTION: To prevent electric shock or damage to components, never clean a product while it is turned on or plugged in.

3. Moisten a microfiber cloth with water. The cloth should be moist, but not dripping wet.

   IMPORTANT: To avoid damaging the surface, avoid abrasive cloths, towels, and paper towels.

4. Wipe the exterior of the product gently with the moistened cloth.

IMPORTANT: Keep liquids away from the product. Avoid getting moisture in any openings. If liquid makes its way inside your HP product, it can cause damage to the product. Do not spray liquids directly on the product. Do not use aerosol sprays, solvents, abrasives, or cleaners containing hydrogen peroxide or bleach that might damage the finish.

5. Start with the display (if applicable). Wipe carefully in one direction, and move from the top of the display to the bottom. Finish with any flexible cables, like power cord, keyboard cable, and USB cables.

6. Be sure that surfaces have completely air-dried before turning the device on after cleaning.

7. Discard the gloves after each cleaning. Clean your hands immediately after you remove the gloves.

See Cleaning your computer with a disinfectant on page 29 for recommended steps to clean the high-touch, external surfaces on your computer to help prevent the spread of harmful bacteria and viruses.

Cleaning your computer with a disinfectant

The World Health Organization (WHO) recommends cleaning surfaces, followed by disinfection, as a best practice for preventing the spread of viral respiratory illnesses and harmful bacteria.

After cleaning the external surfaces of your computer using the steps in Removing dirt and debris from your computer on page 28, Caring for wood veneer (select products only) on page 30, or both, you might also choose to clean the surfaces with a disinfectant. A disinfectant that is within HP's cleaning guidelines is an alcohol solution consisting of 70% isopropyl alcohol and 30% water. This solution is also known as rubbing alcohol and is sold in most stores.

Follow these steps when disinfecting high-touch, external surfaces on your computer:

1. Wear disposable gloves made of latex (or nitrile gloves, if you are latex-sensitive) when cleaning the surfaces.

2. Turn off your device and unplug the power cord and other connected external devices. Remove any installed batteries from items such as wireless keyboards.

CAUTION: To prevent electric shock or damage to components, never clean a product while it is turned on or plugged in.

3. Moisten a microfiber cloth with a mixture of 70% isopropyl alcohol and 30% water. The cloth should be moist, but not dripping wet.

CAUTION: Do not use any of the following chemicals or any solutions that contain them, including spray-based surface cleaners: bleach, peroxides (including hydrogen peroxide), acetone, ammonia, ethyl alcohol, methylene chloride, or any petroleum-based materials, such as gasoline, paint thinner, benzene, or toluene.

IMPORTANT: To avoid damaging the surface, avoid abrasive cloths, towels, and paper towels.

4. Wipe the exterior of the product gently with the moistened cloth.

IMPORTANT: Keep liquids away from the product. Avoid getting moisture in any openings. If liquid makes its way inside your HP product, it can cause damage to the product. Do not spray liquids directly on the product. Do not use aerosol sprays, solvents, abrasives, or cleaners containing hydrogen peroxide or bleach that might damage the finish.

5. Start with the display (if applicable). Wipe carefully in one direction, and move from the top of the display to the bottom. Finish with any flexible cables, like power cord, keyboard cable, and USB cables.
6. Be sure that surfaces have completely air-dried before turning the device on after cleaning.
7. Discard the gloves after each cleaning. Clean your hands immediately after you remove the gloves.

Caring for wood veneer (select products only)

Your product might feature high-quality wood veneer. As with all natural wood products, proper care is important for best results over the life of the product. Because of the nature of natural wood, you might see unique variations in the grain pattern or subtle variations in color, which are normal.

- Clean the wood with a dry, static-free microfiber cloth or chamois.
- Avoid cleaning products containing substances such as ammonia, methylene chloride, acetone, turpentine, or other petroleum-based solvents.
- Do not expose the wood to sun or moisture for long periods of time.
- If the wood becomes wet, dry it by dabbing with an absorbent, lint-free cloth.
- Avoid contact with any substance that might dye or discolor the wood.
- Avoid contact with sharp objects or rough surfaces that might scratch the wood.

See Removing dirt and debris from your computer on page 28 for the recommended steps to clean the high-touch, external surfaces on your computer. After you remove the dirt and debris, you can also clean the surfaces with a disinfectant. See Cleaning your computer with a disinfectant on page 29 for sanitizing guidelines to help prevent the spread of harmful bacteria and viruses.

Packaging and transporting guidelines

Follow these grounding guidelines when packaging and transporting equipment:

- To avoid hand contact, transport products in static-safe tubes, bags, or boxes.
- Protect ESD-sensitive parts and assemblies with conductive or approved containers or packaging.
- Keep ESD-sensitive parts in their containers until the parts arrive at static-free workstations.
- Place items on a grounded surface before removing items from their containers.
- Always be properly grounded when touching a component or assembly.
- Store reusable ESD-sensitive parts from assemblies in protective packaging or nonconductive foam.
- Use transporters and conveyors made of antistatic belts and roller bushings. Be sure that mechanized equipment used for moving materials is wired to ground and that proper materials are selected to avoid static charging. When grounding is not possible, use an ionizer to dissipate electric charges.

Accessing support information

To find the HP support that you need, use this information.

Table 4-3 Support information locations

Service consideration	Path to access information
Records of reported failure incidents stored on the computer	**Windows®:** Preoperating system failures are logged in the BIOS Event Log. To view the BIOS Event Log: 1. Press the power button. 2. Immediately and repeatedly press esc when the power button light turns white. NOTE: If you do not press esc at the appropriate time, you must restart the computer and again repeatedly press esc when the power button light turns white to access the utility. 3. Press f10 to enter the BIOS setup. 4. Complete one of these tasks: • (On commercial products) Under the **Main** tab, select **BIOS event log**, and then select **View BIOS Event Log**. • (On consumer products) Under the **Main** tab, select **System Log**. Post-operating system failures are logged in the Event Viewer. 1. Turn on the computer and allow the operating system to open. 2. Select the search icon in the taskbar. 3. Type `Event Viewer`, and then press enter. 4. Select the log from the left panel. Details display in the right panel. **Chrome™:** 1. Go to support.google.com/chrome. 2. Search `collect Chrome device logs`.
Technical bulletins	To locate technical bulletins: 1. Go to www.hp.com. 2. Place the cursor over **Problem solving** to display more options. 3. Select **Support & Troubleshooting**. 4. Type the serial number, product number, or product name to go to the product support page. 5. Select **Advisories** to view technical bulletins.
Repair professionals	To locate repair professionals: 1. Go to www.hp.com. 2. Place the cursor over **Support resources** to display more options. 3. Select **Authorized service providers**.

Table 4-3 **Support information locations (continued)**

Service consideration	Path to access information
Component and diagnosis information, failure detection, and required action	To locate diagnosis information and actions: 1. Go to http://www.hp.com/go/techcenter/pcdiags. 2. Select **Get Support**. 3. Near the bottom of the window, select **Notebook PCs**, and then select your location.

5 Removal and replacement procedures for Customer Self-Repair parts

This chapter provides removal and replacement procedures for Customer Self-Repair parts.

NOTE: The Customer Self-Repair program is not available in all locations. Installing a part that is not supported by the Customer Self-Repair program can void your warranty. Check your warranty to determine whether Customer Self-Repair is supported in your location.

NOTE: The HP Support YouTube Channel (in English) has videos that provide step-by-step removal and replacement instructions for many common parts and models.

Component replacement procedures

To remove and replace computer components, use these procedures.

NOTE: Details about your computer, including model, serial number, product key, and length of warranty, are on the service tag at the bottom of your computer.

NOTE: HP continually improves and changes product parts. For complete and current information about supported parts for your computer, go to https://partsurfer.hp.com/, select your country or region, and then follow the on-screen instructions.

Make special note of each screw size and location during removal and replacement.

Preparation for disassembly

To remove and replace computer components, use these procedures:

For initial safety procedures, see Removal and replacement procedures preliminary requirements on page 24.

1. Turn off the computer. If you are unsure whether the computer is off or in Hibernation or Sleep mode, turn the computer on, and then shut it down through the operating system.
2. Disconnect the power from the computer by unplugging the power cord from the computer.
3. Disconnect all external devices from the computer.

Battery

The battery removal procedure differs depending on whether you are removing and replacing the existing battery or installing a new battery. To install a new battery, you must use a revive kit.

- To remove and replace the existing battery, see Removing and reinstalling the same battery on page 34.
- To install a new battery, see Installing a new battery on page 35.

Removing and reinstalling the same battery

To remove the battery and reinstall it, use this procedure and illustration.

WARNING! To avoid personal injury and damage to the product:

- Do *not* puncture, twist, or crack the battery.
- Do *not* cause an external puncture or rupture to the battery, which can cause a short inside the battery that can result in battery thermal runaway.
- Do *not* handle or touch the battery enclosure with sharp objects such as tweezers or pliers, which might puncture the battery.
- Do *not* compress or squeeze the battery case with tools or heavy objects stacked on top of the case. These actions can apply undue force on the battery.
- Do *not* touch the connectors with any metallic surface or object, such as metal tools, screws, or coins, which can cause shorting across the connectors.

For additional battery information, see the *Regulatory, Safety, and Environmental Notices*. To access this guide, select the **Search** icon in the taskbar, type `HP Documentation` in the search box, and then select **HP Documentation**.

Before removing the battery, follow these steps:

1. Prepare the computer for disassembly (see Preparation for disassembly on page 33).
2. Remove the bottom cover (see Bottom cover and rubber feet on page 40).

WARNING! To reduce potential safety issues, use only the user-replaceable battery provided with the computer, a replacement battery provided by HP, or a compatible battery purchased from HP.

IMPORTANT: Removing a battery that is the sole power source for the computer can cause loss of information. To prevent loss of information, save your work or shut down the computer through Windows before you remove the battery.

Remove the battery:

1. Remove the four Phillips M2.0 × 4.0 screws **(1)** that secure the battery to the computer.

2. Lift the bottom of the battery and remove it from the computer **(2)**.

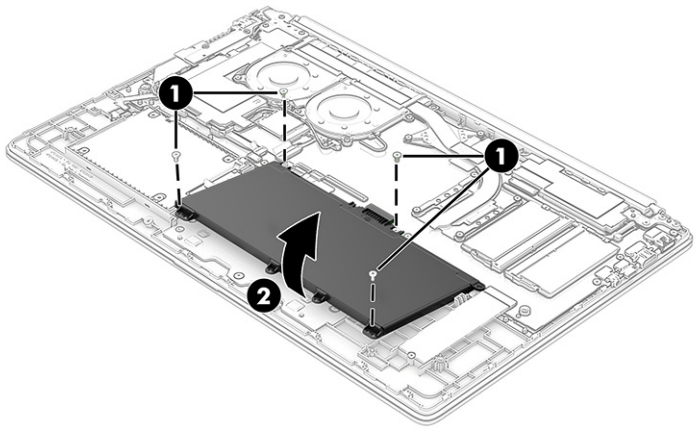

To install the battery, reverse the removal procedures.

NOTE: When reinstalling the battery, be sure to completely reassemble the computer and plug in the AC adapter before turning the computer on.

Installing a new battery

To install a battery, use these procedures and illustrations. You must use a revive kit to remove the old battery and install a new one. The revive kit includes an empty containment tray and a containment tray with a battery preinstalled.

Table 5-1 **Battery description and part number**

Description	Spare part number
Battery, 3 cell, 41 Whr	L97300-005

Before starting this replacement procedure:

- Ensure other individuals are sufficiently clear of your workspace.
- Ensure your workspace is clear of any flammable material such as paper or oils.
- Locate the nearest ABC dry chemical fire-extinguisher for use in an emergency.

WARNING! This procedure requires removing the battery or disconnecting the battery cable. Use care to avoid bending, twisting, or puncturing the battery regardless of its condition. Failure to follow this replacement guide or to use HP recommended tools might damage the system and/or cause a safety hazard.

- Do *not* remove the battery from the containment tray.
- Do *not* handle or touch the battery enclosure with sharp objects such as tweezers or pliers, which might puncture the battery.
- Do *not* touch the connectors with any metallic surface or object, such as metal tools, screws, or coins, which can cause shorting across the connectors.

Should a part become stuck or difficult to remove when opening a unit where a swollen battery is suspected, or if the battery becomes stuck in the unit, stop, and contact HP Support for assistance. Do not try to remove a battery by force.

NOTE: Screw locations, latch locations, and internal components might vary.

Before removing the battery, follow these steps:

1. Prepare the computer for disassembly (see Preparation for disassembly on page 33).
2. Remove the bottom cover (see Bottom cover and rubber feet on page 40).

WARNING! To reduce potential safety issues, use only the user-replaceable battery provided with the computer, a replacement battery provided by HP, or a compatible battery purchased from HP.

IMPORTANT: Removing a battery that is the sole power source for the computer can cause loss of information. To prevent loss of information, save your work or shut down the computer through Windows before you remove the battery.

Remove the battery:

1. To remove the battery using the revive kit:
   a. Open the empty battery containment tray.

b. Remove the paper backing layer from the adhesive on the tray.

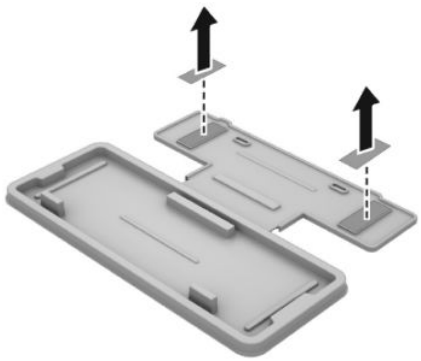

c. Turn the tray **(1)** over so that the adhesive is facing down.

d. Place the tray **(2)** centered on the battery.

e. Press down on the indentations on the tray **(3)** to adhere it to the battery.

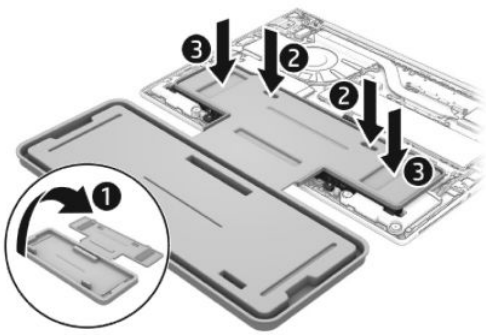

f. Remove the Phillips screws **(1)** that secure the battery to the computer. Number of screws and screw locations might vary.

g. Lift the top of the tray **(2)** to remove the battery from the computer.

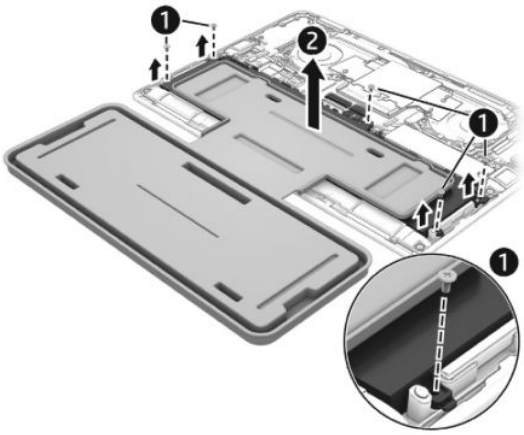

h. Rotate the battery up and over into the cavity of the containment tray.

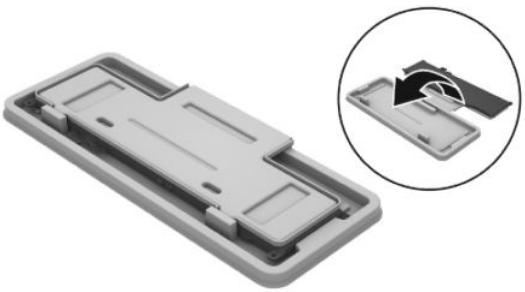

NOTE: Please recycle responsibly. For more information about recycling programs, see the HP website at http://www.hp.com/recycle.

2. To install the battery using the revive kit:

   a. Open the containment tray that includes the new battery.

   b. Turn the tray **(1)** over so the battery is facing downward, and then insert the battery **(2)** into the computer. Adhesive secures the battery to the tray.

   NOTE: To avoid damage when inserting the battery into the computer, be sure that the power connector on the battery lines up and successfully mates with the connector on the system board.

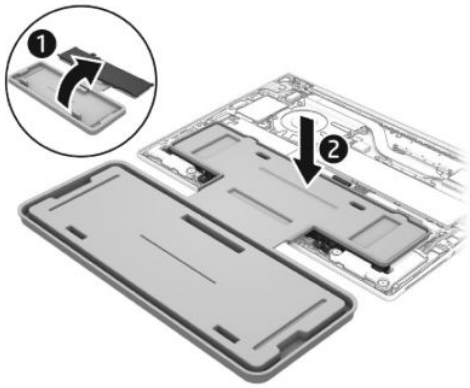

c. Install the Phillips screws **(1)** to secure the battery. Number of screws and screw locations might vary.

d. Lift the containment tray **(2)** off the battery,

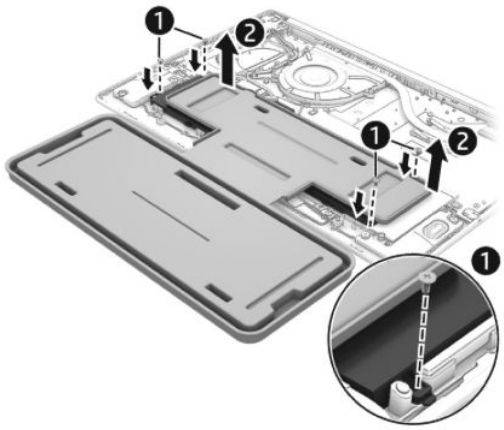

NOTE: When replacing the battery, be sure to completely reassemble the computer and plug in the AC adapter before turning the computer on.

6 Removal and replacement procedures for authorized service provider parts

This chapter provides removal and replacement procedures for authorized service provider parts.

IMPORTANT: Only an authorized service provider should access the components described in this chapter. Accessing these parts can damage the computer or void the warranty.

NOTE: Details about your computer, including model, serial number, product key, and length of warranty, are on the service tag at the bottom of your computer.

NOTE: The HP Support YouTube Channel (in English) has videos that provide step-by-step removal and replacement instructions for many common parts and models.

Component replacement procedures

To remove and replace computer components, use these procedures.

NOTE: HP continually improves and changes product parts. For complete and current information about supported parts for your computer, go to http://partsurfer.hp.com, select your country or region, and then follow the on-screen instructions.

You must remove, replace, or loosen as many as 61 screws when you service the parts described in this chapter. Make special note of each screw size and location during removal and replacement.

Preparation for disassembly

To remove and replace computer components, use these procedures:

For initial safety procedures, see Removal and replacement procedures preliminary requirements on page 24.

1. Turn off the computer. If you are unsure whether the computer is off or in Hibernation or Sleep mode, turn the computer on, and then shut it down through the operating system.
2. Disconnect the power from the computer by unplugging the power cord from the computer.
3. Disconnect all external devices from the computer.

Bottom cover and rubber feet

To remove the bottom cover and rubber feet, use this procedure and illustration.

Table 6-1 Bottom cover and rubber feet descriptions and part numbers

Description	Spare part number
Bottom cover, jet black	N20558-001
Bottom cover, natural silver	N20560-001
Bottom cover, natural silver, 50% post-consumer recycled (PCR) plastic	N85874-001

Table 6-1 **Bottom cover and rubber feet descriptions and part numbers (continued)**

Description	Spare part number
Rubber feet, jet black	M50428-001
Rubber feet, natural silver	M50430-001

Before removing the bottom cover and rubber feet, prepare the computer for disassembly (see Preparation for disassembly on page 33).

Remove the rubber feet and bottom cover:

1. Peel the feet off the bottom of the computer.

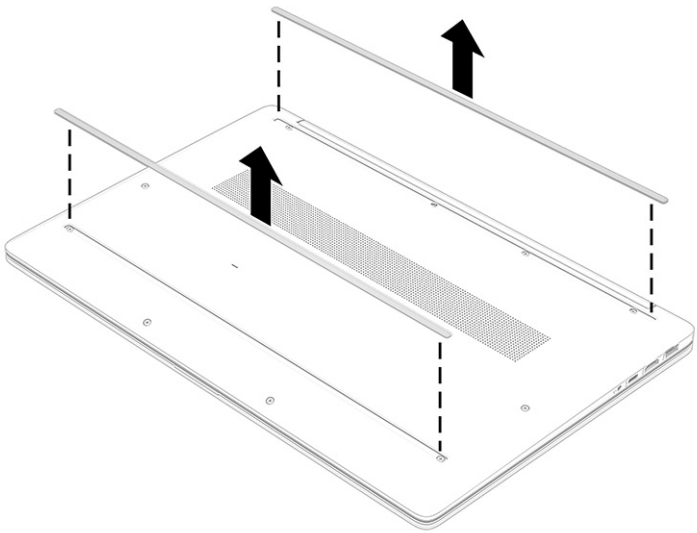

2. Remove the six Phillips 2.5 × 6.0 screws **(1)** from under the feet and the four Phillips 2.5 × 7.0 screws **(2)** that secure the bottom cover to the computer.

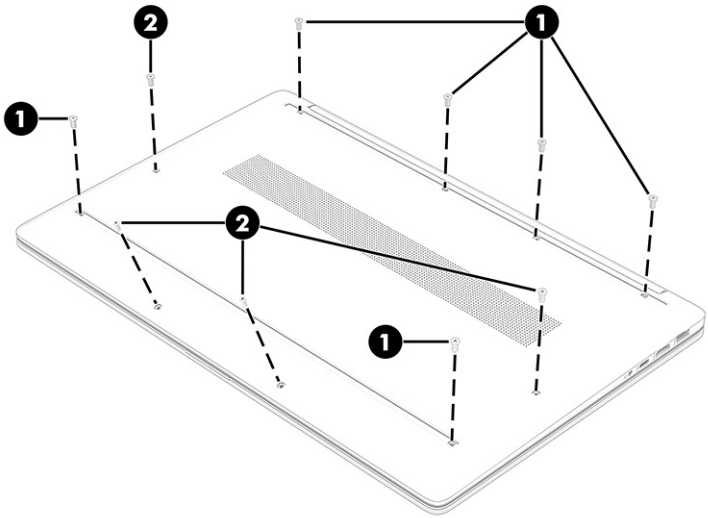

3. Starting near the bottom-left of the bottom cover, use a nonmarking, nonconductive tool to release the edges of the bottom cover from the computer.

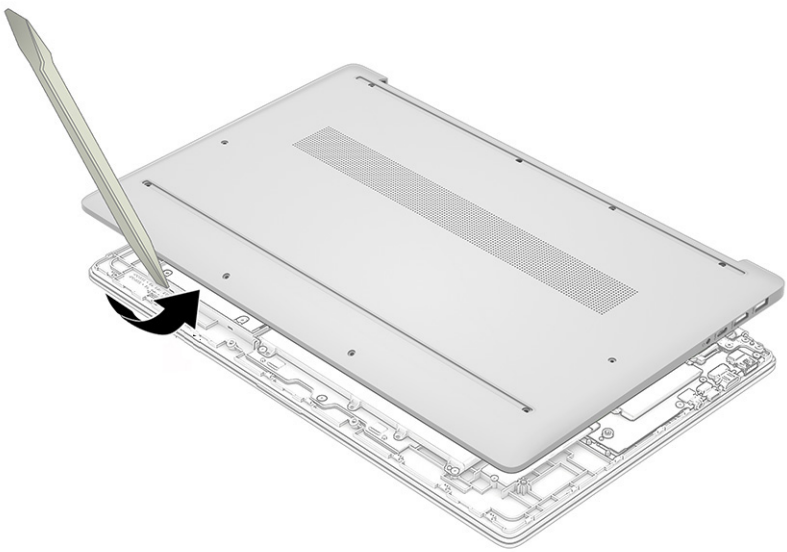

To replace the bottom cover, reverse the removal procedures.

When replacing the bottom cover, remove the Feature Byte label from the inside of the old bottom cover and place it on the inside of the new bottom cover. Be sure to keep this label with the computer, as the label is required for any future repairs.

You can locate product labels:

- Laser etched on the old bottom cover.

- In HP System Information by pressing fn + esc when you turn on the computer.

NOTE: Bottom cover appearance might vary.

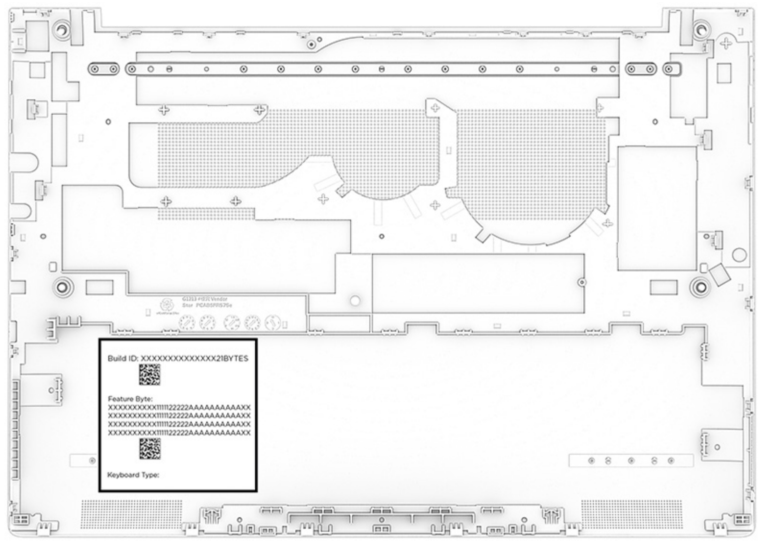

Hand write the product information onto the label of the new bottom cover. Use a ballpoint pen or marker to avoid smudging.

Example of label information

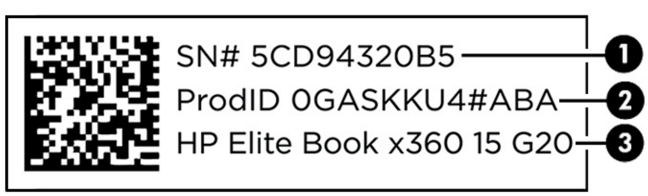

New bottom cover label location

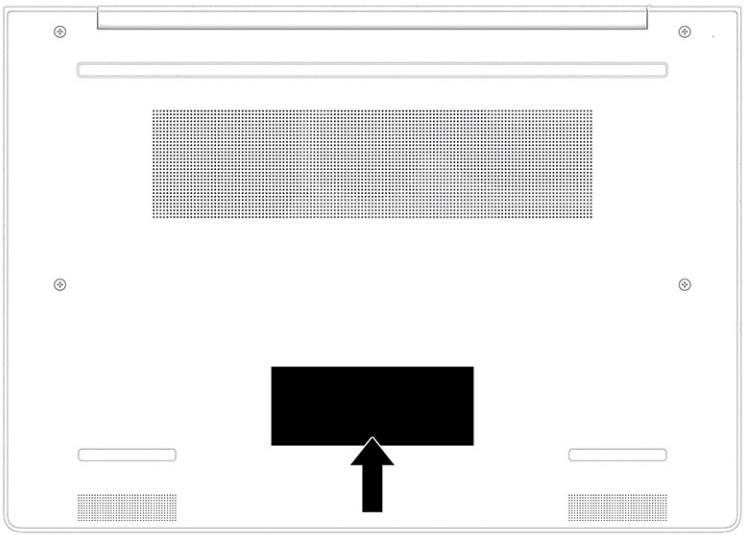

Memory modules

To remove the memory modules, use this procedure and illustration.

Table 6-2 **Memory module description and part number**

Description	Spare part number
8 GB	N77398-005

Before removing the memory, follow these steps:

1. Prepare the computer for disassembly (see Preparation for disassembly on page 33).
2. Remove the bottom cover (see Bottom cover and rubber feet on page 40).
3. Remove the battery (see Removing and reinstalling the same battery on page 34).

If you are replacing a memory module, remove the existing memory module:

- Spread the two retention clips **(1)** outward until the memory module tilts up at a 45° angle, and then remove the module **(2)**. Use the same procedure to remove all memory modules.

IMPORTANT: To prevent damage to the memory module, hold the memory module by the edges only. Do not touch the components on the memory module.

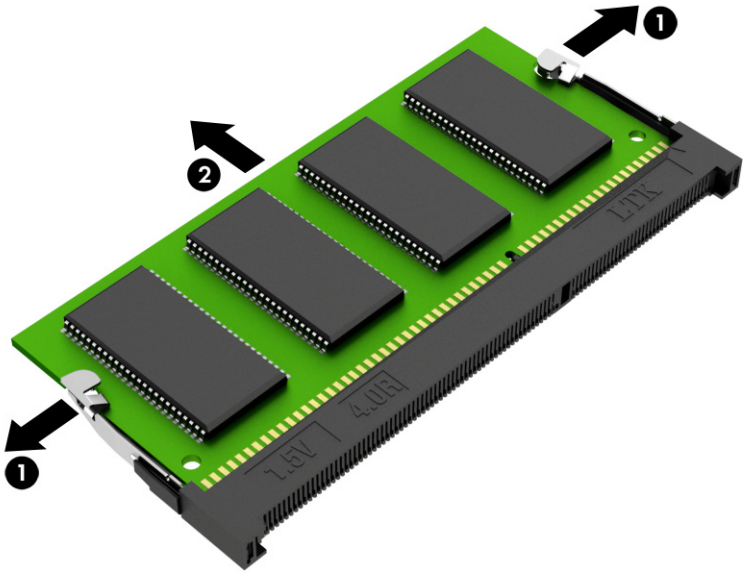

To protect a memory module after removal, place it in an electrostatic-safe container.

To install a memory module:

1. Align the notched edge of the module with the tab **(1)** in the slot, and then press the module **(2)** into the slot at an angle until it is seated.
2. Press down on the module **(3)** until the side retention clips snap into place.

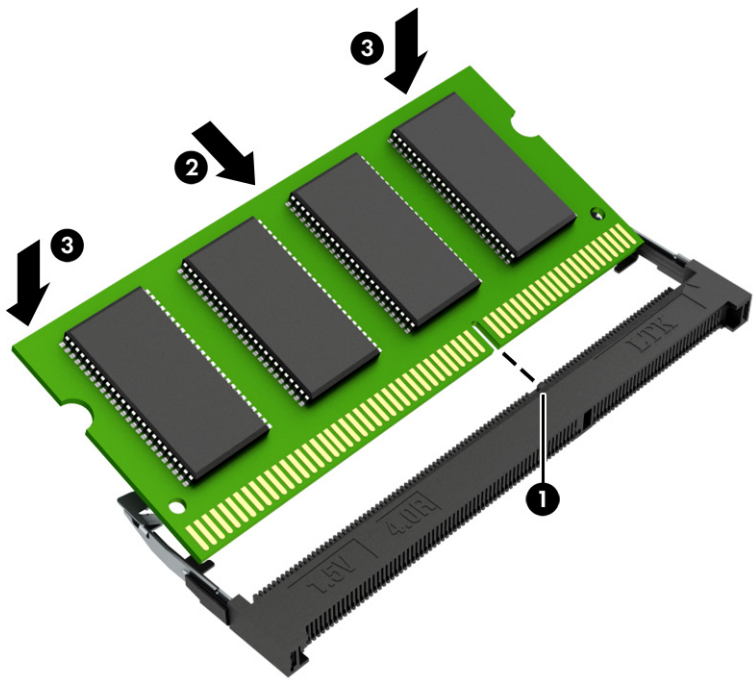

Solid-state drive

To remove the solid-state drive (SSD), use this procedure and illustration.

Table 6-3 **SSD descriptions and part numbers**

Description	Spare part number
1 TB	L85370-005
512 GB, PCIe-4 × 4	N45476-005
512 GB	L85364-005
256 GB, PCIe-4 × 4	N45477-005
256 GB	L85354-005

Before removing the SSD, follow these steps:

1. Prepare the computer for disassembly (see Preparation for disassembly on page 33).
2. Remove the bottom cover (see Bottom cover and rubber feet on page 40).
3. Remove the battery (see Removing and reinstalling the same battery on page 34).

Remove the SSD:

1. Remove the Phillips M2.0 × 2.5 screw **(1)** that secures the drive to the computer.
2. Pull the drive **(2)** away from the socket to remove it.

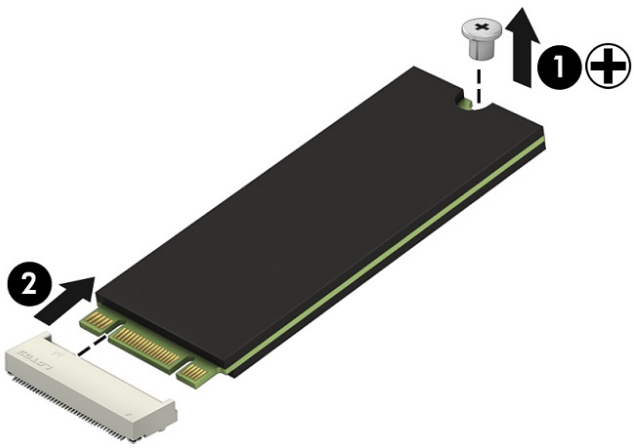

To install an SSD, reverse the removal procedures.

WLAN module

To remove the WLAN module, use this procedure and illustration.

Table 6-4 **WLAN module descriptions and part numbers**

Description	Spare part number
Realtek 8852BE-VT Wi-Fi 6 Bluetooth 5.4	P06350-005

Table 6-4 **WLAN module descriptions and part numbers (continued)**

Description	Spare part number
MediaTek MT7920 Wi-Fi 6 + Bluetooth 5.4	P17386-005

IMPORTANT: To prevent an unresponsive system, replace the wireless module only with a wireless module authorized for use in the computer by the governmental agency that regulates wireless devices in your country or region. If you replace the module and then receive a warning message, remove the module to restore device functionality, and then contact technical support.

Before removing the WLAN module, follow these steps:

1. Prepare the computer for disassembly (see Preparation for disassembly on page 33).
2. Remove the bottom cover (see Bottom cover and rubber feet on page 40).
3. Remove the battery (see Removing and reinstalling the same battery on page 34).

Remove the WLAN module:

1. Remove the tape **(1)** that covers the antenna connectors on the WLAN module.
2. Carefully disconnect the two antenna cables **(2)** from the module.
3. Remove the Phillips M2.0 × 2.5 screw **(3)**, and then remove the WLAN module **(4)**.

NOTE: Models have either one or two WLAN antennas. On models with two antennas, the #1 white WLAN antenna cable connects to the WLAN module #1 Main terminal. The #2 black WLAN antenna cable connects to the WLAN module #1 Aux terminal.

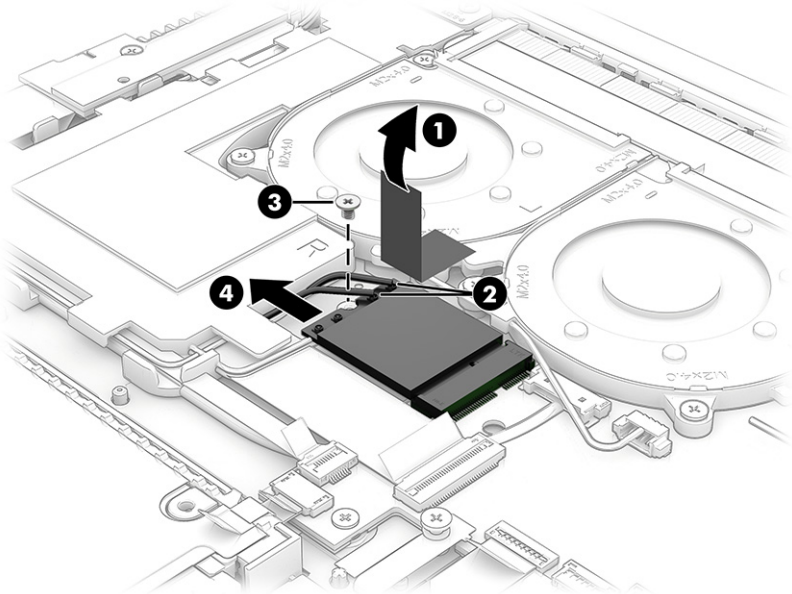

4. If the WLAN antenna is not connected to the terminal on the WLAN module, install a protective sleeve on the antenna connector, as shown in the following illustration.

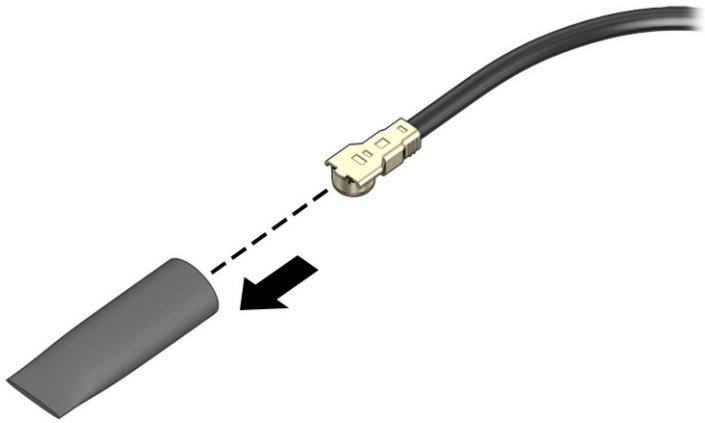

To install a WLAN module, reverse this procedure.

Fingerprint reader

To remove the fingerprint reader, use this procedure and illustration.

Table 6-5 **Fingerprint reader descriptions and part numbers**

Description	Spare part number
Fingerprint reader	M50419-001
Fingerprint reader cable	M50424-001

Before removing the fingerprint reader, follow these steps:

1. Prepare the computer for disassembly (see Preparation for disassembly on page 33).
2. Remove the bottom cover (see Bottom cover and rubber feet on page 40).
3. Remove the battery (see Removing and reinstalling the same battery on page 34).

Remove the fingerprint reader:

1. Remove the Phillips M2.0 × 3.0 screw **(1)** that secures the fingerprint reader bracket to the computer, and then remove the bracket **(2)**.
2. Disconnect the cable from the ZIF connector **(3)** on the fingerprint reader board.
3. Remove the fingerprint reader **(4)** from the computer.

NOTE: The fingerprint reader is secured with adhesive that is easy to damage during removal. Be sure to replace the adhesive when installing a fingerprint reader. The adhesive is available in the fingerprint reader spare part kit.

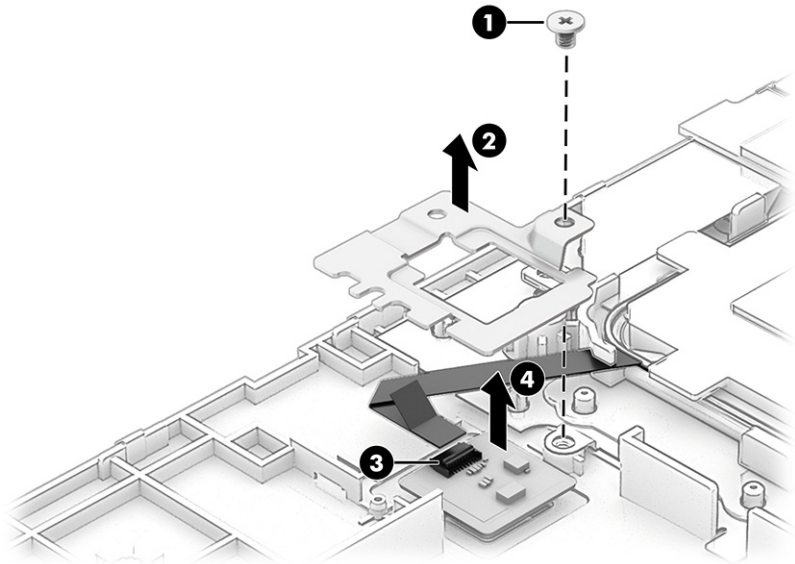

To install the fingerprint reader, reverse this procedure.

USB board

To remove the USB board, use this procedure and illustration.

Table 6-6 **USB board descriptions and part numbers**

Description	Spare part number
USB board	M50413-001
USB board cable	M50422-001

Before removing the USB board, follow these steps:

1. Prepare the computer for disassembly (see Preparation for disassembly on page 33).
2. Remove the bottom cover (see Bottom cover and rubber feet on page 40).
3. Remove the battery (see Removing and reinstalling the same battery on page 34).

Remove the USB board:

1. Remove the two Phillips M2.0 × 4.0 screws **(1)** that secure the USB board to the computer.
2. Lift the board **(2)** up and turn it over to access the cable connected to the bottom.
3. Disconnect the cable from the ZIF connector **(3)** on the bottom of the board.

NOTE: If you need to replace the USB board cable, you must remove the system board and speakers.

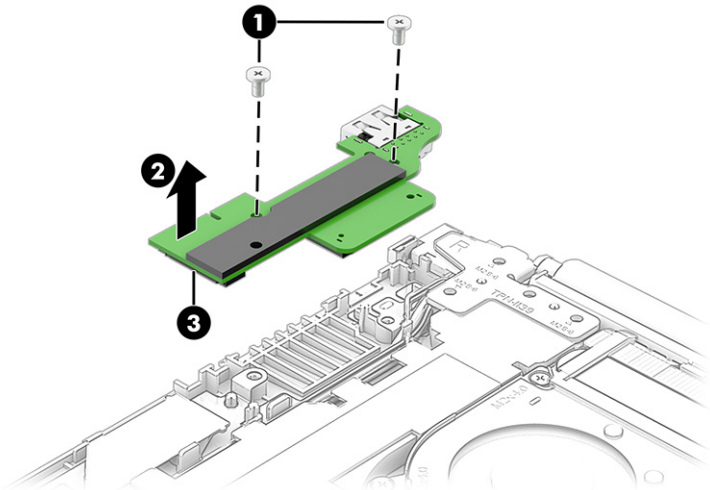

To install the USB board, reverse this procedure.

Touchpad

To remove the touchpad, use this procedure and illustration.

Table 6-7 **Touchpad descriptions and part numbers**

Description	Spare part number
Touchpad, jet black	M50414-001
Touchpad, natural silver	M50416-001
Touchpad cable	M50423-001

Before removing the touchpad, follow these steps:

1. Prepare the computer for disassembly (see Preparation for disassembly on page 33).
2. Remove the bottom cover (see Bottom cover and rubber feet on page 40).
3. Remove the battery (see Removing and reinstalling the same battery on page 34).

Remove the touchpad:

1. Remove the three Phillips M2.0.× 2.0 screws **(1)** that secure the touchpad bracket to the computer.

2. Remove the bracket **(2)** from the computer.

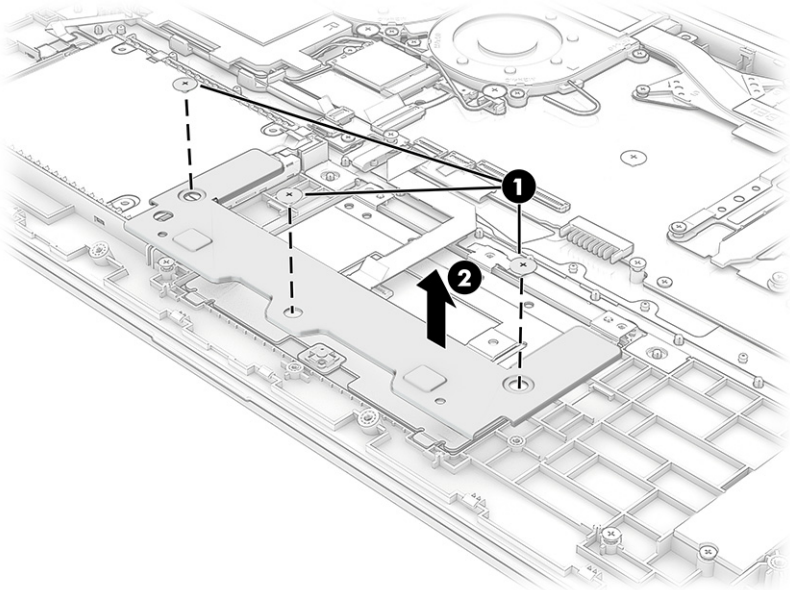

3. Disconnect the cable from the ZIF connector **(1)** on the touchpad module.
4. Remove the three Phillips M2.0 × 2.0 screws **(2)** that secure the touchpad to the computer.
5. Remove the touchpad **(3)** from the computer.

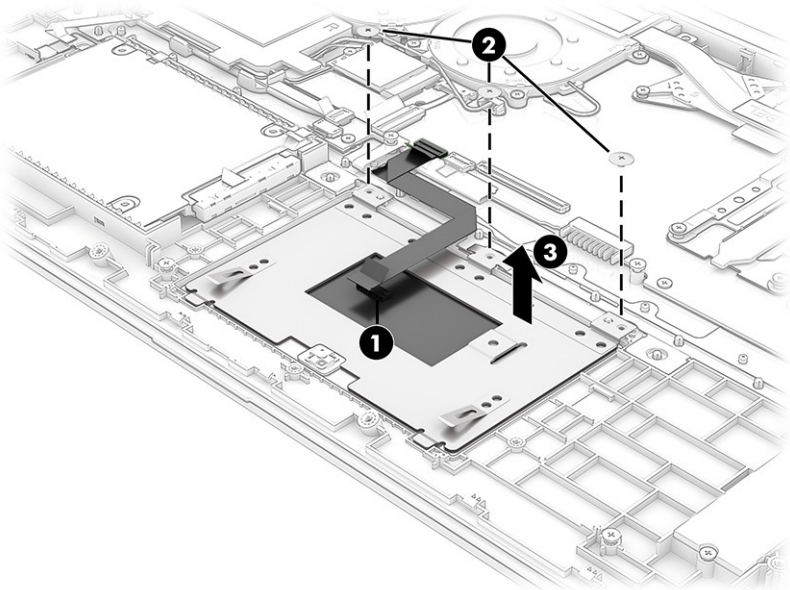

To install the touchpad, reverse this procedure.

Fan

To remove the fan, use this procedure and illustration.

Table 6-8 **Fan description and part number**

Description	Spare part number
Fan	M50402-001

Before removing the fan, follow these steps:

1. Prepare the computer for disassembly (see Preparation for disassembly on page 33).
2. Remove the bottom cover (see Bottom cover and rubber feet on page 40).
3. Remove the battery (see Removing and reinstalling the same battery on page 34).

Remove the fan:

1. Remove the three Phillips M2.0 × 4.0 screws **(1)** that secure the fan to the computer.
2. Disconnect the fan cable **(2)** from the system board, and then remove the fan **(3)** from the computer.

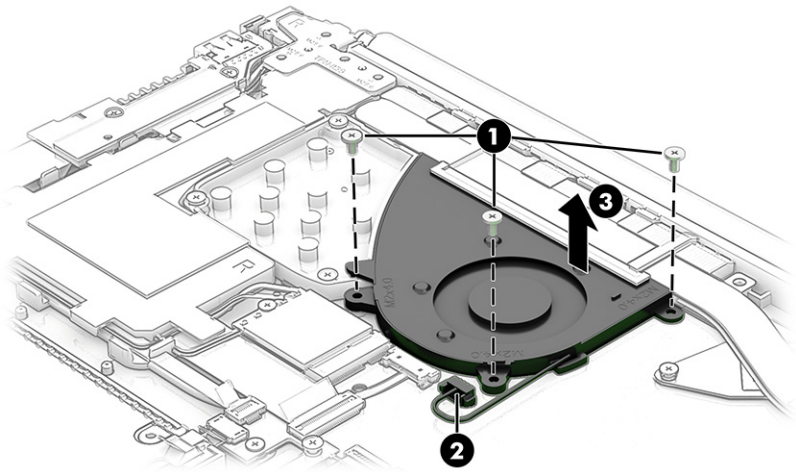

3. To remove the fan insert, remove the three Phillips M2.0 × 4.0 screws **(1)** that secure the insert to the computer, and then remove the insert **(2)** from the computer.

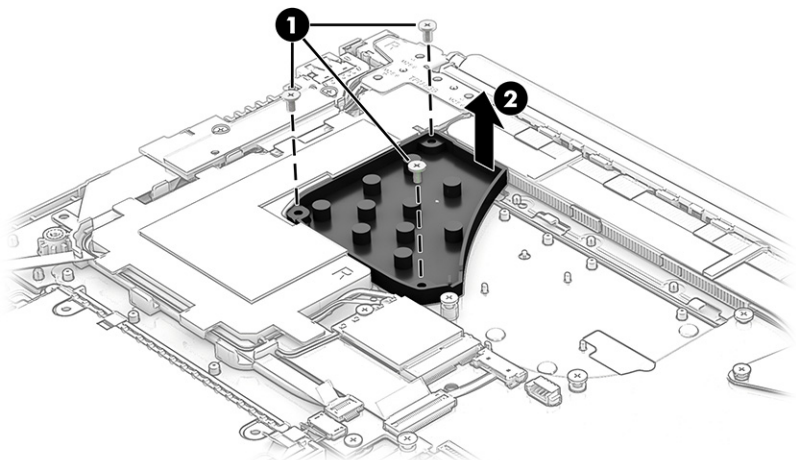

To install the fan or fan assembly, reverse these procedures.

Heat sink

To remove the heat sink, use these procedures and illustrations.

Table 6-9 **Heat sink description and part number**

Description	Spare part number
Heat sink	N24335-001

Before removing the heat sink, follow these steps:

1. Prepare the computer for disassembly (see Preparation for disassembly on page 33).
2. Remove the bottom cover (see Bottom cover and rubber feet on page 40).
3. Remove the battery (see Removing and reinstalling the same battery on page 34).

Remove the heat sink:

1. In the order indicated on the heat sink, remove the four Phillips M2.0 × 2.8 screws **(1)** that secure the heat sink to the computer.
2. Remove the heat sink **(2)** from the computer.

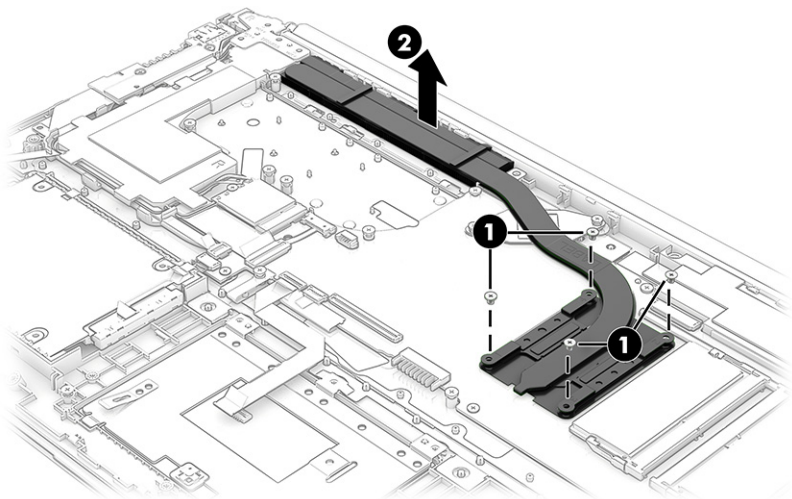

3. Thoroughly clean the thermal material from the surfaces of the heat sink and the system board components each time the heat sink is removed. Replacement thermal material is included with the heat sink and system board spare part kits. The following illustration shows the replacement thermal material locations.

   Thermal paste is used on the system board component **(1)** and on the heat sink area **(2)** that services it.

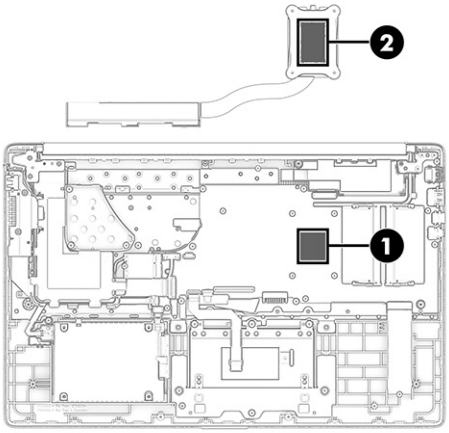

To install the heat sink, reverse this procedure.

System board

To remove the system board, use these procedures and illustrations.

Table 6-10 **System board descriptions and part numbers**

Description	Spare part number
System board (includes processor)	
Intel Core Ultra7 255U processor	P29834-601
Intel Core Ultra5 225U processor	P29833-601

Before removing the system board, follow these steps:

1. Prepare the computer for disassembly (see Preparation for disassembly on page 33).
2. Remove the bottom cover (see Bottom cover and rubber feet on page 40).
3. Remove the battery (see Removing and reinstalling the same battery on page 34).
4. Remove the solid-state drive (see Solid-state drive on page 45).
5. Remove the memory modules (see Memory module on page 44).
6. Remove the WLAN module (see WLAN module on page 46).
7. Remove the fan (see Fan on page 51).

NOTE: You do not have to remove the heat sink to remove the system board.

Remove the system board:

1. Disconnect the following cables from the system board:
   - Power connector cable **(1)**
   - Left fan cable **(2)**

- Display cable (ZIF) **(3)**
- Speaker cable **(4)**
- Keyboard cable (ZIF) **(5)**
- Backlight cable (ZIF) **(6)** (select products only)
- Touchpad board (ZIF) **(7)**
- Hard drive cable (ZIF) **(8)**
- Fingerprint reader cable (ZIF) **(9)** (select products only)
- USB board cable (ZIF) **(10)**

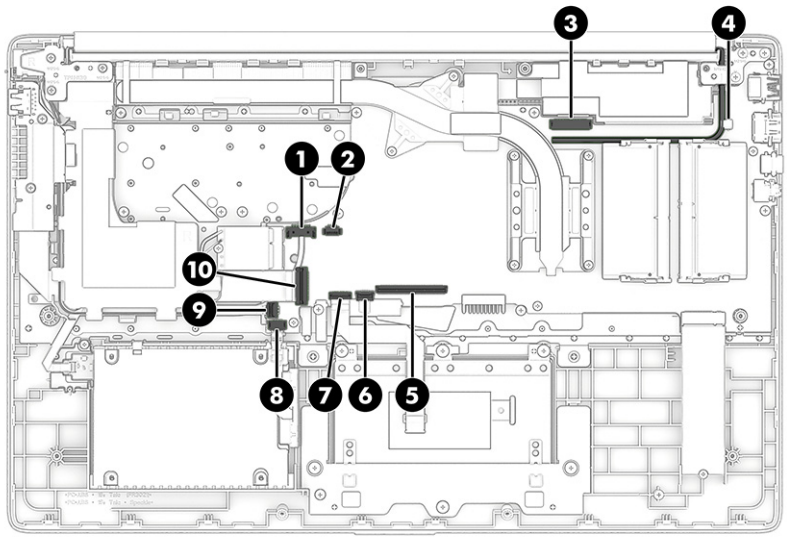

2. Remove the three Phillips M2.0 × 4.0 screws **(1)** and the three Phillips M2.0 × 2.5 screws **(2)** that secure the system board to the computer.

3. Lift the side of the system board **(3)** upward, and then pull the system board **(4)** away from the connectors on the side of the computer to remove it.

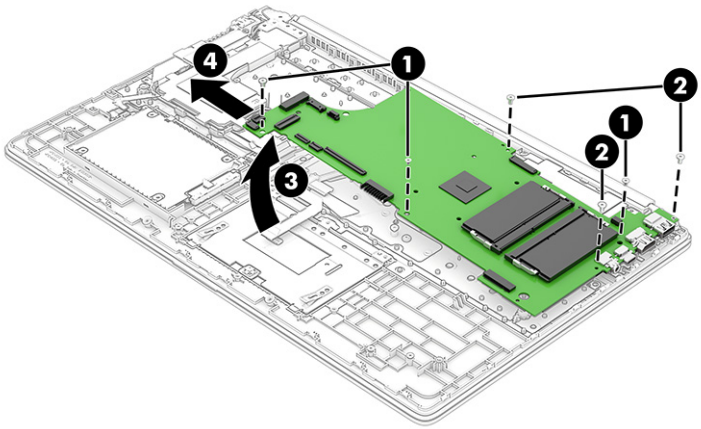

To install the system board, reverse this procedure.

Speakers

To remove the speakers, use this procedure and illustration.

Table 6-11 **Speaker description and part number**

Description	Spare part number
Speaker Kit	M50412-001

Before removing the speakers, follow these steps:

1. Prepare the computer for disassembly (see Preparation for disassembly on page 33).
2. Remove the bottom cover (see Bottom cover and rubber feet on page 40).
3. Remove the battery (see Removing and reinstalling the same battery on page 34).
4. Remove the solid-state drive (see Solid-state drive on page 45).
5. Remove the WLAN module (see WLAN module on page 46).
6. Remove the fan (see Fan on page 51).
7. Remove the system board with the heat sink installed (see System board on page 54).

Remove the speakers:

1. Lift the protective tape **(1)** that covers the cable between the speakers.
2. Use a tool to release both speakers **(2)**. The speakers are secured with adhesive.

3. Remove the speakers **(3)** from the computer.

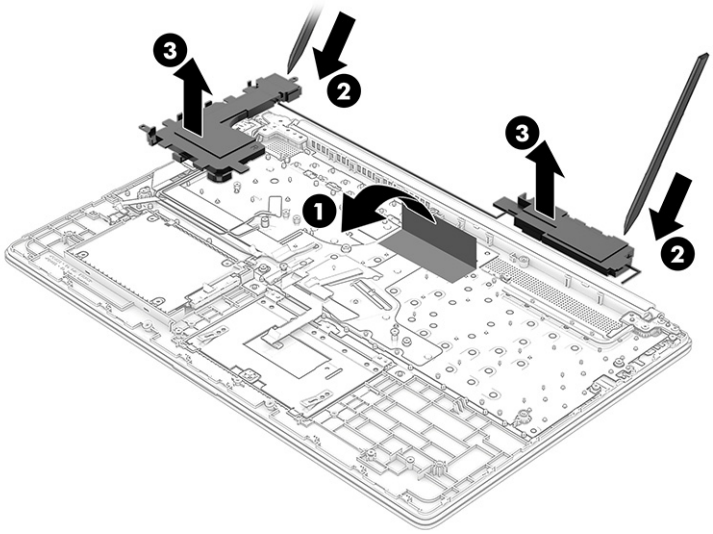

To install the speakers, reverse this procedure.

Display assembly

To remove and disassemble the display assembly, use these procedures and illustrations.

Full hinge-up displays are not available as spare parts. Spare parts for displays are available only at the subcomponent level.

Before removing the display panel, follow these steps:

1. Prepare the computer for disassembly (see Preparation for disassembly on page 33).
2. Remove the bottom cover (see Bottom cover and rubber feet on page 40).
3. Remove the battery (see Removing and reinstalling the same battery on page 34).

Remove the display assembly:

1. Disconnect the display cable from the system board ZIF connector **(1)**, and then remove the pieces of tape **(2)** that secure the display cable to the system board.

2. Disconnect the antenna cables **(3)** from the WLAN module, and then remove the cables from the clips **(4)** on the bottom and left sides of the speaker.

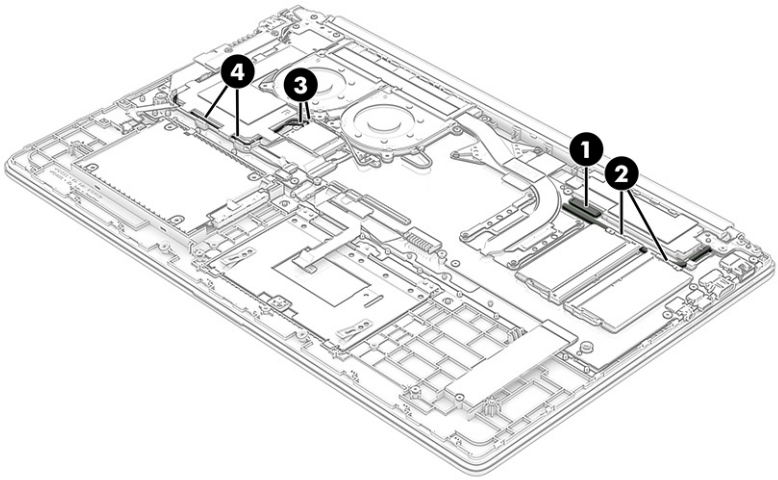

3. Open the display **(1)**.
4. Remove the six Phillips M2.5 × 6.0 screws **(2)** that secure the display assembly to the computer.
5. Separate the display assembly **(3)** from the computer.

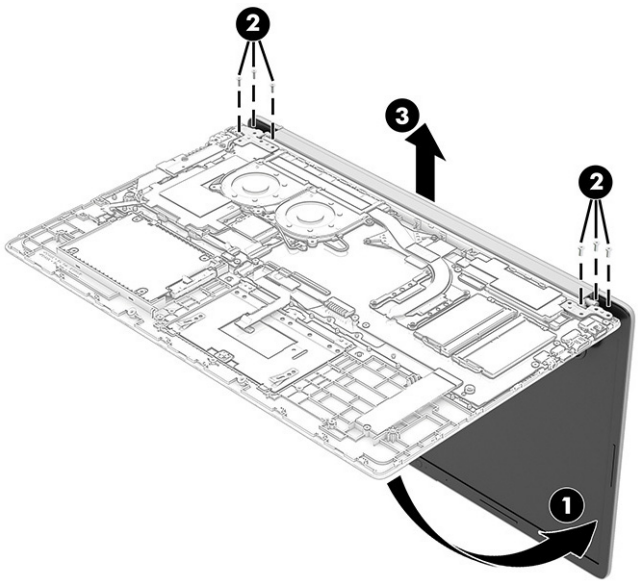

6. If you need to remove the hinge cover:
   - Squeeze the hinge cover **(1)**, and then remove it **(2)** from the display.

   The hinge cover is available as the following spare part numbers:

   N20564-001: Jet black

   N20566-001: Natural silver

   N20569-001: Pale rose gold

N39388-001: Midnight blue

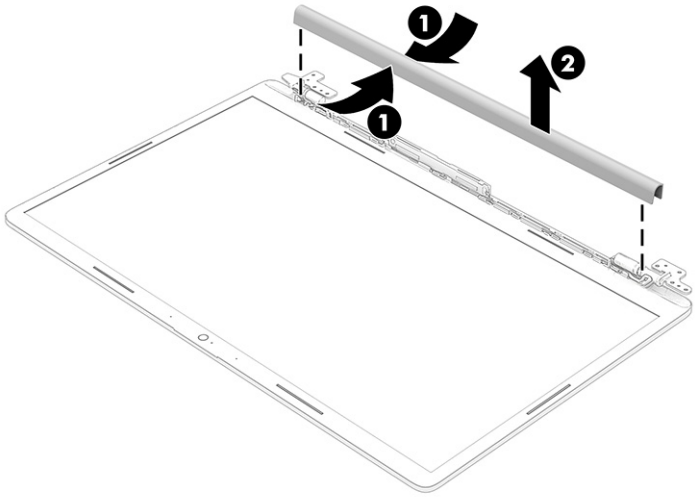

7. If you need to remove the bezel:

   a. Flex the top **(1)**, the left and right sides **(2)**, and then the bottom **(3)** of the bezel to release it.

   b. Remove the bezel **(4)** from the display. The bezel is secured with adhesive. Be sure to replace the adhesive when installing a bezel.

   The bezel is available as spare part number N39383-001.

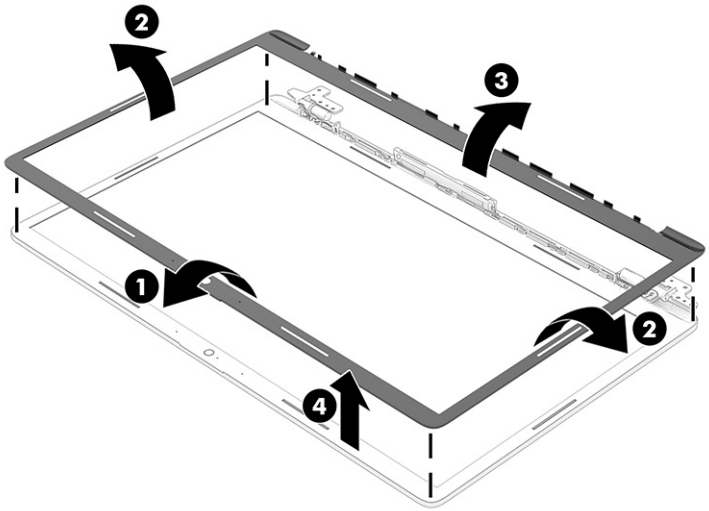

8. If you need to remove the camera module:

- Use a tool **(1)** to lift up evenly across the module and peel the module up from the display back cover, and then disconnect the cable **(2)** from the module.

  The camera module is available as spare part number N85873-001 for FHD models and N39387-001 for HD models.

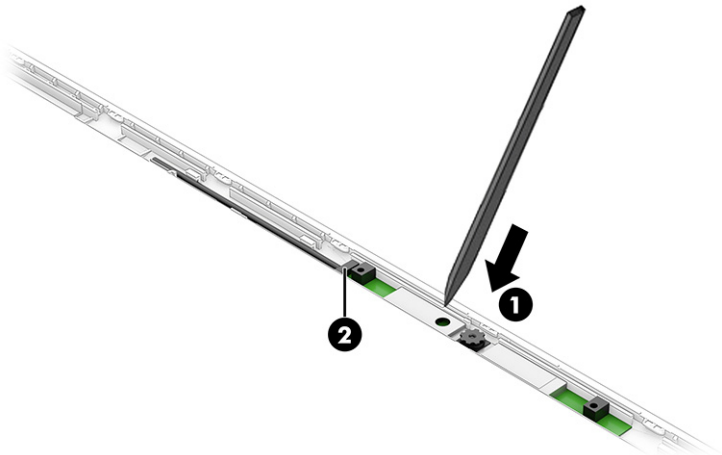

9. If you need to remove the display panel:

   a. The display panel is secured to the display enclosure with stretchable release tape that is installed under the left and right sides of the panel. To remove the panel, use tweezers to grasp the end of the tape **(1)**. While turning the tweezers, wrap the tape around the tweezers **(2)** as you continue to pull the tape **(3)** out from behind the display panel. You must pull the tape multiple times before it is completely removed.

   b. Lift the display panel **(4)** up and place it next to the display rear cover.

      Display panels are available as the following spare part numbers:

      N85872-001: FHD

      P25425-001: HD+, touch

      N39380-001: HD+, nontouch

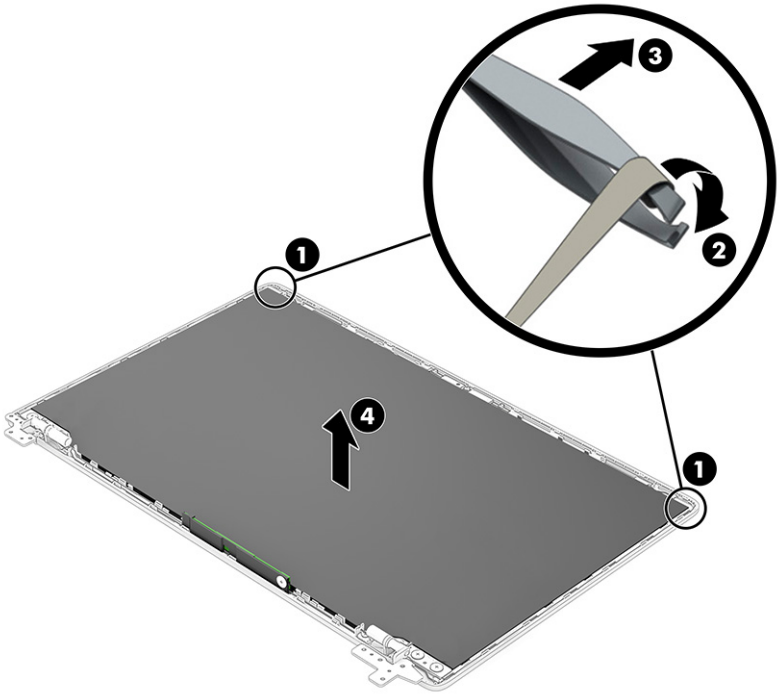

c. Lift the tape **(1)** from the connector on the display panel, rotate the locking lever **(2)**, and then disconnect the cable **(3)** from the panel.

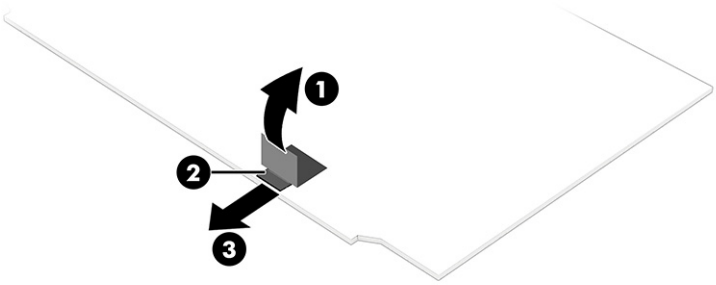

d. When installing a display panel, be sure to install the adhesive tape in the locations on the inside of the display back cover, as shown in the following illustration.

NOTE: Display panel adhesive is available as spare part number M50435-001.

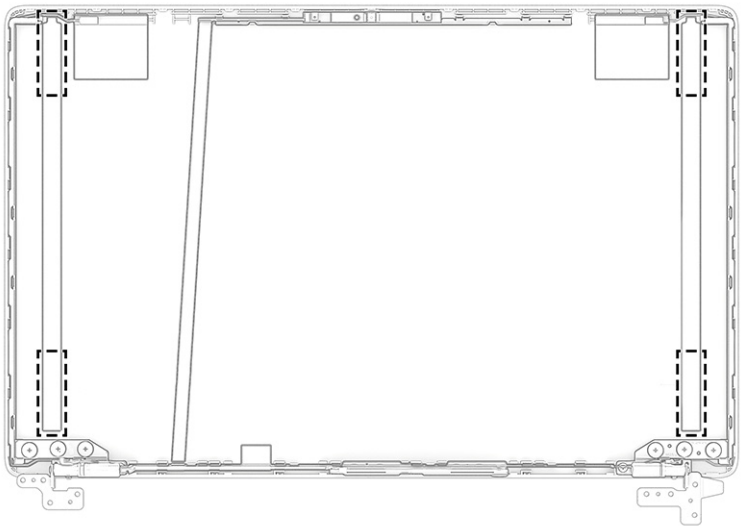

10. If you need to remove the hinges from the display rear cover:

    a. Remove the three Phillips M2.5 × 2.5 screws **(1)** from each hinge.

    b. Remove the Phillips M2.5 × 4.0 screw **(2)** from each hinge.

    c. Remove the hinges **(3)** from the display back cover.

    The hinges are available in the Hinge Kit as spare part number M50409-001.

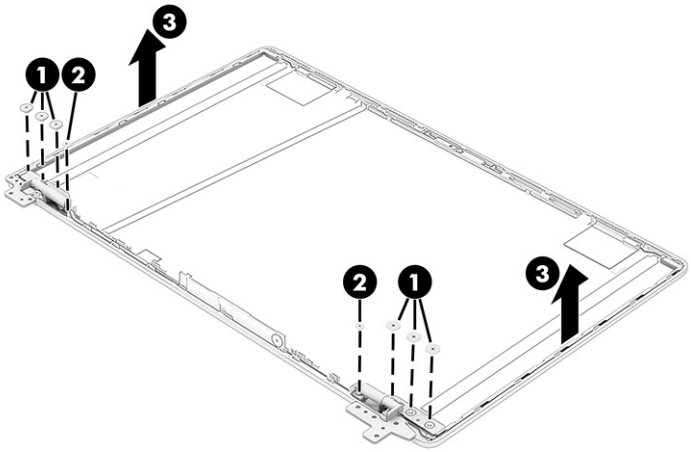

11. If you need to remove the display and camera cable, disconnect the cable from the camera module **(1)**, and then release the cable **(2)** from the display rear cover.

    The display and camera cable is available as the following spare part numbers:

    N39385-001: FHD

    N39386-001: HD, touch

    N39384-001: HD, nontouch

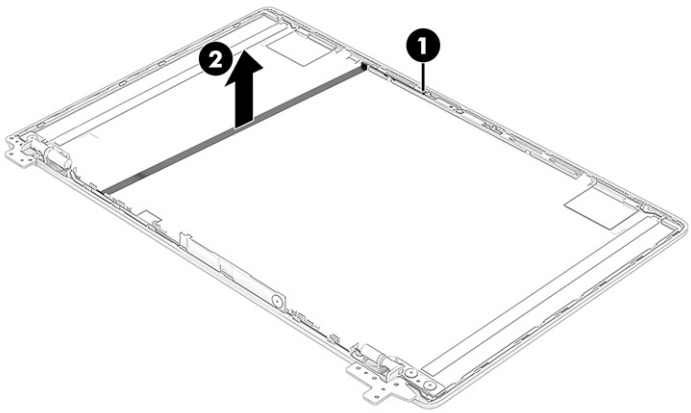

12. If you need to remove the WLAN antenna cables, remove the cables from the clips on the left **(1)** and right **(2)** sides of the display rear cover, and then peel the antennas **(3)** off the inside of the display rear cover. The wireless antennas and cables are available as spare part number M50375-001.

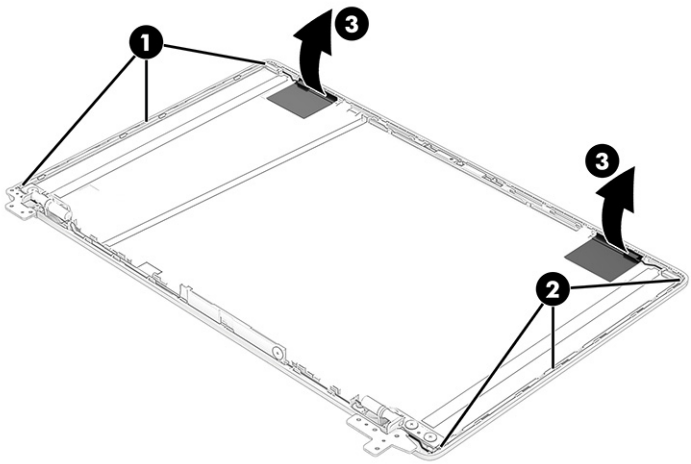

To reassemble and replace the display assembly, reverse this procedure.

Power connector cable

To remove the power connector cable, use this procedure and illustration.

Table 6-12 **Power connector cable description and part number**

Description	Spare part number
Power connector cable	M50400-001

Before removing the power connector cable, follow these steps:

1. Prepare the computer for disassembly (see Preparation for disassembly on page 33).
2. Remove the bottom cover (see Bottom cover and rubber feet on page 40).

3. Remove the battery (see Removing and reinstalling the same battery on page 34).

4. Remove the display (see Display assembly on page 57).

Remove the power connector cable:

1. Disconnect the power connector cable from the system board connector **(1)**.

2. Use a tool to release the power connector and cable **(2)** from the computer.

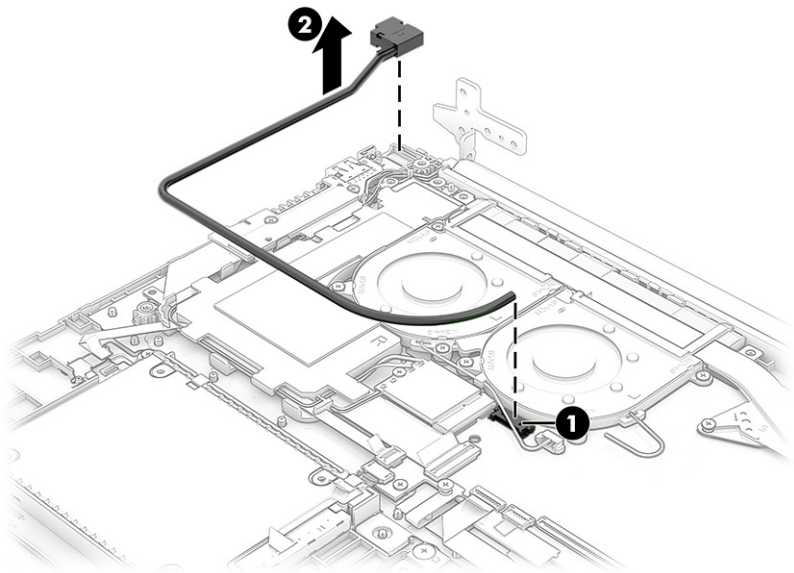

To install the power connector cable, reverse this procedure.

Top cover with keyboard

The top cover with keyboard remains after removing all other spare parts from the computer. In this section, the first table provides the main spare part number for the top cover with keyboard. The second table provides the country codes.

Table 6-13 Top cover with keyboard descriptions and part numbers

Description	Spare part number
Jet black, not backlit	M50468-xx1
Jet black,, not backlit, fingerprint reader	M50469-xx1
Jet black, not backlit, Copilot key	P27410-xx1
Jet black, not backlit, fingerprint reader, Copilot key	P27409-xx1
Natural silver, soft gray, not backlit	N39375-xx1
Natural silver, soft gray, backlit	N39376-xx1
Natural silver, soft gray, not backlit, fingerprint reader	N39377-xx1
Natural silver, soft gray, backlit, fingerprint reader	N39378-xx1
Natural silver, soft gray, not backlit, Copilot key	P27407-xx1
Natural silver, soft gray, backlit, Copilot key	P27408-xx1

Table 6-13 Top cover with keyboard descriptions and part numbers (continued)

Description	Spare part number
Natural silver, soft gray, not backlit, fingerprint reader, Copilot key	P27405-xx1
Natural silver, soft gray, backlit, fingerprint reader, Copilot key	P27406-xx1

Table 6-14 Spare part country codes

For use in country or region	Spare part number	For use in country or region	Spare part number	For use in country or region	Spare part number
Belgium	-A41	Hungary	-211	Saudi Arabia	-171
Brazil	-201	Iceland	-DD1	Slovenia	-BA1
Bulgaria	-261	India	-002	South Korea	-AD1
Chile	-161	Israel	-BB1	Spain	-071
Czech Republic/Slovakia	-FL1	Italy	-061	Switzerland	-BG1
Denmark	-081	Japan	-291	Taiwan	-AB1
Denmark, Finland, and Norway	-DH1	The Netherlands	-B31	Thailand	-281
French Canada	-DB1	Northern Africa	-FP1	Turkey	-141
Finland/Sweden	-B71	Norway	-091	Turkey-F	-541
France	-051	Portugal	-131	Ukraine	-BD1
Germany	-041	Romania	-271	United Kingdom	-031
Greece	-151	Russia	-251	United States	-001

7 Computer Setup (BIOS), TPM, and HP Sure Start

HP provides several tools to help set up and protect your computer.

Using Computer Setup

Computer Setup, or Basic Input/Output System (BIOS), controls communication between all the input and output devices on the system (such as hard drives, display, keyboard, mouse, and printer). Computer Setup includes settings for types of devices installed, the startup sequence of the computer, and amount of system and extended memory.

NOTE: Use extreme care when making changes in Computer Setup. Errors can prevent the computer from operating properly.

To start Computer Setup, turn on or restart the computer, and when the HP logo appears, press f10 to enter Computer Setup.

Navigating and selecting in Computer Setup

You can navigate and select in Computer Setup using one or more methods.

- To select a menu or a menu item, use the tab key and the keyboard arrow keys and then press enter, or use a pointing device to select the item.
- To scroll up and down, select the up arrow or the down arrow in the upper-right corner of the screen, or use the up arrow key or the down arrow key on the keyboard.
- To close open dialog boxes and return to the main Computer Setup screen, press esc, and then follow the on-screen instructions.

To exit Computer Setup, choose one of the following methods:

- To exit Computer Setup menus without saving your changes, select **Main**, select **Ignore Changes and Exit**, and then select **Yes**.

  NOTE: If you are using arrow keys to highlight your choice, you must then press enter.

- To save your changes and exit Computer Setup menus, select **Main**, select **Save Changes and Exit**, and then select **Yes**.

  NOTE: If you are using arrow keys to highlight your choice, you must then press enter.

Your changes go into effect when the computer restarts.

Restoring factory settings in Computer Setup

To return all settings in Computer Setup to the values that were set at the factory, follow these steps.

NOTE: Restoring defaults will not change the hard drive mode.

1. Start Computer Setup. See Using Computer Setup on page 66.
2. Select **Main**, select **Apply Factory Defaults and Exit**, and then select **Yes**.

NOTE: If you are using arrow keys to highlight your choice, you must then press enter.

NOTE: On select products, the selections might display **Restore Defaults** instead of **Apply Factory Defaults and Exit**.

Your changes go into effect when the computer restarts.

NOTE: Your password settings and security settings are not changed when you restore the factory settings.

Updating the BIOS

Updated versions of the BIOS might be available on the HP website. Most BIOS updates on the HP website are packaged in compressed files called *SoftPaqs*.

Some download packages contain a file named Readme.txt, which contains information regarding installing and troubleshooting the file.

Determining the BIOS version

To decide whether you need to update Computer Setup (BIOS), first determine the BIOS version on your computer.

If you are already in Windows, you can access BIOS version information (also known as *ROM date* and *System BIOS*) by pressing fn+esc (select products only). Or you can use Computer Setup.

1. Start Computer Setup. See Using Computer Setup on page 66.
2. Select **Main**, and then select **System Information**.
3. To exit Computer Setup menus without saving your changes, select **Main**, select **Ignore Changes and Exit**, and then select **Yes**.

NOTE: If you are using arrow keys to highlight your choice, you must then press enter.

To check for later BIOS versions, see Preparing for a BIOS update on page 67.

Preparing for a BIOS update

Be sure to follow all prerequisites before downloading and installing a BIOS update.

IMPORTANT: To reduce the risk of damage to the computer or an unsuccessful installation, download and install a BIOS update only when the computer is connected to the following types of reliable external power:

- The HP AC adapter provided with the computer (select products only)
- A replacement AC adapter provided by HP
- An AC adapter with the power rating specified on the product label

Do not download or install a BIOS update while the computer is operating under these circumstances:

- Running on battery power

- Docked in an optional docking device
- Connected to an optional docking power source

During the download and installation, follow these instructions:

- Do not disconnect power on the computer by unplugging the power cord from the AC outlet.
- Do not shut down the computer or initiate Sleep.
- Do not insert, remove, connect, or disconnect any device, cable, or cord.

Downloading a BIOS update

After you review the prerequisites, you can check for and download BIOS updates.

1. Perform one of these tasks:
   - Select the **Search** icon in the taskbar, type `support` in the search box, and then select the **HP Support Assistant** app.
   - Select the question mark icon (select products only) in the taskbar.
2. Select **Updates**, and then select **Check for updates and messages**.
3. Follow the on-screen instructions.
4. At the download area, follow these steps:
   a. Identify the most recent BIOS update and compare it to the BIOS version currently installed on your computer. Make a note of the date, name, or other identifier. You might need this information to locate the update later, after it has been downloaded to your hard drive.
   b. Follow the on-screen instructions to download your selection to the hard drive.

      Make a note of the path to the location on your hard drive where the BIOS update is downloaded. You will need to access this path when you are ready to install the update.

NOTE: If you connect your computer to a network, consult the network administrator before installing any software updates, especially system BIOS updates.

Installing a BIOS update

BIOS installation procedures vary. Follow any instructions that are displayed on the screen after the download is complete. If no instructions are displayed, follow these steps.

1. Select the **Search** icon in the taskbar, type `file` in the search box, and then select **File Explorer**.
2. Select your hard drive designation. The hard drive designation is typically Local Disk (C:).
3. Using the hard drive path you recorded earlier, open the folder that contains the update.
4. Double-click the file that has an .exe extension (for example, *filename*.exe).

   The BIOS installation begins.
5. Complete the installation by following the on-screen instructions.

NOTE: After a message on the screen reports a successful installation, you can delete the downloaded file from your hard drive.

Changing the boot order using the f9 prompt

To dynamically choose a boot device for the current startup sequence, follow these steps.

1. Access the Boot Device Options menu:
   - Turn on or restart the computer, and when the HP logo appears, press f9 to enter the Boot Device Options menu.
2. Select a boot device, press enter, and then follow the on-screen instructions.

TPM BIOS settings (select products only)

TPM provides additional security for your computer. You can modify the TPM settings in Computer Setup (BIOS).

IMPORTANT: Before enabling Trusted Platform Module (TPM) functionality on this system, you must ensure that your intended use of TPM complies with relevant local laws, regulations and policies, and approvals or licenses must be obtained if applicable. For any compliance issues arising from your operation or usage of TPM that violates the previously mentioned requirement, you shall bear all the liabilities wholly and solely. HP will not be responsible for any related liabilities.

NOTE: If you change the TPM setting to Hidden, TPM is not visible in the operating system.

To access TPM settings in Computer Setup:

1. Start Computer Setup. See Using Computer Setup on page 66.
2. Select **Security**, select **TPM Embedded Security**, and then follow the on-screen instructions.

Using HP Sure Start (select products only)

Select computer models are configured with HP Sure Start, a technology that monitors the computer's BIOS for attacks or corruption. If the BIOS becomes corrupted or is attacked, HP Sure Start automatically restores the BIOS to its previously safe state, without user intervention.

HP Sure Start is configured and already enabled so that most users can use the HP Sure Start default configuration. Advanced users can customize the default configuration.

To access the latest documentation on HP Sure Start, go to http://www.hp.com/support. Select **Find your product**, and then follow the on-screen instructions.

8 Backing up, restoring, and recovering

You can use Windows tools or HP software to back up your information, create a restore point, reset your computer, create recovery media, or restore your computer to its factory state. Performing these standard procedures can return your computer to a working state faster.

IMPORTANT: If you are performing recovery procedures on a tablet, the tablet battery must be at least 70% charged before you start the recovery process.

IMPORTANT: For a tablet with a detachable keyboard, connect the tablet to the keyboard base before beginning any recovery process.

Backing up information and creating recovery media

These methods of creating recovery media and backups are available on select products only.

Using Windows tools for backing up

HP recommends that you back up your information immediately after initial setup. You can do this task either using Windows Backup locally with an external USB flash drive or using online tools.

NOTE: If computer storage is 32 GB or less, Microsoft System Restore is disabled by default.

Using the HP Cloud Recovery Download Tool to create a recovery USB flash drive (select products only)

You can use the HP Cloud Recovery Download Tool to create an HP Recovery bootable USB flash drive.

For details:

- Go to http://www.hp.com, search for HP Cloud Recovery, and then select the result that matches the type of computer that you have and follow the on-screen instructions.

NOTE: In select countries, if you cannot create the HP Recovery USB flash drive yourself, contact support. Go to http://www.hp.com/support, select your country or region, and then follow the on-screen instructions.

IMPORTANT: HP recommends that you follow the Restoring and recovery methods on page 71 to restore your computer before you obtain and use the HP USB flash drive. Using a recent backup can return your machine to a working state sooner than using the HP USB flash drive. After the system is restored, reinstalling all the operating system software released since your initial purchase can be a lengthy process.

Restoring and recovering your system

You have several tools available to recover your system both within and outside of Windows if the desktop cannot load.

HP recommends that you attempt to restore your system using the Restoring and recovery methods on page 71.

Creating a system restore

System Restore is available in Windows. The System Restore software can automatically or manually create restore points, or snapshots, of the system files and settings on the computer at a particular point.

When you use System Restore, it returns your computer to its state at the time you made the restore point. Your personal files and documents should not be affected.

Restoring and recovery methods

After you run the first method, test to see whether the issue still exists before you proceed to the next method, which might now be unnecessary.

1. Run a Microsoft System Restore.
2. Run Reset this PC.

   NOTE: The options **Remove everything** and then **Fully clean the drive** can take several hours to complete and leave no information on your computer. It is the safest way to reset your computer before you recycle it.

3. Recover using the HP Recovery USB flash drive. For more information, see Recovering using the HP Recovery USB flash drive on page 71.

For more information about the first two methods, see the Get Help app:

- Select the **Start** button, select **All apps**, select the **Get Help** app, and then enter the task you want to perform.

NOTE: You must be connected to the internet to access the Get Help app.

Recovering using the HP Recovery USB flash drive

You can use the HP Recovery USB flash drive to recover the operating system and drivers that were installed at the factory. On select products, you can create recovery media on a bootable USB flash drive using the HP Cloud Recovery Download Tool.

For details, see Using the HP Cloud Recovery Download Tool to create a recovery USB flash drive (select products only) on page 70.

NOTE: In select countries, if you cannot create the HP Recovery USB flash drive yourself, contact support. Go to http://www.hp.com/support, select your country or region, and then follow the on-screen instructions.

To recover your system:

- Insert the HP Recovery USB flash drive, and then restart the computer.

NOTE: HP recommends that you follow the Restoring and recovery methods on page 71 to restore your computer before you obtain and use the HP USB flash drive. Using a recent backup can return your machine to a working state sooner than using the HP USB flash drive. After the system is restored, reinstalling all the operating system software released since your initial purchase can be a lengthy process.

Changing the computer boot order

If your computer does not restart using the HP Recovery USB flash drive, you can change the computer boot order, which is the order of devices listed in BIOS for startup information.

IMPORTANT: For a tablet with a detachable keyboard, connect the tablet to the keyboard base before beginning these steps.

To change the boot order:

1. Insert the HP Recovery USB flash drive.
2. Access the system **Startup** menu.
   - For computers or tablets with keyboards attached, turn on or restart the computer or tablet, quickly press esc, and then press f9 for boot options.
   - For tablets without keyboards, turn on or restart the tablet, and then quickly press and hold one of the following buttons:
     - Volume up
     - Volume down

     Then select **f9**.
3. Select the USB flash drive to boot from, and then follow the on-screen instructions.

Using HP Sure Recover (select products only)

Select computer models are configured with HP Sure Recover, a PC operating system (OS) recovery solution built into the hardware and software. HP Sure Recover can fully restore the HP OS image without installed recovery software.

Using HP Sure Recover, an administrator or user can restore the system and install:

- Latest version of the operating system
- Platform-specific device drivers
- Software applications, in the case of a custom image

To access the latest documentation for HP Sure Recover, go to http://www.hp.com/support. Follow the on-screen instructions to find your product and locate your documentation.

9 Using HP PC Hardware Diagnostics

You can use the HP PC Hardware Diagnostics utility to determine whether your computer hardware is running properly. The three versions are HP PC Hardware Diagnostics Windows, HP PC Hardware Diagnostics UEFI (Unified Extensible Firmware Interface), and (for select products only) Remote HP PC Hardware Diagnostics UEFI, a firmware feature.

Using HP PC Hardware Diagnostics Windows (select products only)

HP PC Hardware Diagnostics Windows is a Windows-based utility that allows you to run diagnostic tests to determine whether the computer hardware is functioning properly. The tool runs within the Windows operating system to diagnose hardware failures.

If HP PC Hardware Diagnostics Windows is not installed on your computer, you must download and install it. To download HP PC Hardware Diagnostics Windows, see Downloading HP PC Hardware Diagnostics Windows on page 74.

Using an HP PC Hardware Diagnostics Windows hardware failure ID code

When HP PC Hardware Diagnostics Windows detects a failure that requires hardware replacement, a 24-digit failure ID code is generated for select component tests. For interactive tests, such as keyboard, mouse, or audio and video palette, you must perform troubleshooting steps before you can receive a failure ID.

You have several options after you receive a failure ID:

- Select **Next** to open the Event Automation Service (EAS) page, where you can log the case.
- Scan the QR code with your mobile device, which takes you to the EAS page, where you can log the case.
- Select the box next to the 24-digit failure ID to copy your failure code and send it to support.

Accessing HP PC Hardware Diagnostics Windows

After HP PC Hardware Diagnostics Windows is installed, you can access it from HP Support Assistant or the Start menu.

Accessing HP PC Hardware Diagnostics Windows from HP Support Assistant

After HP PC Hardware Diagnostics Windows is installed, follow these steps to access it from HP Support Assistant:

1. Complete one of the following tasks:
   - Select the **Search** icon in the taskbar, type `support` in the search box, and then select the **HP Support Assistant** app.
   - Select the question mark icon in the taskbar.
2. Select **Fixes & Diagnostics**.

3. Select **Run hardware diagnostics**, and then select **Launch**.
4. When the tool opens, select the type of diagnostic test that you want to run, and then follow the on-screen instructions.

NOTE: To stop a diagnostic test, select **Cancel**.

Accessing HP PC Hardware Diagnostics Windows from the Start menu (select products only)

After HP PC Hardware Diagnostics Windows is installed, follow these steps to access it from the Start menu:

1. Select the **Start** button, and then select **All apps**.
2. Select **HP PC Hardware Diagnostics Windows**.
3. When the tool opens, select the type of diagnostic test that you want to run, and then follow the on-screen instructions.

NOTE: To stop a diagnostic test, select **Cancel**.

Downloading HP PC Hardware Diagnostics Windows

The HP PC Hardware Diagnostics Windows downloading instructions are provided in English only. You must use a Windows computer to download this tool because only .exe files are provided.

Downloading the latest HP PC Hardware Diagnostics Windows version from HP

To download HP PC Hardware Diagnostics Windows from HP, follow these steps:

1. Go to http://www.hp.com/go/techcenter/pcdiags. The HP PC Diagnostics home page is displayed.
2. Select **Diagnose PC Hardware issues in Windows**, scroll down to the expanded window that appears, and then select **Download**.
3. A pop-up that asks what you want to do with the file opens. Select **Open** or **Save As**. The latest version of the diagnostics tool opens or downloads to the selected location.

Downloading the HP PC Hardware Diagnostics Windows from the Microsoft Store

You can download the HP PC Hardware Diagnostics Windows from the Microsoft Store:

1. Select the Microsoft Store app on your desktop or select the **Search** icon in the taskbar, and then type `Microsoft Store` in the search box.
2. Type `HP PC Hardware Diagnostics Windows` in the **Microsoft Store** search box.
3. Follow the on-screen directions.

The tool downloads to the selected location.

Downloading HP Hardware Diagnostics Windows by product name or number (select products only)

You can download HP PC Hardware Diagnostics Windows by product name or number.

NOTE: For some products, you might have to download the software to a USB flash drive by using the product name or number.

1. Go to http://www.hp.com/support.
2. Select **Software and Drivers**, select your type of product, and then enter the product name or number in the search box that is displayed.
3. In the **Diagnostics** section, select **Download**, and then follow the on-screen instructions to select the specific Windows diagnostics version to be downloaded to your computer or USB flash drive.

The tool downloads to the selected location.

Installing HP PC Hardware Diagnostics Windows

To install HP PC Hardware Diagnostics Windows, navigate to the folder on your computer or the USB flash drive where the .exe file downloaded, double-click the .exe file, and then follow the on-screen instructions.

Using HP PC Hardware Diagnostics UEFI

HP PC Hardware Diagnostics Unified Extensible Firmware Interface (UEFI) allows you to run diagnostic tests to determine whether the computer hardware is functioning properly. The tool runs outside the operating system so that it can isolate hardware failures from issues that are caused by the operating system or other software components.

NOTE: For some products, you must use a Windows computer and a USB flash drive to download and create the HP UEFI support environment because only .exe files are provided. For more information, see Downloading HP PC Hardware Diagnostics UEFI to a USB flash drive on page 76.

If your PC does not start in Windows, you can use HP PC Hardware Diagnostics UEFI to diagnose hardware issues.

Using an HP PC Hardware Diagnostics UEFI hardware failure ID code

When HP PC Hardware Diagnostics UEFI detects a failure that requires hardware replacement, a 24-digit failure ID code is generated.

For assistance in solving the problem, complete one of these tasks:

- Select **Contact HP**, accept the HP privacy disclaimer, and then use a mobile device to scan the failure ID code that appears on the next screen. The HP Customer Support - Service Center page appears with your failure ID and product number automatically filled in. Follow the on-screen instructions.
- Contact support, and provide the failure ID code.

Starting HP PC Hardware Diagnostics UEFI

To start HP PC Hardware Diagnostics UEFI, follow this procedure.

1. Turn on or restart the computer, and quickly press esc.
2. Press f2.

   The BIOS searches three places for the diagnostic tools, in the following order:

   a. Connected USB flash drive

   NOTE: To download the HP PC Hardware Diagnostics UEFI tool to a USB flash drive, see Downloading the latest HP PC Hardware Diagnostics UEFI version on page 77.

   b. Hard drive

   c. BIOS

3. When the diagnostic tool opens, select the type of diagnostic test that you want to run, and then follow the on-screen instructions.

Starting HP PC Hardware Diagnostics UEFI through HP Hotkey Support software (select products only)

This section describes how to start HP PC Hardware Diagnostics UEFI through HP Hotkey Support software.

NOTE: You must disable fast boot to access HP PC Hardware Diagnostics UEFI from the HP System Information application.

To disable fast boot:

1. Turn on or restart the computer, and when the HP logo appears, press f10 to enter Computer Setup.
2. Select **Advanced**, and then select **Boot Options**.
3. Clear **Fast Boot**.
4. Select **Save Changes and Exit**, and then select **Yes**.

To start HP PC Hardware Diagnostics UEFI through HP Hotkey Support software, follow this procedure:

1. From the **Start** menu, open the HP System Information Application or press fn+esc.
2. In HP System Information screen, select **Run System Diagnostics**, select **Yes** to run the application, and then select **Restart**.

IMPORTANT: To prevent loss of data, save your work in all open apps before restarting your computer.

NOTE: When the restart is complete, the computer opens the HP PC Hardware Diagnostics UEFI Application. Proceed with the troubleshooting tests.

Downloading HP PC Hardware Diagnostics UEFI to a USB flash drive

Downloading HP PC Hardware Diagnostics UEFI to a USB flash drive can be useful in some situations.

- HP PC Hardware Diagnostics UEFI is not included in the preinstallation image.
- HP PC Hardware Diagnostics UEFI is not included in the HP Tool partition.

- The hard drive is damaged.

NOTE: The HP PC Hardware Diagnostics UEFI downloading instructions are provided in English only, and you must use a Windows computer to download and create the HP UEFI support environment because only `.exe` files are provided.

Downloading the latest HP PC Hardware Diagnostics UEFI version

To download the latest HP PC Hardware Diagnostics UEFI version to a USB flash drive, follow these steps:

1. Go to http://www.hp.com/go/techcenter/pcdiags. The HP PC Diagnostics home page is displayed.
2. Select **Diagnose PC Hardware Issues outside of the OS**, scroll down to the expanded window that appears, and then select **Download**.
3. A pop-up that asks what you want to do with the file opens. Select **Open** or **Save As**. The latest version of the diagnostics tool opens or downloads to the selected location.

Downloading HP PC Hardware Diagnostics UEFI by product name or number (select products only)

You can download HP PC Hardware Diagnostics UEFI by product name or number (select products only) to a USB flash drive.

NOTE: For some products, you might have to download the software to a USB flash drive by using the product name or number.

1. Go to http://www.hp.com/support.
2. Enter the product name or number, select your computer, and then select your operating system.
3. In the **Diagnostics** section, follow the on-screen instructions to select and download the specific UEFI Diagnostics version for your computer.

Using Remote HP PC Hardware Diagnostics UEFI settings (select products only)

Remote HP PC Hardware Diagnostics UEFI is a firmware (BIOS) feature that downloads HP PC Hardware Diagnostics UEFI to your computer. It can then run the diagnostics on your computer, and it might upload results to a preconfigured server.

For more information about Remote HP PC Hardware Diagnostics UEFI, go to http://www.hp.com/go/techcenter/pcdiags, select **Diagnose Other Potential Issues**, scroll down to **Remote PC Hardware Diagnostics UEFI**, and then select **Learn More**.

Downloading Remote HP PC Hardware Diagnostics UEFI

Remote HP PC Hardware Diagnostics UEFI is also available as a SoftPaq that you can download to a server.

Downloading the latest Remote HP PC Hardware Diagnostics UEFI version

You can download the latest Remote HP PC Hardware Diagnostics UEFI version to a USB flash drive.

1. Go to http://www.hp.com/go/techcenter/pcdiags. The HP PC Diagnostics home page is displayed.

2. Select **Diagnose PC Hardware Issues outside of the OS**, scroll down to the expanded window that appears, and then select **Download**.

3. A pop-up that asks what you want to do with the file opens. Select **Open** or **Save As**. The latest version of the diagnostics tool opens or downloads to the selected location.

Downloading Remote HP PC Hardware Diagnostics UEFI by product name or number

You can download Remote HP PC Hardware Diagnostics UEFI by product name or number.

NOTE: For some products, you might have to download the software by using the product name or number.

1. Go to http://www.hp.com/support.

2. Select **Software and Drivers**, select your type of product, enter the product name or number in the search box that is displayed, select your computer, and then select your operating system.

3. In the **Diagnostics** section, follow the on-screen instructions to select and download the **Remote UEFI** version for the product.

Customizing Remote HP PC Hardware Diagnostics UEFI settings

Using the Remote HP PC Hardware Diagnostics setting in Computer Setup (BIOS), you can perform several customizations.

- Set a schedule for running diagnostics unattended. You can also start diagnostics immediately in interactive mode by selecting **Execute Remote HP PC Hardware Diagnostics UEFI**.
- Set the location for downloading the diagnostic tools. This feature provides access to the tools from the HP website or from a server that has been preconfigured for use. Your computer does not require the traditional local storage, such as a hard drive or USB flash drive, to run remote diagnostics.
- Set a location for storing the test results. You can also set the user name and password that you use for uploads.
- Display status information about the diagnostics run previously.

To customize Remote HP PC Hardware Diagnostics UEFI settings, follow these steps:

1. Turn on or restart the computer, and when the HP logo appears, press f10 to enter Computer Setup.

2. Select **Advanced**, and then select **Settings**.

3. Make your customization selections.

4. Select **Main**, then select **Save Changes and Exit** to save your settings.

Your changes take effect when the computer restarts.

10 Specifications

This chapter provides specifications for your computer system.

Computer specifications

This section provides specifications for your computer. When traveling with your computer, the computer dimensions and weights, as well as input power ratings and operating specifications, provide helpful information.

Table 10-1 **Computer specifications**

	Metric	U.S.
Dimensions		
Width	**400.7 mm**	15.8 in
Depth	**257.9 mm**	10.2 in
Height	**19.9 mm**	0.78 in
Weight (lowest configuration)	**2.08 kg**	4.58 lbs
Input power		
Operating voltage and current	19.5 V DC @ 2.31 A - 45 W 19.5 V DC @ 3.33 A - 65 W	
Temperature		
Operating	**5°C to 35°C**	41°F to 95°F
Nonoperating	**-20°C to 60°C**	-4°F to 140°F
Relative humidity (noncondensing)		
Operating	10% to 90%	
Nonoperating	5% to 95%	
Maximum altitude (unpressurized)		
Operating	**-15 m to 3,048 m**	-50 ft to 10,000 ft
Nonoperating	**-15 m to 12,192 m**	-50 ft to 40,000 ft

NOTE: Applicable product safety standards specify thermal limits for plastic surfaces. The device operates well within this range of temperatures.

Display specifications

This section provides specifications for your display.

Table 10-2 **Display specifications**

	Metric	U.S.
Active diagonal size	**43.9 cm**	17.3 in
Resolution	1920 × 1080 (FHD) 1600 × 900 (HD+)	
Surface treatment	Antiglare BrightView	
Brightness	250 nits	
Viewing angle	UWVA (FHD panels) SVA (HD+ panels)	
Backlight	LED	
Display panel interface	eDP	

Solid-state drive specifications

This section provides specifications for your solid-state drives.

Table 10-3 **Solid-state drive specifications**

	256 GB*	512 GB*	1 TB*
Dimensions			
Height	1.0 mm	1.0 mm	1.0 mm
Length	50.8 mm	50.8 mm	50.8 mm
Width	28.9 mm	28.9 mm	28.9 mm
Weight	< 10 g	< 10 g	< 10 g
Interface type	PCIe	PCIe	PCIe
Ready time, maximum (to not busy)	1.0 ms	< 1.0 ms	1.0 ms
Access times, logical	0.1 ms	0.1 ms	0.1 ms
Transfer rate			
Sequential read	up to 2150 MBps	up to 2150 MBps	up to 2150 MBps
Random read	Up to 300,000 IOPs	Up to 300,000 IOPs	Up to 300,000 IOPs
Sequential write	up to 1550 MBps	up to 1550 MBps	up to 1550 MBps
Random write	Up to 100,000 IOPs	Up to 100,000 IOPs	Up to 100,000 IOPs
Total logical sectors	468,883,296	1,000,215,216	1,500,336,388
Operating temperature	**0°C to 70°C** (32°F to 158°F)	**0°C to 70°C** (32°F to 158°F)	**0°C to 70°C** (32°F to 158°F)

*1 GB = 1 billion bytes when referring to hard drive storage capacity. Actual accessible capacity is less. Actual drive specifications might differ slightly.

NOTE: Certain restrictions and exclusions apply. Contact support for details.

11 Power cord set requirements

This chapter provides power cord requirements for countries and regions.

The wide-range input feature of the computer permits it to operate from any line voltage from 100 V AC to 120 V AC, or from 220 V AC to 240 V AC.

The three-conductor power cord set included with the computer meets the requirements for use in the country or region where the equipment is purchased.

Power cord sets for use in other countries or regions must meet the requirements of the country and region where the computer is used.

Requirements for all countries

These power cord requirements are applicable to all countries and regions.

- The length of the power cord set must be at least **1.0 m** (3.3 ft) and no more than **2.0 m** (6.5 ft).
- All power cord sets must be approved by an acceptable accredited agency responsible for evaluation in the country or region where the power cord set will be used.
- The power cord sets must have a minimum current capacity of 10 A and a nominal voltage rating of 125 V AC or 250 V AC, as required by the power system of each country or region.
- The appliance coupler must meet the mechanical configuration of an EN 60 320/IEC 320 Standard Sheet C13 connector for mating with the appliance inlet on the back of the computer.

Requirements for specific countries and regions

To determine power cord requirements for specific countries and regions, use this table.

Table 11-1 **Power cord requirements for specific countries and regions**

Country/region	Accredited agency	Applicable note number
Argentina	IRAM	1
Australia	SAA	1
Austria	OVE	1
Belgium	CEBEC	1
Brazil	ABNT	1
Canada	CSA	2
Chile	IMQ	1
Denmark	DEMKO	1
Finland	FIMKO	1
France	UTE	1

Table 11-1 Power cord requirements for specific countries and regions (continued)

Country/region	Accredited agency	Applicable note number
Germany	VDE	1
India	BIS	1
Israel	SII	1
Italy	IMQ	1
Japan	JIS	3
Netherlands	KEMA	1
New Zealand	SANZ	1
Norway	NEMKO	1
The People's Republic of China	CCC	4
Saudi Arabia	SASO	7
Singapore	PSB	1
South Africa	SABS	1
South Korea	KTL	5
Sweden	SEMKO	1
Switzerland	SEV	1
Taiwan	BSMI	6
Thailand	TISI	1
United Kingdom	ASTA	1
United States	UL	2

1. The flexible cord must be Type HO5VV-F, three-conductor, 0.75 mm^2 conductor size. Power cord set fittings (appliance coupler and wall plug) must bear the certification mark of the agency responsible for evaluation in the country or region where it will be used.
2. The flexible cord must be Type SVT/SJT or equivalent, No. 18 AWG, three-conductor. The wall plug must be a two-pole grounding type with a NEMA 5-15P (15 A, 125 V AC) or NEMA 6-15P (15 A, 250 V AC) configuration. CSA or C-UL mark. UL file number must be on each element.
3. The appliance coupler, flexible cord, and wall plug must bear a T mark and registration number in accordance with the Japanese Dentori Law. The flexible cord must be Type VCTF, three-conductor, 0.75 mm^2 or 1.25 mm^2 conductor size. The wall plug must be a two-pole grounding type with a Japanese Industrial Standard C8303 (7 A, 125 V AC) configuration.
4. The flexible cord must be Type RVV, three-conductor, 0.75 mm^2 conductor size. Power cord set fittings (appliance coupler and wall plug) must bear the CCC certification mark.
5. The flexible cord must be Type H05VV-F three-conductor, 0.75 mm^2 conductor size. KTL logo and individual approval number must be on each element. Approval number and logo must be printed on a flag label.
6. The flexible cord must be Type HVCTF three-conductor, 1.25 mm^2 conductor size. Power cord set fittings (appliance coupler, cable, and wall plug) must bear the BSMI certification mark.

7. For 127 V AC, the flexible cord must be Type SVT or SJT 3-conductor, 18 AWG, with plug NEMA 5-15P (15 A, 125 V AC), with UL and CSA or C-UL marks. For 240 V AC, the flexible cord must be Type H05VV-F three-conductor, 0.75 mm^2 or 1.00 mm^2 conductor size, with plug BS 1363/A with BSI or ASTA marks.

12 Statement of memory volatility

For general information regarding nonvolatile memory in HP business computers, and to restore nonvolatile memory that can contain personal data after the system has been turned off and the hard drive has been removed, use these instructions.

HP business computer products that use Intel®-based or AMD®-based system boards contain volatile DDR memory. The amount of nonvolatile memory present in the system depends upon the system configuration. Intel-based and AMD-based system boards contain nonvolatile memory subcomponents as originally shipped from HP, with the following assumptions:

- No subsequent modifications were made to the system.
- No applications, features, or functionality were added to or installed on the system.

Following system shutdown and removal of all power sources from an HP business computer system, personal data can remain on volatile system memory (DIMMs) for a finite period of time and also remains in nonvolatile memory. Use the following steps to remove personal data from the computer, including the nonvolatile memory found in Intel-based and AMD-based system boards.

NOTE: If your tablet has a keyboard base, connect to the keyboard base before beginning steps in this chapter.

Current BIOS steps

Use these instructions to restore nonvolatile memory.

1. Follow these steps to restore the nonvolatile memory that can contain personal data. Restoring or reprogramming nonvolatile memory that does not store personal data is neither necessary nor recommended.

   a. Turn on or restart the computer, and then quickly press esc.

   NOTE: If the system has a BIOS administrator password, type the password at the prompt.

   b. Select **Main**, select **Apply Factory Defaults and Exit**, and then select **Yes** to load defaults. The computer restarts.

   c. During the restart, press esc while the "Press the ESC key for Startup Menu" message is displayed at the bottom of the screen.

   NOTE: If the system has a BIOS administrator password, type the password at the prompt.

   d. Select the **Security** menu, select **Restore Security Settings to Factory Defaults**, and then select **Yes** to restore security level defaults. The computer restarts.

   e. During the restart, press esc while the "Press the ESC key for Startup Menu" message is displayed at the bottom of the screen.

   NOTE: If the system has a BIOS administrator password, type the password at the prompt.

f. If an asset or ownership tag is set, select the **Security** menu and scroll down to the **Utilities** menu. Select **System IDs**, and then select **Asset Tracking Number**. Clear the tag, and then make the selection to return to the prior menu.

g. If a DriveLock password is set, select the **Security** menu, and scroll down to **Hard Drive Utilities** under the **Utilities** menu. Select **Hard Drive Utilities**, select **DriveLock**, and then clear the check box for **DriveLock password on restart**. Select **OK** to proceed.

h. Select the **Main** menu, and then select **Reset BIOS Security to factory default**. Select **Yes** at the warning message. The computer restarts.

i. During the restart, press esc while the "Press the ESC key for Startup Menu" message is displayed at the bottom of the screen.

NOTE: If the system has a BIOS administrator password, type the password at the prompt.

j. Select the **Main** menu, select **Apply Factory Defaults and Exit**, select **Yes** to save changes and exit, and then select **Shutdown**.

k. Restart the system. If the system has a Trusted Platform Module (TPM), fingerprint reader, or both, one or two prompts will appear—one to clear the TPM and the other to Reset Fingerprint Sensor. Press or tap f1 to accept or f2 to reject.

l. Remove all power and system batteries for at least 24 hours.

2. Complete one of the following tasks:

- Remove and retain the storage drive.
- Clear the drive contents by using a third-party utility designed to erase data from an SSD.
- Clear the contents of the drive by using the following BIOS Setup Secure Erase command option steps:

NOTE: If you clear data using Secure Erase, you cannot recover it.

a. Turn on or restart the computer, and then quickly press esc.

b. Select the **Security** menu and scroll down to the esc menu.

c. Select **Hard Drive Utilities**.

d. Finish by completing one of these tasks:

- Under **Utilities**, select **Secure Erase**, select the hard drive storing the data you want to clear, and then follow the on-screen instructions to continue.
- Clear the contents of the drive using the following Disk Sanitizer commands steps:

i. Turn on or restart the computer, and then quickly press esc.

ii. Select the **Security** menu and scroll down to the **Utilities** menu.

iii. Select **Hard Drive Utilities**.

iv. Under **Utilities**, select **Disk Sanitizer**, select the hard drive with the data that you want to clear, and then follow the on-screen instructions to continue.

NOTE: The amount of time it takes for Disk Sanitizer to run can take several hours. Plug the computer into an AC outlet before starting.

Nonvolatile memory usage

Use this table to troubleshoot nonvolatile memory usage.

Table 12-1 **Troubleshooting information for nonvolatile memory usage**

Description	Volatility description	Storage user data	How to erase
Primary storage device, holds the OS, applications, and application settings	Nonvolatile, 8-256 GB of eMMC or NVMe SSD storage, removable	Yes[1]	Follow instructions below under "Erase the Primary Storage Device."
System memory (RAM), holds transient data during system operation	Volatile, SODIMM socket. Removable (4 GB/8 GB/16 GB)	Yes	Unplug unit from power.
Permanent system BIOS settings	Nonvolatile; 16 KB; stored	No[2]	Follow instructions below under "Clearing BIOS Settings."
System boot ROM (BIOS)	Nonvolatile memory, 128 Mbit (16 MB) socketed, removable	No	Download the latest BIOS for your model from the HP website and follow the instructions to flash the BIOS that are on the website.
RTC (CMOS) RAM	Volatile memory, 256 bytes located in AMD embedded System on Chip (SoC)	No	**Desktop computers with a CMOS button:** Unplug unit from main power, remove top cover and press the **Clear CMOS** button. **Notebook and desktop computers without a CMOS button:** 1. Press and hold power button for 12 seconds. 2. Press Windows key + V, and then press power button.
Keyboard/mouse (ROM)	Nonvolatile, 2 KB embedded in the super I/O controller (SIO2)	Yes	N/A
Keyboard/mouse (RAM)	Volatile, 256 bytes embedded in the super I/O controller (SIO2)	No	Unplug unit from main power.
LOM EEPROM	Nonvolatile, 2 MB embedded in LAN controller	No	N/A
Trusted Platform Module (TPM)	Nonvolatile; 51 KB ROM for firmware and 38 KB system parametric data	No[3]	Follow instructions below under "Clearing TPM."

[1] Under typical operation, the only user data stored on the primary storage device are preferences for device configuration and settings for connections. However, the administrator can configure the system to allow users to store data locally.

[2] The only user data potentially stored in BIOS Settings are the ownership and asset tags, administrator password, and startup password.

[3] The Trusted Platform Module might contain encrypted passwords or certificates generated from user or administrator input.

Questions and answers

Use this section to answer your questions about nonvolatile memory.

1. **How can the BIOS settings be restored (returned to factory settings)?**

IMPORTANT: The restore defaults feature does not securely erase any information on your hard drive. See question and answer 6 for steps to securely erase information.

The restore defaults feature does not reset the Custom Secure Boot keys. See question and answer 7 for information about resetting the keys.

   a. Turn on or restart the computer, and then quickly press esc.

   b. Select **Main**, and then select **Apply Factory Defaults and Exit**.

   c. Follow the on-screen instructions.

   d. Select **Main**, select **Save Changes and Exit**, and then follow the on-screen instructions.

2. **What is a UEFI BIOS?**

   The Unified Extensible Firmware Interface (UEFI) BIOS is an industry-standard software interface between the platform firmware and an operating system (OS). It replaces the older legacy BIOS architecture.

   The UEFI BIOS provides an interface to display the system information and configuration settings and to change the configuration of your computer before an OS is loaded. BIOS provides a secure runtime environment that supports a GUI. In this environment, you can use either a pointing device (touch screen, touchpad, pointing stick, or USB mouse) or the keyboard to navigate and make menu and configuration selections. The UEFI BIOS also contains basic system diagnostics.

   In addition, the UEFI BIOS works to initialize the computer's hardware before loading and executing the OS; the runtime environment allows the loading and execution of software programs from storage devices to provide more functionality, such as advanced hardware diagnostics (with the ability to display more detailed system information) and advanced firmware management and recovery software.

3. **Where is the UEFI BIOS located?**

   The UEFI BIOS is located on a flash memory chip. You must use a utility to write to the chip.

4. **What kind of configuration data is stored on the DIMM Serial Presence Detect (SPD) memory module? How would this data be written?**

The DIMM SPD memory contains information about the memory module, such as size, serial number, data width, speed and timing, voltage, and thermal information. This information is written by the module manufacturer and stored on an EEPROM. You cannot write to this EEPROM when the memory module is installed in a computer. Third-party tools do exist that can write to the EEPROM when the memory module is not installed in a computer. Various third-party tools are available to read SPD memory.

5. **What is meant by "Restore the nonvolatile memory found in Intel-based system boards"?**

   This message relates to clearing the Real Time Clock (RTC) CMOS memory that contains computer configuration data.

6. **How can the BIOS security be reset to factory defaults and erase the data?**

   IMPORTANT: Resetting results in the loss of information.

   These steps do not reset Custom Secure Boot Keys. See question and answer 7 for information about resetting the keys.

   a. Turn on or restart the computer, and then quickly press esc.

   b. Select **Main**, and then select **Reset Security to Factory Defaults**.

   c. Follow the on-screen instructions.

   d. Select **Main**, select **Save Changes and Exit**, and then follow the on-screen instructions.

7. **How can the Custom Secure Boot Keys be reset?**

   Secure Boot is a feature to ensure that only authenticated code can start on a platform. If you enabled Secure Boot and created Custom Secure Boot Keys, disabling Secure Boot does not clear the keys. You must also select to clear the Custom Secure Boot Keys. Use the same Secure Boot access procedure that you used to create the Custom Secure Boot Keys, but select to clear or delete all Secure Boot Keys.

   a. Turn on or restart the computer, and then quickly press esc.

   b. Select the **Security** menu, select **Secure Boot Configuration**, and then follow the on-screen instructions.

   c. At the **Secure Boot Configuration** window, select **Secure Boot**, select **Clear Secure Boot Keys**, and then follow the on-screen instructions to continue.

Using HP Sure Start (select products only)

Select computer models are configured with HP Sure Start, a technology that monitors the computer's BIOS for attacks or corruption. If the BIOS becomes corrupted or is attacked, HP Sure Start automatically restores the BIOS to its previously safe state, without user intervention.

HP Sure Start is configured and already enabled so that most users can use the HP Sure Start default configuration. Advanced users can customize the default configuration.

To access the latest documentation on HP Sure Start, go to http://www.hp.com/support. Select **Find your product**, and then follow the on-screen instructions.

13 Swelling or deformation of notebook battery

To protect your hardware from potential damage, HP recommends that if you are experiencing battery swelling, stop using the notebook until you can replace the battery.

You can contact HP to understand what battery replacement options are available. To learn more about Lithium-ion batteries and the factors that can accelerate battery swelling, see https://support.hp.com/us-en/document/ish_6824662-6824706-16.

Swollen notebook batteries

You might notice that your notebook battery has become somewhat deformed or swollen over time. In some cases, the battery swelling might be significant enough to impact other components of the system including the touchpad, keyboard, and chassis.

Swollen battery is not a safety issue

A swollen battery does not present a safety issue. It is the result of the generation of gases per the normal degradation of the battery cell over time.

HP has worked closely with our battery cell suppliers and third-party industry experts to help minimize the potential for HP batteries to swell over time and to identify that swollen batteries are not a safety issue.

Discontinue using a swollen battery

To protect your hardware from potential damage, HP recommends that, if you are experiencing battery swelling, you stop using the notebook until the battery can be replaced.

You can contact https://www.hp.com/go/contacthp to understand what battery replacement options are available.

Replace a swollen battery

If a battery is under warranty, HP will replace the battery per the terms and conditions of the HP Worldwide Limited Warranty or applicable HP Care Packs.

For batteries no longer under warranty, contact HP to purchase a genuine HP replacement battery.

Minimize battery swelling

Multiple factors can accelerate battery swelling.

To help mitigate battery swelling over time, you can use either HP Adaptive Battery Optimizer (consumer notebooks) or HP Battery Health Manager (commercial notebooks) settings to improve battery longevity and performance for various use scenarios.

HP Adaptive Battery Optimizer (consumer notebooks)

HP Adaptive Battery Optimizer technology can help mitigate the factors that cause the battery to swell. It is available on select HP OMEN, HP Spectre, HP Pavilion, and HP ENVY notebook computers.

HP Adaptive Battery Optimizer has been available on select gaming notebooks since 2019 and select consumer notebooks since 2020. To learn more about enabling HP Adaptive Battery Optimizer on your HP notebook, see https://support.hp.com/us-en/document/c06310986.

HP Battery Health Manager (commercial notebooks)

HP Battery Health Manager provides an easy-to-manage solution to help mitigate factors that cause the battery to swell. It is available on select HP ProBook and HP EliteBook notebook computers.

HP Battery Health Manager is available on select commercial notebooks manufactured since 2016. To learn more about HP Battery Health Manager, see https://support.hp.com/us-en/document/ish_4449597-3519507-16.

14 Recycling

When a nonrechargeable or rechargeable battery has reached the end of its useful life, do not dispose of the battery in general household waste. Follow the local laws and regulations in your area for battery disposal.

HP encourages customers to recycle used electronic hardware, HP original print cartridges, and rechargeable batteries. For more information about recycling programs, see the HP website at http://www.hp.com/recycle.

Index

A

AC adapter and battery light, identifying 7
AC adapters, spare part numbers 22
action key, identifying 15
audio-out (headphone)/audio-in (microphone) combo jack, identifying 8
audio, product description 1

B

backup, creating 70
backups 70
battery
  illustrated 19
  spare part number 19
battery swelling 90
BIOS
  determining version 67
  downloading an update 68
  preparing for an update 67
  updating 67
Bluetooth label 16
boot order
  changing using the f9 prompt 69
boot order, changing 72
bottom components 16
bottom cover
  illustrated 19
  removal 40
  rubber feet
    removal 40
    spare part number 40
  spare part number 19, 40
buttons
  left touchpad 10
  power 14, 15
  right touchpad 10

C

camera
  identifying 9
camera light, identifying 9
caps lock light 12
caring for your computer 28
cautions
  electrostatic discharge 24, 25
cleaning your computer 28
  caring for wood veneer 30
  disinfecting 29
  HP Easy Clean 28
  removing dirt and debris 28
components
  bottom 16
  display 8
  keyboard area 10
  left side 7
  lights 11
  right side 6
  touchpad 10
computer major components 18
Computer Setup
  navigating and selecting 66
  restoring factory settings 66
  starting 66
computer specifications 79
connectors
  power 7
control zone 10

D

display
  specifications 79
display assembly
  subcomponents 20
display back cover
  illustrated 22
  spare part number 22
display bezel
  illustrated 21
  spare part number 21
display cable
  illustrated 22
  spare part number 22
display components 8
display panel
  illustrated 21
  product description 1
  spare part number 21
docks, spare part numbers 22
drive light, identifying 6

E

electrostatic discharge (ESD) 24, 25
  preventing damage 24-26
esc key, identifying 15

F

fan
  illustrated 19
  removal 51
  spare part number 19, 51
feet
  illustrated 20
  rubber feet
    spare part number 20
    illustrated 20
  spare part number 20
fingerprint reader 14
  illustrated 20
  removal 48
  spare part number 20
  spare part numbers 48
fn key, identifying 15

G

graphics, product description 1
grounding methods 24-26
guidelines
  packaging 24, 30
  transporting 24, 30
  workstation 24

H

hard drive
  product description 1
  specifications 79
HDMI port
  identifying 7
heat sink
  illustrated 19
  removal 53
  spare part number 19
  spare part numbers 53
hinge
  illustrated 22
  spare part number 22

hinge cover
illustrated 22
spare part number 22
HP PC Hardware Diagnostics UEFI
downloading 76
failure ID code 75
HP Hotkey Support software 76
starting 75, 76
using 75
HP PC Hardware Diagnostics Windows
accessing 73, 74
downloading 74
failure ID code 73
installing 75
using 73
HP Recovery media recovery 71
HP Sure Recover 72
HP Sure Start 85

I

illustrated parts catalog 18
integrated numeric keypad, identifying 15
internal microphones, identifying 9

J

jacks
audio-out (headphone)/audio-in (microphone) 8

K

keyboard
product description 2
keypad, integrated numeric 15
keys
action 15
esc 15
fn 15
num lock 15
Windows 15
Windows Copilot 15

L

labels
Bluetooth 16
regulatory 16
serial number 16
service 16
wireless certification 16
WLAN 16
left control zone, identifying 10, 11
left side components 7
lights
AC adapter and battery 7
camera 9
caps lock 12
drive 6
mute 12
power 6, 12
touchpad 10
low blue light mode 8

M

Manual camera shutter 9
memory
nonvolatile 85
volatile 85
memory module
illustrated 19
product description 1
spare part number 19
memory modules
removal 44
spare part numbers 44
microphone
product description 1
model name 1
mute light, identifying 12

N

nonvolatile memory 85
num lock key, identifying 15

O

operating system, product description 3

P

packaging guidelines 24, 30
pointing device, product description 2
ports
HDMI 7
product description 2
USB 5 Gbps 7
USB Type-C 10 Gbps 8
power button, identifying 14, 15
power connector
identifying 7
power connector cable
illustrated 19
removal 63
spare part number 19, 63
power cord
requirements for all countries 82
requirements for specific countries and regions 82
set requirements 82
power cords, spare part numbers 23
power light, identifying 6, 12
power requirements, product description 2
primary storage
product description 1
processor
product description 1
product description
audio 1
display panel 1
graphics 1
hard drive 1
keyboard 2
memory module 1
microphone 1
operating system 3
pointing device 2
ports 2
power requirements 2
primary storage 1
processors 1
product name 1
security 3
serviceability 5
solid-state drive 1
video 1
wireless 2
product name 1
product name and number, computer 16

R

recovery 70
discs 71
media 71
USB flash drive 71
recovery media 70
creating using HP Cloud Recovery Download Tool 70
creating using Windows tools 70
regulatory information
regulatory label 16
wireless certification labels 16

Remote HP PC Hardware Diagnostics UEFI settings
customizing 78
using 77
removal and replacement procedures 33, 40
solid-state drive 45
removing personal data from volatile system memory 85
restoring 70
restoring and recovery methods 71
right control zone, identifying 10, 11
right side components 6

S

Screw Kit, spare part number 23
security, product description 3
serial number, computer 16
service labels, locating 16
serviceability, product description 5
setup utility
navigating and selecting 66
restoring factory settings 66
slots
memory card reader 6
microSD memory card reader 6
solid-state drive
illustrated 20
product description 1
removal and replacement 45
spare part number 20
specifications 80
spare part country codes 64
speaker
removal 56
spare part numbers 56
speakers 13
illustrated 20
spare part number 20
special keys
identifying 14
using 14
specifications
computer 79
display 79
hard drive 79
solid-state drive 80
static electricity 24, 25
support information 30
Sure Start
using 69, 89
swelling or deformation of notebook battery 90
system board
illustrated 19
removal 54
spare part number 19
spare part numbers 54
system memory, removing personal data from volatile 85
system restore 71
system restore point, creating 70

T

top cover with keyboard
spare part numbers 64
top cover/keyboard
illustrated 19
spare part number 19
touchpad
illustrated 19
removal 50
settings 10
spare part number 19, 50
touchpad buttons
identifying 10
touchpad components 10
touchpad light, identifying 10
touchpad settings, adjusting 10
touchpad zone, identifying 10, 11
TPM settings 69
transporting guidelines 24, 30
traveling with the computer 16

U

USB 5 Gbps port, identifying 7
USB board
removal 49
spare part numbers 49
USB Type-C 10 Gbps port, identifying 8

V

vents, identifying 16
video, product description 1

W

Windows
backup 70
recovery media 70
system restore point 70
Windows Copilot key, identifying 15
Windows key, identifying 15
Windows tools, using 70
wireless antennas
illustrated 22
spare part number 22
wireless antennas, identifying 9
wireless certification label 16
wireless, product description 2
WLAN antennas, identifying 9
WLAN device 16
WLAN label 16
WLAN module
illustrated 19
removal 46
spare part number 19
spare part numbers 46
workstation guidelines 24