Poly Video Mode Administrator Guide 4.4.0

SUMMARY

This guide provides administrators with information about configuring, maintaining, and troubleshooting the featured product.

Table of contents

1 About this guide 1

Audience, purpose, and required skills 1

Icons used in Poly documentation 1

2 Getting Started 2

Product Overview of Poly Video Systems 3

Poly Studio G62 product overview 3

Poly G7500 System Features and Capabilities 3

Poly Studio X72 features and capabilities 4

Poly Studio X70 Features and Capabilities 4

Poly Studio X52 Features and Capabilities 5

Poly Studio X50 Features and Capabilities 5

Poly Studio X30 Features and Capabilities 6

Poly Studio E70 Camera Overview 6

Administrator Features and Capabilities 6

Overview of system hardware 8

Poly Studio G62 system ports 8

Poly G7500 Hardware 9

Poly G7500 System Ports 9

Poly Studio X72 hardware 10

Poly Studio X72 privacy shutter behavior 11

Poly Studio X72 hardware ports 11

Poly Studio X70 Hardware 12

Poly Studio X70 Privacy Shutter Behavior 13

Poly Studio X70 System Hardware Ports 13

Poly Studio X52 Hardware 14

Poly Studio X52 System Ports 14

Poly Studio X52 Privacy Cover 15

Poly Studio X50 Hardware 15

Poly Studio X50 System Ports 16

Poly Studio X50 Privacy Cover 17

Poly Studio X30 Hardware 17

Poly Studio X30 System Ports 18

Poly Studio X30 Privacy Cover 18

Poly Studio E70 Camera Hardware 19

Poly Studio E70 Ports 19

Poly Studio E70 Privacy Shutter Behavior 20

Poly Studio E60 Camera Hardware 20
Poly Studio E60 Ports 21
Poly Studio E60 Privacy Shutter Behavior 22
Powering the System On and Off 22
Navigating the System 24
Access the System Web Interface 24
LED Status Indicators 25
Poly Studio G62 LED behavior 25
LED Status Indicators for the Poly G7500 System 25
LED status indicators for the Poly Studio X72 and Poly Studio X70 systems 26
LED Status Indicators for the Poly Studio X52 System 26
LED Status Indicators for Poly Studio X50 and Poly Studio X30 Systems 27
LED Status Indicators for the Poly Studio E70 Camera 27
Poly Studio E60 LED indicators 28
3 Setting Up the System 29
Required components 29
Set up your system using the system web interface 29
Default System Configuration 30
Completing Initial System Setup 31
Complete setup with the system web interface 32
Complete Setup with Provisioning 32
Registering the System with Poly Lens 34
Register the System with Poly Lens During System Setup 34
Register the System with Poly Lens Post Setup 34
Change the Conferencing Partner Application 34
Managing Peripheral Devices 35
Pairing IP Devices on the Link-Local Network (LLN) 35
Connecting IP peripherals to the Poly Studio G62 LLN port 35
Using modular room LLN switches 36
Configure the network switch 36
Connect modular room IP peripherals to the Poly Studio G62 LLN port using a network switch 37
Automatically Pair an IP Device 38
Disable Automatic Pairing 38
Manually Pair an IP Device 38
Pairing IP Devices on the Local Area Network (LAN) 38
Pairing a Poly Trio C60 speakerphone to the system 38
Configure a Poly Trio speakerphone for Pairing 39
Pair an IP Device on the Primary Network 39
Unpair an IP Device 40
Connect a USB Device 40
Poly Bluetooth Remote Control 40
Configure Remote Control Behavior 41
Pair a Bluetooth Remote Control 41
Unpair a Remote Control 42

Poly IR Receiver and IR Remote 42
Poly IR Remote Control Button Functions 42
IP Microphones 44
Poly IP Table Microphone ports 44
Poly IP Ceiling Microphone Ports 44
LED Status Indicators for IP Microphones 45
Poly Microphone IP Adapter 45
Microphone Adapter Ports 45
LED Status Indicators for the Microphone Adapter 46
Powering the Microphone Adapter On and Off 47
Connecting Microphones to the Microphone Adapter 47
Move a Microphone Adapter to Another Location 47
Connecting a Poly Studio E70 to a Poly Studio G62 or Poly G7500 system 48
Switch a Studio E70 USB-connected camera to IP LLN connected 49
Unpair a Studio E70 camera from a G7500 to use it as a USB camera 49
Disable IP Camera Mode by Performing a Factory Reset on a Studio E70 50
Connect a Poly Studio E70 to a Poly G7500 System using a USB cable 50
Connecting Poly Studio E60 to Poly G7500 or Poly Studio G62 51
Set up your Poly Studio E60 camera 51
Connecting a Poly Studio E60 to a Poly Studio G62 or a Poly G7500 as an IP LLN Camera 51
Connect a Poly Studio E60 with a Poly Studio G62 as an IP LLN camera 52
Connect a Poly Studio E60 with a Poly G7500 as an IP LLN camera 52
4 Configuring General Settings 54
Name the Device and Room 54
Provide Contact Information 54
Set the Date and Time 55
Set the System Location 56
Set the Local Interface Language 56
Configure Sleep Settings 56
Configure Out of Office Settings 57
Change Studio X Series LED Bar Brightness 57
Change the Conferencing Partner Application 57
Device Mode 59
Set the Conferencing Provider to Device Mode 59
Set the Device Mode Idle Timeout 59
Disable Poly Device Mode 59
Display a Button to Access Camera Controls in Device Mode 60
System Usage Data Collected by Poly 61
Send Usage Data to Poly 61
5 Using a Provisioning Service 62
Register the System with Poly Clariti Manager Provisioning Service 62
Download a Provisioning Template Configuration File 63
Register the System with the Poly Lens Provisioning Service 63

Register the System Using DHCP Auto Discovery 64

6 Configuring Network Settings 65

Configuring Wired LAN Settings 66
Automatically Obtain IPv4 Address Settings 66
Manually Configure IPv4 Address Settings 66
Automatically Obtain IPv6 Address Settings 66
Manually Configure IPv6 Address Settings 67
Manually Assign a Host Name and Domain Name 67
Manually Configure DNS Settings 67
Configure System VLAN Settings 68
Configure System 802.1X Settings 68
Configure Wired LAN Options 69

LLDP and LLDP-MED Support 71
LLMP-MED Information Discovery 71
Behavior When LLDP is Enabled 71
Enable LLDP 71

Configure Wi-Fi as the Primary Network 72

Configure Wi-Fi Settings 73

Configure Network Quality Settings 75

Configure H.323 Settings 76

Configure SIP Settings 78

AS-SIP Settings 81
Enable AS-SIP Settings 81
Add a Network Domain for Outbound Calls 81
Delete a Network Domain for Outbound Calls 81
Select the Default Network Domain for Outbound Calls 81

Enable Point-to-Point Call Escalation to a Clariti Core Conference Call 81

Wireless Devices 83
Specify the Wireless Operating Channel for Miracast-Certified Devices 83
Enable Miracast Over Infrastructure 83
Disable Wireless Options 84

7 Securing the System 85

Managing System Access 86
Local Accounts 86
Configure Password Policies 86
Create Local Administrator Credentials 87
Change Administrator Credentials 87
Configure Account Lockout Settings 88
Enable External Authentication 88
Configure System Access Settings 89
Command-Line API Access 90
Enable Command-Line API Access Over SSH 90
Configure the SSH Port Lock 90
Enable Command-Line API Access Over Telnet 90

Disable the Telnet Password ... 91
Locking the Telnet Port ... 91
Configure Serial Port Settings ... 91
Disable Command-Line API Access ... 92
Configure the System Web Interface Port Lock ... 92
Disable USB Ports ... 93
Detecting Intrusions ... 93
PKI Certificates ... 94
Create a Certificate Signing Request ... 94
Create a TC10 or TC8 Certificate Signing Request ... 95
Configure Certificate Validation Options ... 96
Install a Certificate ... 97
View a Certificate ... 97
View a TC8 or TC10 Certificate ... 98
Delete a Certificate ... 98
Certificate Revocation ... 98
Manually Upload a CRL ... 98
Delete a CRL ... 99
Disable the Security Code ... 99
Enable or Disable Content Saving ... 99
System Allow List ... 100
Add IP Addresses to the Allow List ... 100
Delete IP Addresses from the Allow List ... 100
IPv4 Address Formats ... 100
IPv6 Address Formats ... 100
Call Encryption ... 102
Configure Call Encryption ... 102
H.460 Firewall/NAT Traversal ... 103
Configure the System for H.460 Firewall/NAT Traversal ... 103
Set Up a Security Banner ... 105
Simple Certificate Enrollment Protocol (SCEP) ... 106
Install a SCEP Certificate ... 106
Configuring Simple Certificate Enrollment Protocol (SCEP) ... 106
Web Proxies ... 108
Enable the System to Use a Web Proxy ... 108
Set Up Automatic Web Proxy Configuration ... 108
Set Up Semi-Automatic Web Proxy Configuration ... 109
Manually Update the PAC File on the System ... 109
Manually Configure a Web Proxy ... 109
Sample PAC File ... 110
View Connections to the System ... 110
System Port Usage ... 110
Wireless Port Usage with Miracast-Certified Devices ... 114
8 Configuring Call Settings ... 116

Configure Call Settings 116
Configure Dialing Options 118
Set Call Answering Mode 118
Set Preferred Call Speeds 119
Configure the Recent Calls List 119
Clear Recent Calls 119
9 Configuring Audio Settings 120
Configure General Audio Settings 120
Audio Input 122
Configure IP Microphones 122
Configuring the Microphone Adapter 122
Polycom Acoustic Fence 123
Configure Polycom Acoustic Fence 124
Specify the Primary and Fence Microphones 124
Specify a Different Primary Microphone 125
Poly NoiseBlockAI v2 125
Enable NoiseBlockAI v2 126
Live microphone switching 126
Configure microphone switching on Poly Studio X systems 127
Configure HDMI Audio Input 127
Configure 3.5 mm audio input 127
Using Poly Trio Microphones 128
Configure NoiseBlockAI When Paired with Poly Trio 129
Configuring the Microphone Adapter 129
Audio Output 130
Configure audio output for HDMI and 3.5 mm audio 130
Configure Audio Output Settings on Studio X Systems 130
Enable Speaker Volume Boost 131
Using Poly Trio Speakers 131
Choose Speakers When Paired with Poly Trio C60 131
Set the 3.5 mm Audio Output mode 131
Connecting a USB Audio Device to the System 132
Connect a USB Audio Device to the System 132
Using USB and Bluetooth Headsets 132
Configure Poly Studio X52 hearing augmentation with Creative Labs Sound Blaster USB 132
Using the Shure IntelliMix P300 133
Support for QSC Core Series and Biamp Audio Processors 133
Using the EagleEye Cube USB Camera Microphone 133
Enable Poly Trio C60 Speakers and Microphones in Microsoft Teams Mode 133
Audio I/O Specifications 134
10 Configuring Video and Camera Settings 135
HDMI I/O 136
Supported HDMI Output Resolutions for Single-Monitor Setups 136
Supported HDMI Output Resolutions for Dual-Monitor Setups 136

Supported HDMI Input Resolutions 137
Supported HDCI Input Resolutions 137
Configure Monitor Settings 137
Configure a Touch Monitor 138
Monitors with CEC 139
Disable CEC 139
Enable CEC 139
Configure General Camera Settings 139
Reset Camera Settings to Defaults 141
Calibrate EagleEye Producer Group Framing 141
Use MJPEG Video Format on EagleEye Cube Cameras 142
Selecting the Primary Camera 143
Camera Priority 143
Maximum Supported Camera Connections in Poly Video Mode 143
Configuring video input settings 144
Configure General Video Input Settings 144
Configure HDMI Input Settings 145
Adjust the White Balance 146
Adjust Your Studio X Camera Lighting Based on Your Workspace 146
Configure Camera Tracking Settings on Poly Studio G62 and Poly G7500 147
Configure Camera Tracking Settings for Studio X Family Systems 147
Select People Framing 148
Select Frame Presenter on Poly Studio E60 148
Configure the Frame Presenter tracking area 148
Poly DirectorAI Perimeter 149
Define the DirectorAI Perimeter 149
Configure DirectorAI Perimeter settings from Poly TC10 or Poly TC8 149
Video Codec Capabilities 151
H.265 High Efficiency Video Coding 151
Supported H.265 People Stream Resolutions During Calls 151
Supported H.265 Content Stream Resolutions During Calls 152
H.264 Advanced Video Coding 152
Supported H.264 People Stream Resolutions During Calls 152
Supported H.264 Content Stream Resolutions During Calls 153
11 Setting Up a Directory 154
Register with the Polycom Global Directory Server 154
Register with an LDAP Directory Server 154
Managing Contacts and Favorites 156
Types of 156
Manage Contacts 156
Unfavorite a contact 156
12 Calendaring Service 158
Configure a Calendaring Service 158

13 Sharing Content 161
Default Options for Sharing Content 161
Disable Screen Mirroring Options 161
14 Customizing the Local Interface 162
Change the Home Screen Background Image 162
Adding a custom home screen to Poly TC10 or Poly TC8 162
Restore the Default Background Image 162
Hide the Self-View Picture-in-Picture Display on the System Monitor 162
Hide the Task Buttons on the System Monitor 163
Customize the Address Bar 163
Display Meetings or Favorites on the Home Screen 163
Configure Dual Monitor Display Settings 164
Digital Signage 165
Configure Digital Signage 165
15 Configuring System Applications 166
Extron Environment Controls 167
Enable Environment Controls 167
Set Up to the Extron Control App on the Poly TC8 or Poly TC10 Device 167
A/V controls integration on Poly TC10 and Poly TC8 167
Support for Poly Connect Call Control by Pexip 169
Configure system settings for Poly meeting control app 169
16 Controlling the System Remotely 170
Capture a diagnostic video from a Poly Studio E70 connected as an IP LLN camera 170
Remotely Capture a Diagnostic Video Clip 170
Wake the System Remotely 171
Place a Call from the System Web Interface 171
17 System Maintenance 172
Locate the System Serial Number 172
Locate the system IP address using a paired Poly touch controller 172
Locate the system IP address using the system monitor and a USB mouse 172
Unlock System Settings 173
Updating Software 174
Updating Paired Devices 174
Updating a Paired Poly TC8 or Poly TC10 174
Updating a Paired Poly Trio 174
Updating the system software 175
Updating your Poly G7500, Poly Studio G62, and Poly Studio X series system 175
Manually Update Software 176
Automatically Update Software 176

Update your system using a USB flash drive ... 177
Update the Poly Bluetooth Remote Control Firmware ... 177
Update Poly HDCI Cameras ... 178
Downgrading Software ... 179
Manually Downgrade Software in the System Web Interface ... 179
Downgrade Software with a USB Flash Drive ... 179
Restart the System ... 179
Scheduled Auto Restart ... 180
Configure Scheduled Auto Restart ... 180
Reset System Settings ... 180
Factory Restore the System ... 181
Factory Restore the Poly Studio X52 ... 182
Factory Restore the Poly Studio E70 Camera ... 183
Factory Restore the Poly Studio E60 Camera ... 183
Factory Restore a Table Microphone ... 184
Factory Restore a Ceiling Microphone ... 184
Factory Restore a Microphone Adapter ... 185
18 Diagnostic Functions ... 187
Import an audio Configuration file supplied by Poly support ... 187
Audio Tests ... 188
Test Speakers ... 188
Test Audio Levels ... 188
Test Polycom StereoSurround ... 189
Check Provisioning Results ... 189
Checking System Status ... 190
Check Status in the Local Interface ... 190
Check Status in the System Web Interface ... 191
Checking the Web Proxy Configuration ... 192
PAC File Status ... 192
Verify the PAC File Contents ... 192
Logs ... 193
Consolidated System and Peripheral Device Logs ... 193
Configure Log Preferences ... 193
Configure Log Level ... 194
Retrieve Log Files ... 195
Transfer Logs to a USB Flash Drive ... 195
Configure Remote Logging ... 196
Configure Logging to System Internal Storage ... 197
Sample Log File ... 198
Run a Trace Route ... 199
SNMP Reporting ... 200
Configure SNMP ... 200

Download MIBs ... 203
Test the Call Experience ... 203
Test Connection with Another System ... 203
View Call Statistics ... 203
Verify Poly Lens Registration Status ... 204
19 Troubleshooting ... 205
Audio Issues ... 206
Poly Trio Audio Meter Not Displaying in System Web Interface ... 206
Fix Polycom Acoustic Fence Issues with G7500 ... 206
Camera Issues ... 207
A Portion of the EagleEye Cube USB Camera Name Is Cut Off ... 207
G7500 Loses Connection to a Connected Studio E70 Camera ... 207
Lighting Conditions Impact Picture Quality ... 207
Presenter Tracking Takes Longer Than Expected or Doesn't Identify a Presenter ... 208
Studio X30 Doesn't Update the Displayed Video Orientation ... 208
System Web Interface Is Displaying Invalid or Disabled Camera Settings ... 208
Content Sharing ... 209
Can’t Use AirPlay to Share Full Screen Video From a Website or App ... 209
General Issues ... 210
Contacts with the Same Name Don't Display in the Contact List ... 210
Monitor Loses Signal After Monitor Swap ... 210
IP Devices ... 211
Paired IP Devices ... 211
IP Device Can’t Pair to the Video System ... 211
IP Device Doesn’t Display On the Available Devices List ... 211
Paired IP Device is Disconnected ... 212
IP Device Paired to Inaccessible Video System ... 212
IP Audio Device is Disconnected from G7500 ... 212
Paired IP Device Doesn’t Complete Software Update ... 213
System Sleep and Wake Behavior ... 214
The System Restarts When Sleeping or Waking ... 214
Monitor Doesn't Fully Wake from Sleep with CEC Enabled ... 214
Can’t Wake the System by Touching the Monitor ... 214
Networking Issues ... 215
LDAP Directory Server Ignores the Minimum TLS Version Setting ... 215
Studio X52 Doesn't Receive an IP Address When Connected to a Netgear Smart Switch 1G Port ... 215
Provisioning Issues ... 216
Can’t Connect to Secondary Network After Changing Country Code ... 216
Poly Clariti Manager Provisioning Fails After Downgrading Software ... 216
Zero Touch Onboarding Connection Fails During Initial Setup or After Reset ... 216
LED Status Indicators for the System LAN Ports ... 216
System Update Issues ... 218
After Updating a Studio E70 Camera It Becomes Unresponsive ... 218
System Doesn't Update Connected Peripherals ... 218

Recovering a System After an Unsuccessful Update to VideoOS 4.0 218
Studio E70 Powered by a G7500 LLN Port Becomes Disconnected After an Update 219
Studio X70 Stuck in Reboot Loop After Enabling Device Mode 219
Contacting Technical Support 220
Locate the System Serial Number 220
20 Getting help 221
HP Inc. addresses 221
Document information 221

1 About this guide

This section provides clarifying information about this guide.

Audience, purpose, and required skills

This guide is written for a technical audience.

You must be familiar with the following concepts before beginning:

- Current telecommunications practices, protocols, and principles
- Telecommunication basics, video teleconferencing, and voice or data equipment
- OpenSIP networks and VoIP endpoint environments

Icons used in Poly documentation

This section describes the icons used in Poly documentation and what they mean.

WARNING! Indicates a hazardous situation that, if not avoided, **could** result in serious injury or death.

CAUTION: Indicates a hazardous situation that, if not avoided, **could** result in minor or moderate injury.

IMPORTANT: Indicates information considered important but not hazard-related (for example, messages related to property damage). Warns the user that failure to follow a procedure exactly as described could result in loss of data or in damage to hardware or software. Also contains essential information to explain a concept or to complete a task.

NOTE: Contains additional information to emphasize or supplement important points of the main text.

TIP: Provides helpful hints for completing a task.

2 Getting Started

The Poly Studio G62, Poly G7500, and Studio X Family systems provide video conferencing capabilities and collaboration tools for any size meeting space or room.

Product Overview of Poly Video Systems

Poly Studio G62, Poly G7500, Studio X70, Poly Studio X52, Studio X50, and Studio X30 systems in Poly Video Mode support Poly video conferencing and content sharing features.

Poly Studio G62 product overview

The Poly Studio G62 system is a modular video conferencing system with HDMI, link-local network (LLN), and USB connections to support custom conference rooms.

Poly Studio G62 is designed with simplified mounting and PoE+ class 4 power, so you can place it behind a display, under a table, or in an A/V rack. The Poly Studio G62 system supports Poly audio and video products over IP LLN as well as Poly and third-party products using the USB and 3.5 mm system ports.

The Poly Studio G62 system brings the following functionality to your conferencing space:

- Audio innovations such as NoiseBlockAI including Sound Reflection Reduction
- DirectorAI camera framing and tracking
- Configurable second network port for accessories
- Dual monitor 4K video
- Flexible installation with cable management
- USB-C DP Alt Mode port for content and device mode
- Wireless content sharing using Airplay or Miracast

Poly G7500 System Features and Capabilities

G7500 systems support the following features:

- Peripheral cameras and microphones make the system scalable for medium rooms and up to large integrated rooms
- Placing and joining video calls
- Sharing wireless and wired content
- Camera tracking technology that can automatically zoom in on the person talking or frame the group of people in the room (depending on the paired camera and system configuration)
- Poly NoiseBlockAI, which eliminates background and extraneous sound during calls in common working environments
- Polycom Acoustic Fence technology, which enables video conferencing in open workspaces by capturing only the voices in a defined area
- HDMI: Single input and dual output
- Serial port connection
- Using a wired or wireless USB mouse as an input device

Poly Studio X72 features and capabilities

Poly Studio X72 systems support the following features.

- Dual 4K 20MP cameras with 70-degree and 120-degree horizontal field of view ideal for large-size conference rooms.
- Poly IP microphone support using the link local network (LLN) port (supported in a future Poly VideoOS release)
- Poly Expansion microphone support using the RJ11 Poly Expansion microphone port
- High fidelity audio powered by built-in microphones that pick up sound within 7.62 m (25 ft)
- Poly Acoustic Fence technology shields your calls from distracting outside voices and sounds using your conference room microphones to create a defined sound zone
- Poly DirectorAI, which includes a perimeter feature plus group framing, speaker framing, and people framing
- Poly Lens Cloud support for setting up, configuring, and managing your device
- Multiple mounting options. Use the wall mount included with your Poly Studio X72, or purchase a VESA mount, or tabletop stand.

You can mount the Poly Studio X72 above or below a display. The Poly Studio X72 doesn't support inverted mounting. For more information, see the Poly Studio X72 quick start guides.

Poly Studio X70 Features and Capabilities

Poly Studio X70 Features and Capabilities

Studio X70 systems support the following features:

- All-in-one collaboration system for medium-to-large rooms
- No need for a separate PC, laptop, or codec to run video-conferencing software
- Placing and joining video calls
- Sharing wireless and wired content
- Dual built-in 4K cameras
- Camera tracking technology that automatically frames the group of people in the room
- Hi-fidelity, built-in stereo microphones that pick up sound within 7.62 m (25 ft) and use spatial audio for life-like presence and clarity
- Poly NoiseBlockAI, which eliminates background and extraneous sound during calls in common working environments
- HDMI: Single input and dual output
- Using a wired or wireless USB mouse as an input device

Poly Studio X70 Mounting Orientation

You can mount the Studio X70 above or below a display. The Studio X70 doesn't support inverted mounting. For information on mounting the Studio X70, see the Studio X70 setup sheet.

Poly Studio X52 Features and Capabilities

Studio X52 systems support the following features:

- All-in-one collaboration system for huddle rooms and small-to-medium rooms
- No need for a separate PC, laptop, or codec to run video-conferencing software
- Placing and joining video calls
- Sharing wireless and wired content
- Sharp 4K, 20MP camera with 95-degree horizontal field of view
- Camera tracking technology that automatically frames the group of people in the room
- Hi-fidelity, built-in stereo microphones that pick up sound within 7.62 m (25 ft) and use spatial audio for life-like presence and clarity
- Poly NoiseBlockAI, which eliminates background and extraneous sound during calls in common working environments
- Dual stereo speakers
- HDMI: Single input and dual output
- Simple to set up, manage, and use with Poly Lens

Poly Studio X52 Mounting Orientation

You can mount the Studio X52 above or below a display. The Studio X52 doesn't support inverted mounting. For information on mounting the Studio X52, see the *Poly Studio X52 Quick Start Guide*.

Poly Studio X50 Features and Capabilities

Studio X50 systems support the following features:

- All-in-one collaboration system for huddle rooms and small-to-medium rooms
- No need for a separate PC, laptop, or codec to run video-conferencing software
- Placing and joining video calls
- Sharing wireless and wired content
- Built-in 4K camera with ultra-wide 120-degree field of view
- Camera tracking technology that automatically frames the group of people in the room
- Hi-fidelity, built-in stereo microphones that pick up sound within 7.62 m (25 ft) and use spatial audio for life-like presence and clarity
- Poly NoiseBlockAI, which eliminates background and extraneous sound during calls in common working environments

- Dual stereo speakers
- HDMI: Single input and dual output
- Using a wired or wireless USB mouse as an input device

Poly Studio X50 Mounting Orientation

You can mount the Studio X50 above or below a display. The Studio X50 doesn't support inverted mounting. For information on mounting the Studio X50, see the Studio X50 setup sheet.

Poly Studio X30 Features and Capabilities

Studio X30 systems support the following features:

- All-in-one collaboration system for huddle rooms and small-to-medium rooms
- No need for a separate PC, laptop, or codec to run video-conferencing software
- Placing and joining video calls
- Sharing wireless and wired content
- Built-in 4K camera with ultra-wide 120-degree field of view
- Camera tracking technology that automatically frames the group of people in the room
- High-fidelity, built-in stereo microphones that pick up sound within 4.57 m (15 ft) and use spatial audio for life-like presence and clarity
- Poly NoiseBlockAI, which eliminates background and extraneous sound during calls in common working environments
- Single mono speaker
- HDMI: Single input and output
- Using a wired or wireless USB mouse as an input device

Poly Studio X30 Mounting Orientation

You can mount the Studio X30 above or below a display. The Studio X30 supports inverted mounting. For information on mounting the Studio X30, see the Studio X30 setup sheet.

Poly Studio E70 Camera Overview

Poly Studio E70 is a dual-camera solution for medium to large conference rooms.

The Poly Studio E70 includes the following features:

- Standalone USB 4K camera with full tracking and framing capabilities
- Visual coverage up to 7.6 m (25 ft)
- Microphones that provide accurate sound source location to support camera tracking

Administrator Features and Capabilities

The G7500 and Studio X Family systems provide features for administrators to deploy, manage, and access systems.

These systems provide the following features and capabilities:

- Remote access for managing standalone systems
- Provisioning with Poly Clariti Manager to support single system, small business, and large multisite enterprise deployments
- SNMP reporting and remote logging
- Industry-standard security techniques, including 802.1X authentication
- Polycom platform on-premises infrastructure and management solutions
- Standards-based video conferencing (SIP and H.323)
- Customizable home screen and monitor layouts

Overview of system hardware

The figures and tables in the following topics provide information about hardware features available on your system.

Poly Studio G62 system ports

The following diagram describes the ports available on a Poly Studio G62 system.

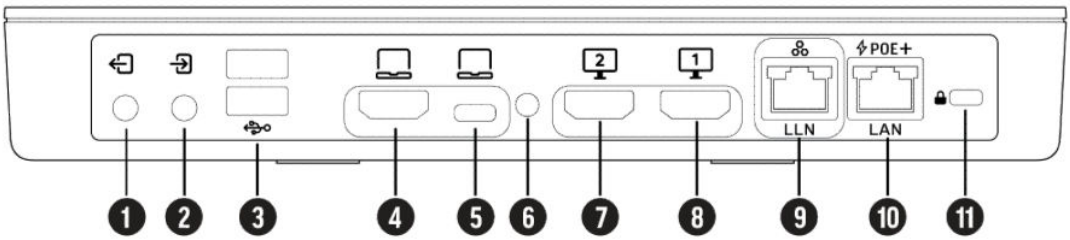

Table 2-1 Poly Studio G62 Ports

Item	Port	Description
1	3.5 mm output	Connects speakers to the system.
2	3.5 mm input	Connects microphones to the system.
3	USB Type-A ports (3.0)	Connects USB cameras or USB audio DSPs.
4	HDMI input	Provides the following options: • Connects an HDMI content source or HDMI camera. • Use the system monitor when connected to a computer HDMI port. Provides content sharing capabilities.
5	USB Type-C port	Provides the following options: • Use the system camera, speaker, and microphone from a connected laptop. • Use the system camera, speaker, microphone, and monitor using a DP Alt-mode connection. Requires a supported DP Alt-mode cable and a computer with a USB Type-C port that supports DP Alt-mode.
6	Pinhole reset	Factory resets the system.
7	HDMI 2	Connects a secondary monitor.
8	HDMI 1	Connects a primary monitor.
9	LLN port	Connects IP peripherals such as a Poly IP microphone or Poly IP camera. This port doesn't provide power. A PoE switch or PoE injector is required to power IP peripherals connected to the LLN port.

Table 2-1 Poly Studio G62 Ports (continued)

Item	Port	Description
10	PoE+ power input	Powers the Poly G7500, Poly Studio G62, and Poly Studio X series system using a class 4 PoE+ injector or PoE+ switch. Provides access to the corporate network.
11	Security lock	Physically secures the system.

Poly G7500 Hardware

The following figure displays the hardware features on the Poly G7500 system. The table lists each feature numbered in the figure.

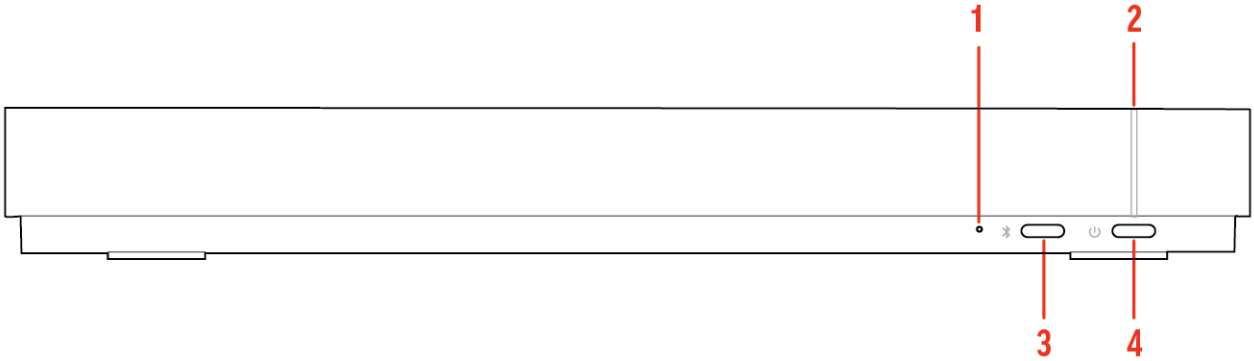

Table 2-2 Poly G7500 Feature Descriptions

Ref. Number	Feature	Feature Description
1	Reset button	Resets the Poly G7500 to the factory software version
2	LED indicator	Indicates the system status
3	Remote control pairing button	Enables the Bluetooth remote control pairing mode
4	Restart button	Restarts your system

Poly G7500 System Ports

The following illustration and table explain the ports on the back panel of your G7500 system.

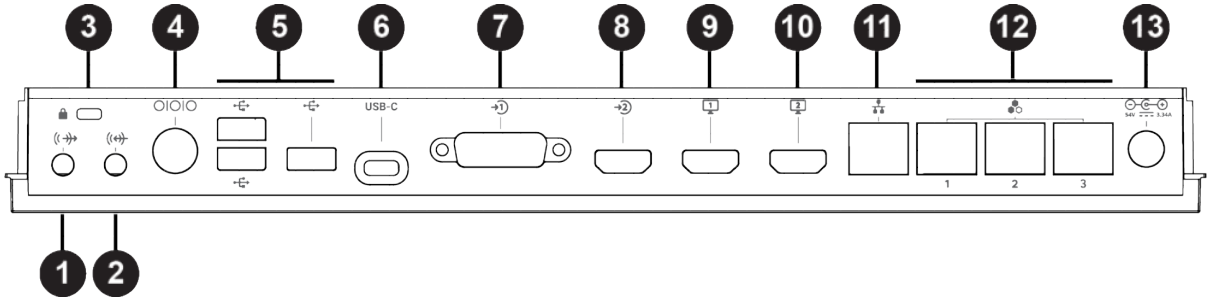

Table 2-3 G7500 System Port Descriptions

Ref. Number	Port Description
1	3.5 mm audio line out
2	3.5 mm audio line in
3	Security lock
4	Mini-DIN/RS-232 serial port NOTE: The serial port is occasionally used by third party control system devices for automation.
5	USB-A ports
6	USB-C port
7	HDCI input for Polycom cameras
8	HDMI input for sharing content (for example, from a laptop)
9	HDMI output for the primary monitor
10	HDMI output for the secondary monitor
11	LAN connection for the system
12	Link-local network (LLN) connections for IP-based peripheral devices
13	Power cord port

Poly Studio X72 hardware

The following illustration and table explain the hardware components on your Poly Studio X72 system.

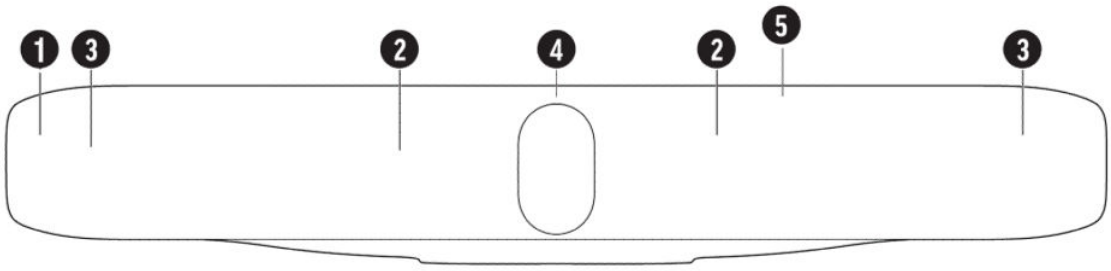

Table 2-4 Poly Studio X72 hardware components

Ref. Number	Feature	Description
1	Mesh screen	Protective screen that covers the front of the system
2	Microphone array	Microphone array that captures audio
3	Speakers	Audio output
4	Dual cameras	Camera array with a privacy shutter that automatically opens or closes, depending on the camera state
5	LED indicators	Indicates the system status and information on the tracked speaker

Poly Studio X72 privacy shutter behavior

The privacy shutter automatically opens and closes depending on the state of the connected video system.

NOTE: Shutter behavior may vary depending on the partner application.

Table 2-5 Poly Studio X72 privacy shutter behavior

System event	Shutter behavior
The system powers on	Shutters open
The system powers off	Shutters close NOTE: If you remove power immediately, the shutters don't close.
The system enters sleep mode or digital signage starts and the **Camera Sleep Setting** is set to **Save Energy**	Shutters close
The system enters sleep mode or digital signage starts and **Camera Sleep Setting** is set to **Fast Wake**	Shutters remain open NOTE: When **Fast Wake** is set, the shutters never close.
You wake the system	Shutters open
You wake the system and the built-in camera isn't the primary camera	Shutters remain closed
You select the built-in camera as the primary camera	Shutters open
The system receives an incoming call	Shutters open
The system is sending video	Shutters are open
The system is in an active call and the video is muted	Shutters are open

Poly Studio X72 hardware ports

The following illustration and table explain the hardware ports on your Poly Studio X72 system.

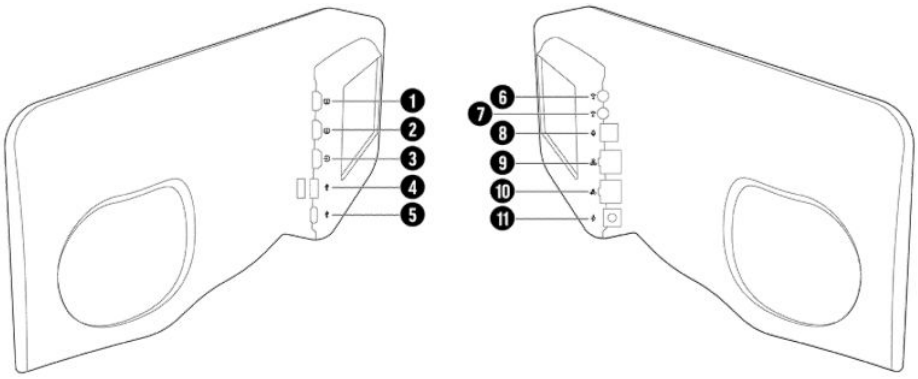

Table 2-6 Poly Studio X72 hardware port descriptions

Ref. Number	Port Description
1	HDMI output for the secondary monitor
2	HDMI output for the primary monitor

Table 2-6 Poly Studio X72 hardware port descriptions (continued)

Ref. Number	Port Description
3	HDMI input Connects a laptop for content sharing or to use the system monitor in Device Mode Connects an HDMI camera for use as an additional people camera
4	USB-A ports
5	USB Type-C port (for Device Mode only) NOTE: Note: USB Type-C port is used for service, installation, and Poly Device Mode only.
6	3.5 mm audio line in
7	3.5 mm audio line out
8	Expansion microphone connection
9	LAN connection for the system
10	Link-local network (LLN) connections for IP-based peripheral devices (supported in a future Poly VideoOS release)
11	Power cord port

Poly Studio X70 Hardware

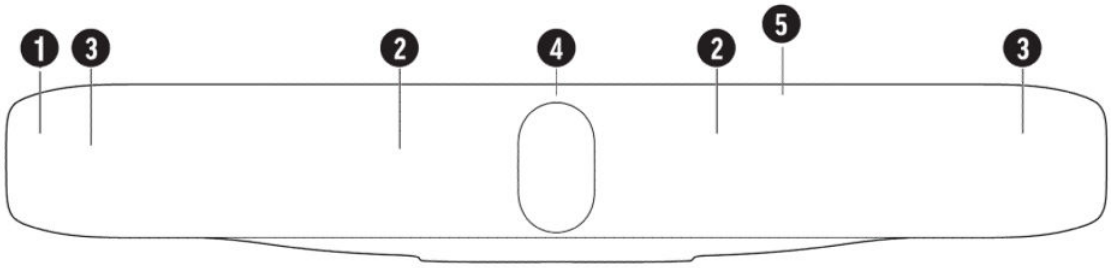

Table 2-7

Ref. Number	Feature	Description
1	Screen	Protective screen that covers the front of the system
2	Microphone array	Microphone array that captures audio
3	Speakers	Audio output
4	Dual cameras	Camera array with a privacy shutter that automatically opens or closes, depending on the camera state
5	LED indicators	Indicates the system status and information on the tracked speaker

Poly Studio X70 Privacy Shutter Behavior

The privacy shutter automatically opens and closes depending on the state of the connected video system.

Poly Studio X70 Privacy Shutter Behavior

System Event	Shutter Behavior
The system powers on	Shutters open
The system powers off	Shutters close NOTE: If you remove power immediately, the shutters don't close.
The system enters sleep mode or digital signage starts and the **Camera Sleep Setting** is set to **Save Energy**	Shutters close
The system enters sleep mode or digital signage starts and **Camera Sleep Setting** is set to **Fast Wake**	Shutters remain open NOTE: When **Fast Wake** is set, the shutters never close.
You wake the system	Shutters open
You wake the system and the Studio X70 built-in camera isn't the primary camera	Shutters remain closed
You select the Studio X70 built-in camera as the primary camera	Shutters open
The system receives an incoming call	If the shutters are closed, they remain closed until the call is answered
The system is sending video	Shutters are open
The system is in an active call and the video is muted	Shutters are open

Poly Studio X70 System Hardware Ports

The following illustration and table explain the hardware ports on your Poly Studio X70 system.

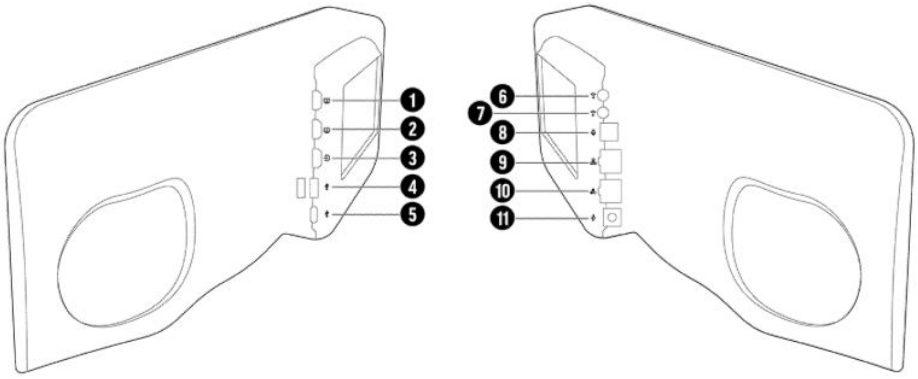

Table 2-8 Poly Studio X70 System Hardware Port Descriptions

Ref. Number	Port Description
1	HDMI output for the secondary monitor
2	HDMI output for the primary monitor
3	HDMI input for sharing content (for example, from a laptop)

Table 2-8 Poly Studio X70 System Hardware Port Descriptions (continued)

Ref. Number	Port Description
4	USB-A ports
5	USB-C port
6	3.5 mm audio line in
7	3.5 mm audio line out
8	Expansion microphone connection
9	LAN connection for the system
10	Link-local network (LLN) connections for IP-based peripheral devices NOTE: This port is disabled and is reserved for future use.
11	Power cord port

Poly Studio X52 Hardware

The following figure displays the hardware features on the Poly Studio X52 system. The table lists each feature numbered in the figure.

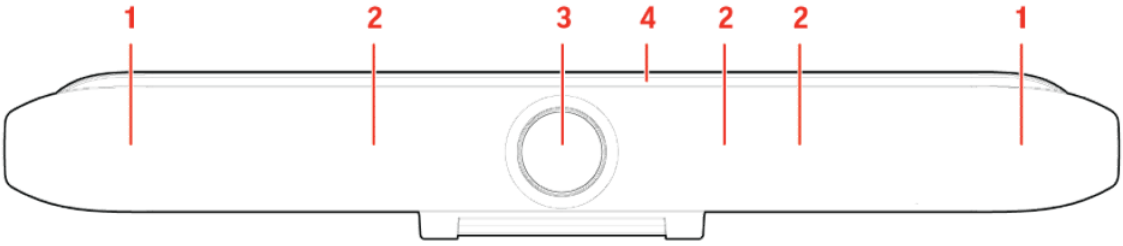

Table 2-9 Poly Studio X52 Feature Descriptions

Ref. Number	Feature	Feature Description
1	Speakers	Audio output
2	Microphone array	Microphone array that captures audio
3	Camera	Camera with a privacy cover that enables or disables the video input as you choose
4	LED indicators	Indicates the system status and information on the tracked speaker

Poly Studio X52 System Ports

The following illustration and table explain the ports on your Poly Studio X52 system.

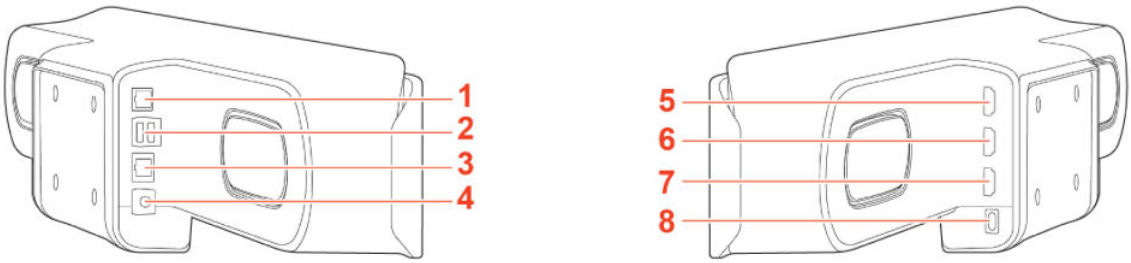

Table 2-10 Poly Studio X52 System Port Descriptions

Ref. Number	Port Description
1	Poly Table Expansion Microphone connection
2	USB-A ports
3	RJ45 Ethernet port
4	Power port
5	HDMI port for secondary monitor
6	HDMI port for primary monitor
7	HDMI port for content sharing and Device Mode
8	USB-C port for Device Mode

Poly Studio X52 Privacy Cover

The Poly Studio X52 system provides a physical cover that you can place over the camera lens to protect your privacy.

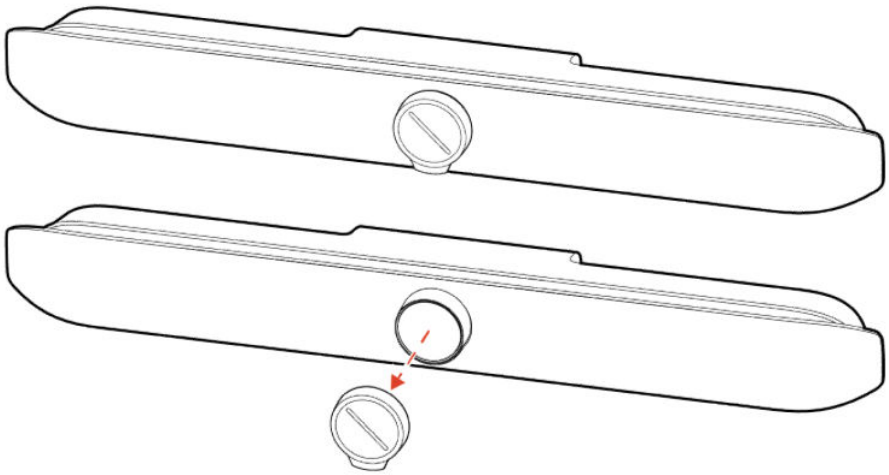

Poly Studio X50 Hardware

The following figure displays the hardware features on the Poly Studio X50 system. The table lists each feature numbered in the figure.

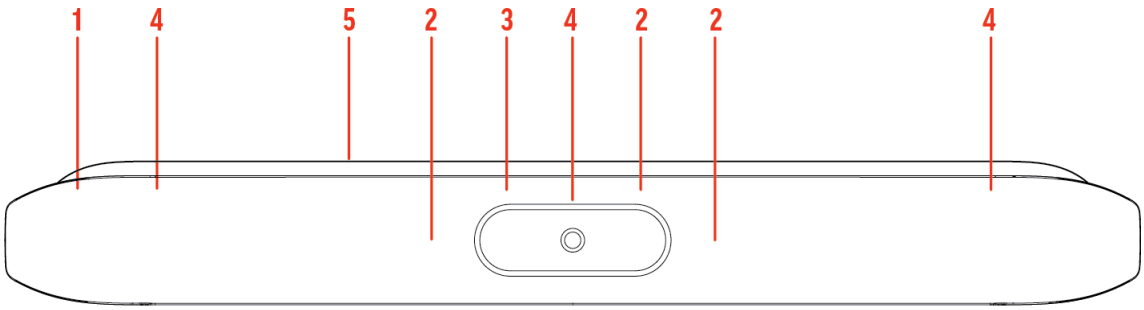

Table 2-11 Poly Studio X50 Feature Descriptions

Ref. Number	Feature	Feature Description
1	Screen	Protective screen that covers the front of your system
2	Microphone array	Microphone array that captures audio
3	Camera	Camera with a privacy cover that enables or disables the video input as you choose
4	Speakers	Audio output
5	LED indicators	Indicates the system status and information on the tracked speaker

Poly Studio X50 System Ports

The following illustration and table explain the ports on your Poly Studio X50 system.

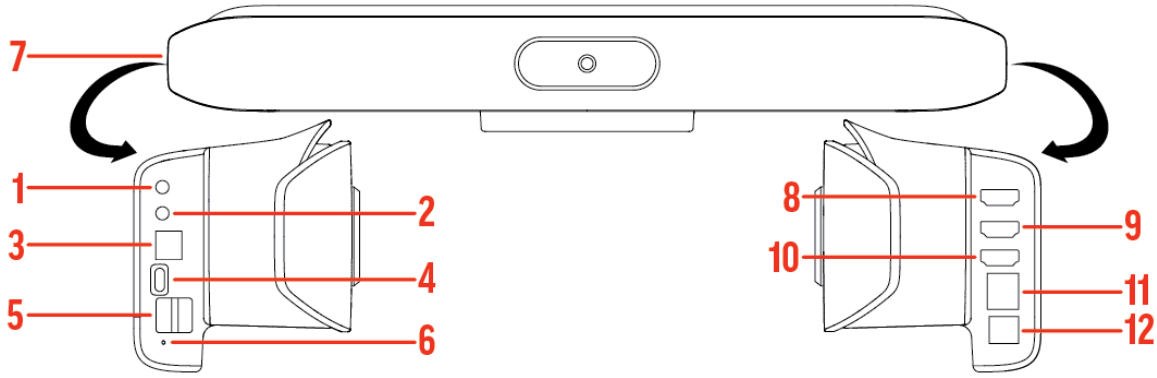

Table 2-12 Poly Studio X50 System Port Descriptions

Ref. Number	Port Description
1	3.5 mm audio line in
2	3.5 mm audio line out
3	Polycom RealPresence Debut expansion microphone connection
4	USB-C port
5	USB-A ports
6	Factory restore pinhole
7	Security lock (on the back flat section of the system)
8	HDMI output for the secondary monitor

Table 2-12 Poly Studio X50 System Port Descriptions (continued)

Ref. Number	Port Description
9	HDMI output for the primary monitor
10	HDMI input for sharing content (for example, from a laptop)
11	LAN connection for the system
12	Power cord port

Poly Studio X50 Privacy Cover

The Poly Studio X50 provides a physical cover that you can place over the camera lens to protect your privacy.

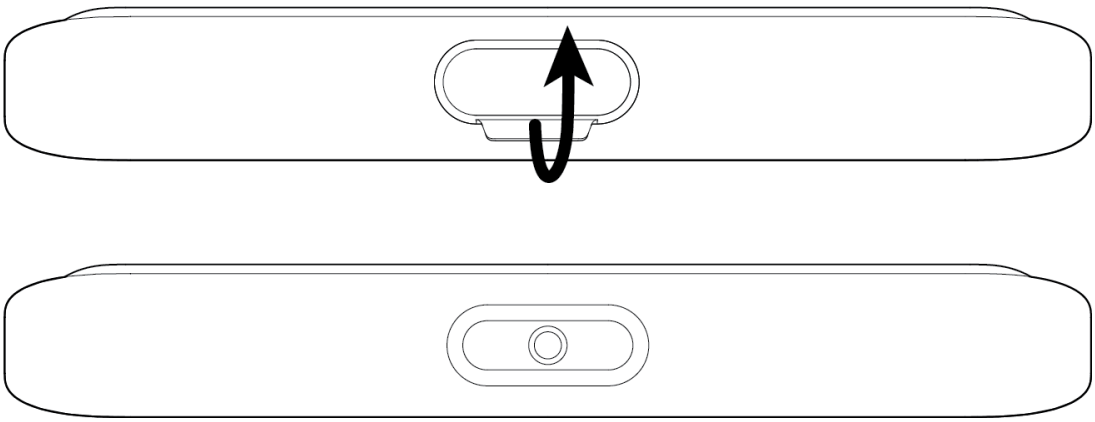

Poly Studio X30 Hardware

The following figure displays the hardware features on the Poly Studio X30 system. The table lists each feature numbered in the figure.

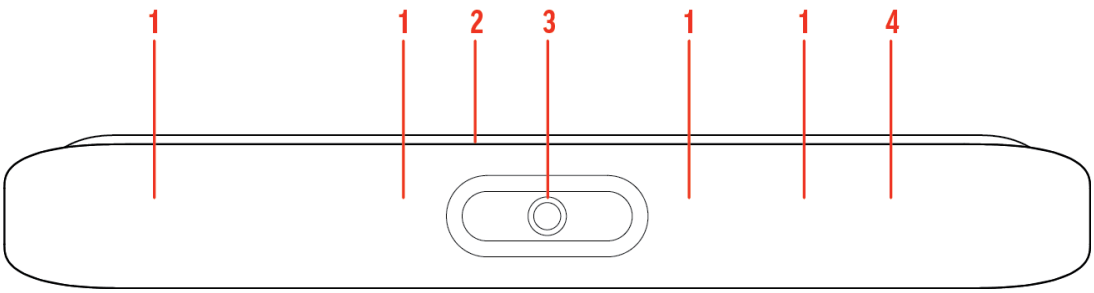

Table 2-13 Poly Studio X30 Feature Descriptions

Ref. Number	Feature	Feature Description
1	Microphone array	Microphone array that captures audio
2	LED indicators	Indicates the system status and information on the tracked speaker
3	Camera	Camera with a privacy cover that enables or disables the video input as you choose
4	Speaker	Mono audio output

Poly Studio X30 System Ports

The following illustration and table explain the ports on your Poly Studio X30 system.

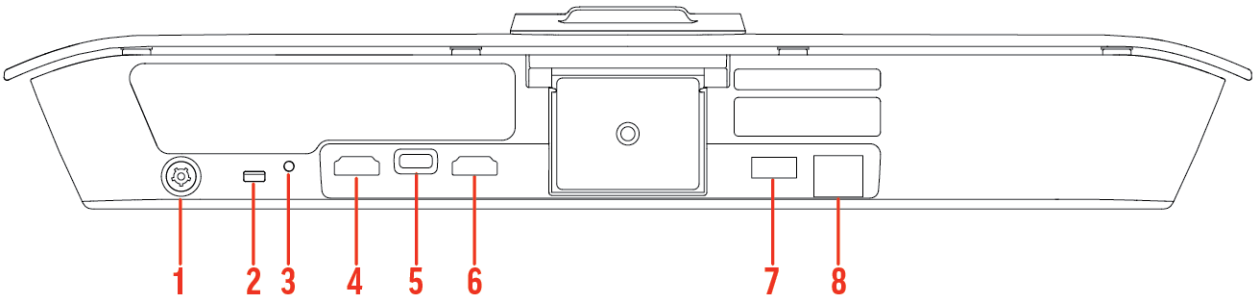

Table 2-14 Poly Studio X30 System Port Descriptions

Ref. Number	Port Description
1	Power cord port
2	Security lock
3	Factory restore pinhole
4	HDMI output for the primary monitor
5	USB-C port
6	HDMI input for sharing content (for example, from a laptop)
7	USB-A ports
8	LAN connection for the system

Poly Studio X30 Privacy Cover

The Poly Studio X30 provides a physical cover that you can place over the camera lens to protect your privacy.

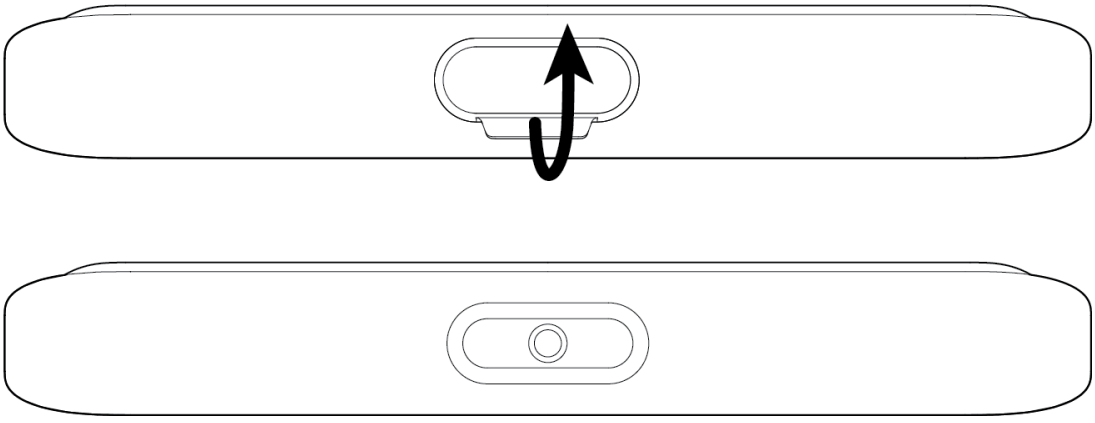

Poly Studio E70 Camera Hardware

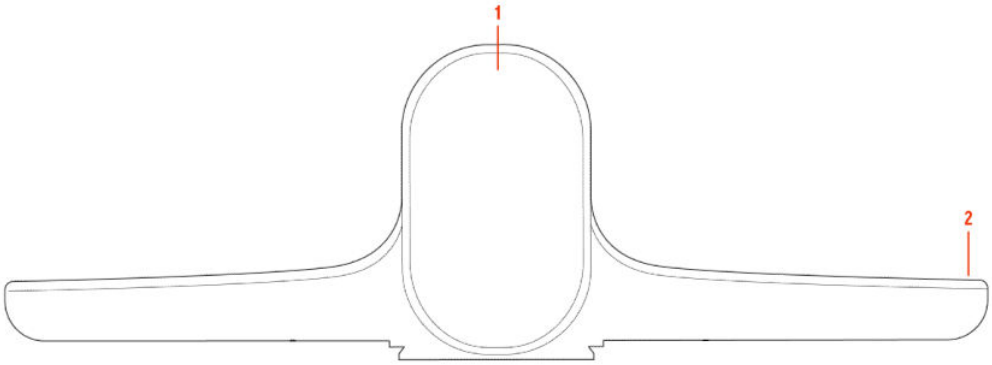

Table 2-15 Poly Studio E70 Feature Descriptions

Reference Number	Feature	Description
1	Dual-cameras	Camera array with a privacy shutter that automatically opens or closes depending on the camera state
2	LED indicators	Front and right indicators that show the status of the camera

Poly Studio E70 Ports

The following illustration and table explain the ports on your Poly Studio E70 camera.

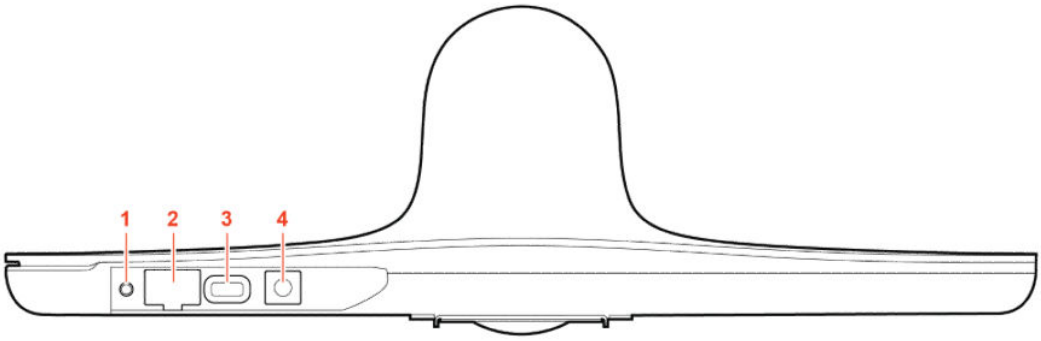

Table 2-16 Poly Studio E70 Port Descriptions

Ref. Number	Port Description
1	Reset button
2	Ethernet port (Can be used to provide power to the camera)
3	USB-C port

Table 2-16 Poly Studio E70 Port Descriptions (continued)

Ref. Number	Port Description
4	Power cord port

Poly Studio E70 Privacy Shutter Behavior

The privacy shutter automatically opens and closes depending on the state of the connected video system.

Table 2-17 Poly Studio E70 shutter behavior

System event	Shutter behavior
The system powers on	Shutters open
The system powers off	Shutters close NOTE: If you remove power immediately, the shutters don't close.
The system enters sleep mode or digital signage starts and the **Camera Sleep Setting** is set to **Save Energy**	Shutters close
The system enters sleep mode or digital signage starts and **Camera Sleep Setting** is set to **Fast Wake**	Shutters remain open NOTE: When **Fast Wake** is set, the shutters never close.
You wake the system	Shutters open
You wake the system and the Studio E70 isn't the primary camera	Shutters remain closed
You select the Studio E70 as the primary camera	Shutters open
The Studio E70 isn't the primary camera and is idle for five minutes	Shutters close
The system receives an incoming call	If the shutters are closed, they remain closed until the call is answered
The system is sending video	Shutters are open
The system is in an active call and the video is muted	Shutters are open

Poly Studio E60 Camera Hardware

The following figures and tables explain the hardware features on the Poly Studio E60 camera.

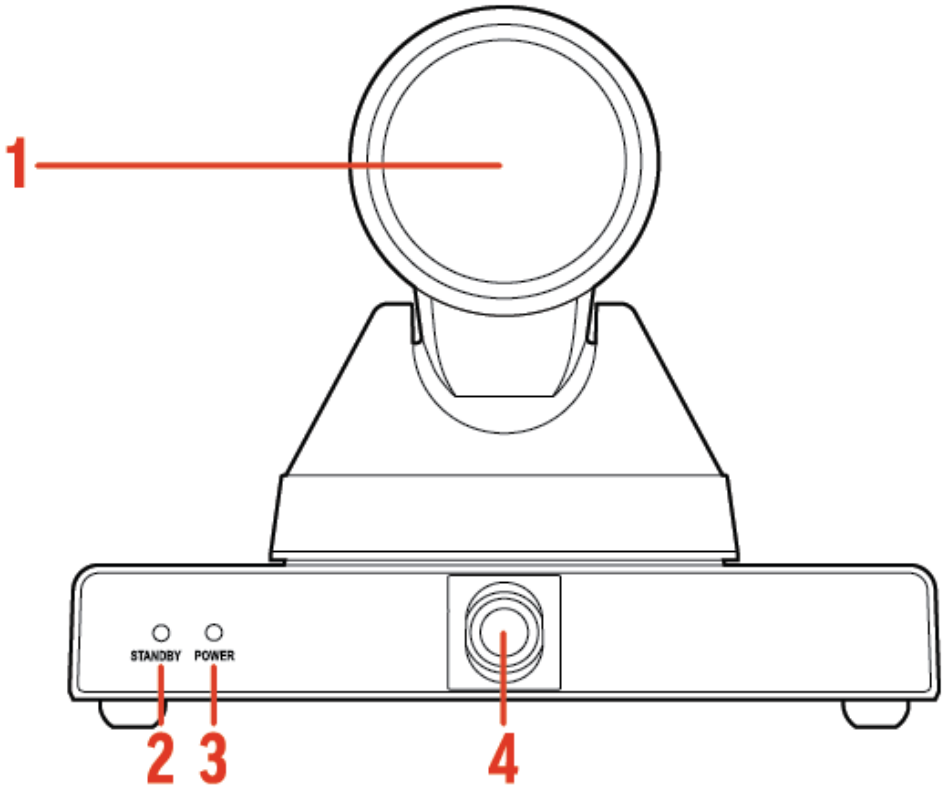

Table 2-18 Poly Studio E60 Feature Descriptions

Reference Number	Feature	Description
1	Optical zoom lens	Optical zoom lens with 12× optical and 16× digital zoom with a removable privacy shutter
2	Standby LED indicator	Indicates device status
3	Power LED indicator	Indicates device status
4	AI lens	The fixed AI lens is used to detect participants within its 107 degree field of view to trigger optical zoom lens to track people in the room.

Poly Studio E60 Ports

The following illustration and table explain the ports on your Poly Studio E60 camera.

IMPORTANT: If you use an Ethernet port to power the Poly Studio E60, the Ethernet port must be able to supply 30W PoE+ Type 2/Class 4 power with a port voltage range of 50V to 57V. The maximum power to device is 25.5W with a voltage range to device of 42.5V to 57V.

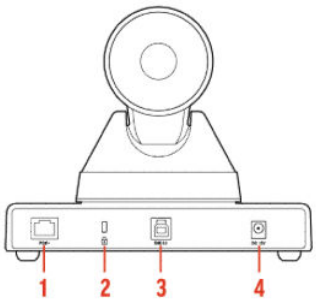

Table 2-19 Poly Studio E60 Port Descriptions

Reference Number	Feature	Feature Description
1	Power over Ethernet+ (PoE+) port	Powers your Poly Studio E60 camera
2	Kensington security slot	Secures your device with a Kensington lock (not provided)
3	USB 3.0 Type-B port	Connects the camera to the video conferencing system or PC using a USB 3.0 Type-B to USB 3.0 Type-A cable
4	12 V DC power port	Connects the camera to a power source using an optional power cable (available separately)

Poly Studio E60 Privacy Shutter Behavior

The Poly Studio E60 camera comes with a physical cover that blocks the camera lens to protect your privacy.

Figure 2-1 Poly Studio E60 privacy cover

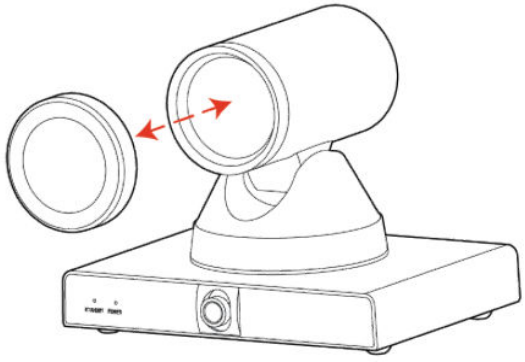

Manually remove the privacy cover before starting your video conference to show your video. Replace the privacy cover to cover the camera lens when not in use.

Powering the System On and Off

The system powers on when you plug it in to a power source.

Poly recommends the following when powering off or restarting your system:

- Don’t restart or power off the system during maintenance activities (for example, while a software update is in progress).

- If a system restart is necessary, use the system web interface, Poly Lens, RestAPI, Telnet, or SSH. If possible, avoid removing power to restart the system.

Navigating the System

Poly Studio V72 systems don't include a user interface. To change settings, access the system web interface or use the computer connected to your Poly Studio V72.

Access the System Web Interface

Access the system web interface to perform administrative tasks.

The system web interface enables you to do the following actions:

IMPORTANT: If not prompted to do so during setup, Poly recommends changing the administrator password in the system web interface.

- Finish setting up your system.
- Remotely configure and manage your system. Unlike the local interface, you can configure every setting through the system web interface. Local interface is intended only for the initial setup.
- Control certain user functions of the system, such as placing calls and ending content sessions.
- Manage contacts.

1. Open a web browser and enter the system IP address.

   When setting up your system, the onscreen instructions display the IP address to use.

2. Enter the username (the default is `admin`).
3. Enter the password (the default is the last six characters of your system's serial number).

   The user name and password are case sensitive.

LED Status Indicators

The following topics list the LED behavior for your system. The tables list each LED indicator and its associated status.

Poly Studio G62 LED behavior

Use the LED on the front left corner of the Poly Studio G62 system to get information on the state of your system.

Table 2-20 Poly Studio G62 LED Behavior

Indicator	Status
Blinking white	Powering on
Solid white	Powered on
Solid green	In a call
Blinking amber	Update in progress
Solid amber	Sleeping
Blinking red	Error preventing normal operations
Solid red	Muted microphone

LED Status Indicators for the Poly G7500 System

Use the LED on the front right corner of the codec to get information on the state of your system.

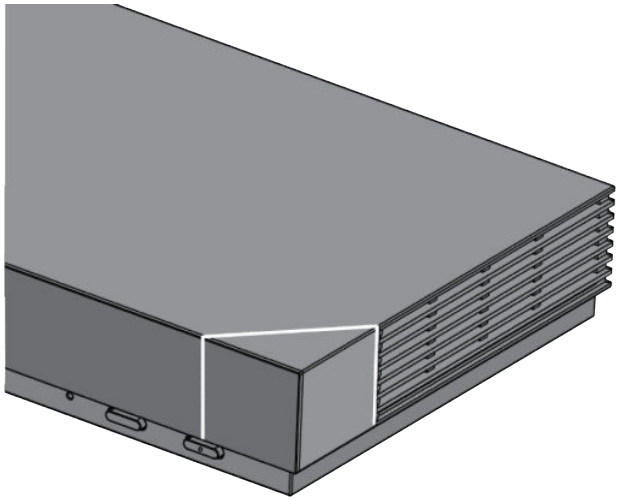

Table 2-21 Poly G7500 System LED Status Indicators

Indicator	Status
Blinking white	Powering on

Table 2-21 Poly G7500 System LED Status Indicators (continued)

Indicator	Status
Solid white	Working normally
Solid green	In a call
Blinking amber	Update in progress.
Solid amber	Sleeping
Blinking red	Error preventing normal operation
Solid red	Muted microphone

LED status indicators for the Poly Studio X72 and Poly Studio X70 systems

Use the LED on the right side of the system to help you understand the system's behaviors.

Table 2-22 Poly Studio X72 and Poly Studio X70 LED Indicators and Status

Indicator	Status
Solid white	Device is idle and standing by
Pulsing white	Boot initiation in progress
Pulsing amber	Firmware update or factor restore in progress
Blinking blue and white	Bluetooth pairing
Solid blue	Bluetooth paired
Solid green	Active call in progress
Solid red	Audio mute

LED Status Indicators for the Poly Studio X52 System

Use the LED on the right side of the system to help you understand the system's behaviors.

Table 2-23 Poly Studio X52 LED Indicators and Status

Indicator	Status
Off	System powered off
Off	System in sleep mode
Solid white	System is idle and standing by
Pulsing white	Boot initiation in progress
Pulsing amber	Firmware update or factor restore in progress
Blinking blue and white	Bluetooth pairing
Solid blue	Bluetooth paired
Solid green	Active call in progress
Solid red	Audio is muted

LED Status Indicators for Poly Studio X50 and Poly Studio X30 Systems

The system provides an LED light bar above the camera to help you understand the system's behaviors.

Table 2-24 Poly Studio X50 and Studio X30 LED Indicators and Status

Indicator	Position	Status
Solid white	All	Boot initialization in progress
Blinking blue	Twelve in the middle	Bluetooth in discover
Solid blue for 3 seconds	All	Bluetooth paired
Blinking green	All	Incoming call
Solid green	All	Outgoing call
Solid green	Four to eight (when in the middle), indicating the tracked speaker or the direction of the camera	Working The lights are green with supported applications in the following cases: • Tracking people in group framing and speaker tracking mode • Indicating the direction of the camera that you customize in pan-tilt-zoom (PTZ) mode
Solid amber	Twelve in the middle	Standing by System in sleep mode with no active video output
Pulsing red	Twelve in the middle	Call on hold
Pulsing green	Twelve in the middle	Call on hold (by far site)
Solid white for 3 seconds	Twelve in the middle	Saving a preset
Solid red	All	Muted microphone
Solid red	Four in the middle	Muted camera Muted microphone LEDs take precedence over camera mute LEDs
Pulsing amber	All	Firmware update in progress
Blinking red	All	Error preventing normal operation
Blinking amber	Twelve alternating	In a POST sequence, at least one test results in a warning error. The system continues to blink amber but initializes after the sequence is complete if no severe errors occur.
Blinking red	Twelve alternating	In a POST sequence, at least one test results in a severe error. The system continues to blink red and doesn't start up.

LED Status Indicators for the Poly Studio E70 Camera

The camera provides LED indicators on the front and right side of the camera to help you understand the camera's behaviors when connected to a Poly Studio G62, Poly G7500, or Poly Studio X system.

Table 2-25 Poly Studio E70 Camera System LED Status Indicators

Color and Pattern	Status
Pulsing white	Boot initialization is in progress
Solid white (50% brightness)	Powered on but disconnected from video system Sleep mode
Solid white (100% brightness)	Powered on and connected to the video system
Solid green	In a call or the camera is active
Pulsing amber	Firmware update or factory reset in progress
Flashing blue	Camera is IP pairing NOTE: If LED continues to flash blue, unplug and then replug the Poly Studio E70 camera.

Poly Studio E60 LED indicators

Your device provides two LED status indicators below the camera to help you understand the device's behaviors. The **Power** LED is white and the **Standby** LED is orange.

The following table lists the LED status details.

Table 2-26 Poly Studio E60 LED behaviors

Standby LED behavior	Power LED behavior	Device status
No color	No color	Device is powered off Camera faces the wall
No color	Flashing white	Device is starting up Camera faces the wall
No color	Solid white	Device is powered on and awake Camera faces the room
Solid orange	No color	Device is in standby mode Camera faces the wall
Flashing orange	No color	Firmware is updating Camera faces the wall
No color	Flashing white	Camera is pairing with a video conferencing system Camera faces the room

3 Setting Up the System

See the setup sheets applicable to your system and its peripheral devices, including cameras, monitors, microphones, and controllers.

Required components

Your system requires the following components to function properly.

- The supplied system power adapter

  For Poly Studio G62 systems, use a PoE+ class 4 PoE injector or Ethernet switch.
- An active network connection
- A monitor connected to HDMI port 1
- A system controller such as a Poly TC10, Poly TC8, remote control, or touch monitor

Set up your system using the system web interface

To set up your system, use the provided cables to connect the system to your network, a monitor, and power. By default, the system is set to Poly Video mode.

NOTE: Before powering on your system, connect a monitor, connect the system to your network, and connect any USB peripherals.

To use your system in a third party provider mode, such as Teams Rooms, Zoom Rooms, or Google Meet, you'll need an account and license per the provider requirements.

1. Connect the system to a monitor using the supplied HDMI cable.

   a. To connect one monitor, use the HDMI 1 port on the system.

   b. Connect the HDMI cable to HDMI port 1 on the monitor.
2. Connect the system Ethernet port to your network using the supplied Ethernet cable.
3. Power the system using the power supply that shipped with your system.

   On Poly Studio G62 systems, connect the system LAN PoE port to a PoE+ class 4 Ethernet switch or PoE+ class 4 PoE injector.

   Connect the Ethernet switch or PoE injector to your network.

4. When the system powers on, review the out-of-box information on the monitor. Take note of the system IP address and default user name and password which you'll need to complete setup using the system web interface.

5. Connect the Poly TC10 or Poly TC8 touch controller to a PoE enabled Ethernet port connected to your network.

6. **NOTE:** Update the touch controller to Poly TCOS 6.0 software if prompted during the out-of-box experience to avoid sync issues when pairing with the Poly G7500 or Poly Studio X video bar.

   The Poly TC10 or Poly TC8 touch controller out-of-box experience provides a guided set up for the entire Poly video system.

Default System Configuration

The default configuration of a Poly video system depends on the supported features included with the system's initial software version.

The default configuration for Poly Studio G62, Poly G7500, and Poly Studio X systems align as much as supported features allow.

Updating the system software to a version that supports a new feature doesn't automatically enable the new feature even if the feature is enabled by default on other systems.

When a VideoOS release introduces a new feature, you can update the configuration using one of the following methods:

- Update the setting manually
- Provision the system with the new setting enabled
- Perform a system restart

Completing Initial System Setup

When you power on the system for the first time (or after a system reset or factory restore), you must complete the system setup process.

This process involves the system contacting the Poly Zero Touch Onboarding (ZTO) server to determine its mode of operation: Poly Video Mode or Partner Mode.

NOTE:

- During initial setup, you must have a DHCP server in your environment to ensure the system gets an IP address. (You can configure the system with a static IP address later if needed.)
- Configure your firewall, web proxy, or both so that the system can communicate with the following services on port 443:
  - ZTO (`zto.poly.com`)
  - Poly Lens (`lens.poly.com`)
  - Software download site
    VideoOS 3.13.1 and prior: `downloads.polycom.com`

    VideoOS 3.14.0 and later: `swupdate.lens.poly.com`
- You must have an NTP server on your network for the system to connect with the ZTO service.
- Your conferencing application may require a separate license or subscription for call-related features. Contact your conferencing partner for information.

If the system isn't connected to a valid network at startup, it prompts you to connect to Ethernet or configure Wi-Fi.

NOTE: Only Zoom Rooms and Microsoft Teams support a Wi-Fi connection as the primary network. If you change to an unsupported conferencing application, a message displays indicating you must connect to the Ethernet.

After initial network setup, the system boots directly into a conferencing application. If the ZTO specified conferencing application isn't available in the current software, the system performs a software update. If the specified conferencing application isn't available after the update, the system defaults to Poly Video Mode. To change the conferencing application, go to the system web interface **Provider** section and select an option.

Required Steps Following Initial System Setup

After going through the system setup process, you also must manually configure or provision the following system settings for an optimal deployment and user experience:

- **Local administrator password**: For security reasons, don't use the default password.
- **Country**: If you use the default country setting, the system's Wi-Fi settings may not be optimal for your country or region.
- **Timezone**: Depending on the system location, using the default timezone setting may display the incorrect time on the system (including for scheduled calendar events).

Complete setup with the system web interface

To finish setting up your system, manually configure the system's local administrator password, country, and timezone.

After completing setup in the system web interface, you can pair a Poly TC10 or TC8 touch controller.

NOTE: To avoid power frequency issues with your system, choose a location.

1. Power on the system and follow the onscreen instructions.
2. Log in to the system web interface.
3. Go to **Security** > **Local Accounts** to change the local administrator password from the default value (the last six characters of your system's serial number).
4. Go to **General Settings** > **My Information** > **Location** to specify the country where your system is located.

   Your system typically defaults to the correct power-line frequency based on the video standard used in the country where it's located. To avoid power frequency issues with your system, choose a location.
5. Go to **General Settings** > **Date and Time** to set the timezone for your system.
6. Connect your TC10 or TC8 to a PoE powered Ethernet port connected to the same sub net as your system.
7. In the system web interface, go to **General Settings** > **Device Management**.
8. Under **Available Devices**, find the device by its MAC address such as **00e0db4cf0be** and select **Pair**.

   If paired successfully, the device displays under **Connected Devices** with a **Connected** status. If a device shows a **Disconnected** status, the pairing wasn't successful.

Initial system setup is complete. You can start using the system.

Complete Setup with Provisioning

To finish setting up your system, provision the system's local administrator password, country, and timezone.

Make sure to configure your provisioning server (for example, Poly Clariti Manager) ahead of time so that it recognizes and works with your endpoint.

1. Power on the system and follow the onscreen instructions.
2. Log in to the system web interface and go to **Servers** > **Provisioning Server** to register the system with your provisioning service.
3. In your provisioning template configuration file, set the following parameters:

   See the *Poly VideoOS Parameter Reference Guide* on the Poly Documentation Library for detailed descriptions about configuration parameters and their permitted values.

   - `sec.auth.admin.password`
   - `device.local.country`

- `device.local.timezone`

The provisioning service automatically configures these settings on your system.

Initial system setup is complete. You can start using the system.

Registering the System with Poly Lens

Poly Lens provides cloud-based management and insights for your system.

Register your system with Poly Lens during system setup or on the Poly Lens registration page. For more information on onboarding your system to Poly Lens, see Poly Lens Help.

Register the System with Poly Lens During System Setup

Register your system with Poly Lens during system during system setup.

1. When prompted to register with Poly Lens, do one of the following:
   - Scan the registration QR code with your mobile device.
   - Enter the registration URL in a browser.
   - Select the registration link in the system web interface.
2. Follow the instructions to finish registering your system.

Your system remains registered with Poly Lens even after a reset or factory restore.

Register the System with Poly Lens Post Setup

If you don't register during setup, you can do so on the Poly Lens registration page.

1. For instructions to register your system, go to Poly Lens Online Help Onboarding.
2. Review the instructions and go to Poly Lens to register your system.

Change the Conferencing Partner Application

When you change the conferencing provider, the system retains previously configured settings. It also updates the provider setting for the Zero Touch Onboarding (ZTO) profile associated with your system.

1. In the system web interface, go to **General Settings** > **Provider**.
2. Select the provider you want to change to.
3. Select **Save**, then select **Restart**.

   The system restarts and launches the selected conferencing provider application.

Managing Peripheral Devices

You can pair, monitor, and unpair the devices connected to your system in the system web interface.

The system can support up to five Poly TC8 devices simultaneously.

Pairing IP Devices on the Link-Local Network (LLN)

Connect IP devices to the Poly Studio G62 or Poly G7500 link-local network (LLN) port.

NOTE: The Poly Studio G62 includes one LLN port. The Poly Studio G62 LLN port doesn't provider power to IP devices. A PoE Ethernet switch or PoE injector is required to connect and power multiple IP devices to the Poly Studio G62 LLN port.

The Studio X70, Studio X50, Studio X52, and Studio X30 systems don't support LLN connections.

You can pair the following devices to your Poly Studio G62, or Poly G7500 system with an LLN connection:

- Poly IP Table Microphone
- Poly IP Ceiling Microphone

While not recommended, you can turn off automatic pairing and manually pair devices using the system web interface.

Connecting IP peripherals to the Poly Studio G62 LLN port

Connect Poly IP microphones and Poly IP cameras to your Poly Studio G62 system link-local network (LLN) port.

NOTE: For supported peripherals and configurations, see the *Poly VideoOS Release Notes*.

When connecting IP devices to the Poly Studio G62 system LLN port, observe the following:

- The Poly Studio G62 system LLN port provides a secure connection for audio and video IP devices such as Poly IP microphones and a Poly Studio E70 camera.

  The Poly Studio G62 LLN port doesn't provide power to connected peripherals.

- To power multiple IP peripherals connected to the Poly Studio G62 system LLN port, use a supported A/V Ethernet switch such as a Netgear A/V Line M4250 GSM4210PD.

  If you're connecting one IP peripheral, you can use a PoE injector rated for the peripheral you're connecting.

- The LLN port doesn't provide network access.

  Don't connect IP devices that require network access to the LLN port. Devices that require network access include Poly TC10, Poly TC8, and Poly Trio C60.

- To connect IP peripherals, use a CAT5e, CAT6, or CAT7 direct STP Ethernet cable. The cable can be up to 91 m (300 ft) in length.

Using modular room LLN switches

Manually connect modular room IP peripherals to Poly Studio G62 systems using a modular room link-local network (LLN) switch.

NOTE: Poly G7500 doesn't support connecting a network switch to the LLN ports. Use the three LLN ports to connect up to three IP peripherals on Poly G7500 systems.

Use the following guidelines when connecting IP peripherals to a Poly Studio G62 system:

- Use the Netgear ProAV GSM4210PD to connect up to eight PoE+ 30 W powered peripherals.
- Other switches and configurations are not supported and may suffer audio and content issues as a result.
- If your laptop doesn't have built-in Ethernet port, connect a dongle or docking station to your laptop.

Configure the network switch

Manually configure your modular room network switch to ensure a stable experience with Poly modular room peripherals.

Make sure you have the following equipment:

- Laptop with an Ethernet port
- Ethernet patch cable
- Netgear ProAV M4250-9G1F-PoE+ (GSM4210PD) network switch

NOTE: Automatic network switch configuration isn’t supported in this release.

NOTE: Ignore Netgear instructions on setting up your switch.

1. On your computer, go to https://lens.poly.com.
2. Sign in to Poly Lens Cloud and go to **Manage** > **Software Versions**.
3. Search for **Modular Room Switch**.
4. Download the file to your computer and unzip the file contents.
5. Turn on the network switch and connect the Ethernet patch cable to your laptop and the port labeled OOB on the back of the switch.
6. Configure the following settings for your computer's Ethernet interface:
   - Static IP address: 192.168.0.200
   - Subnet mask: 255.255.255.0
   - Leave the default gateway blank
7. Open a Command Prompt (Windows) or Terminal (Mac) and create a continuous ping to 192.168.0.239.
   - Windows: `ping 192.168.0.239 -t`
   - Mac: `ping 192.168.0.239`

8. When the ping replies start responding, open a web browser and go to http://192.168.0.239.

   The ping replies may take up to three minutes.

9. Under **Login**, enter `admin` - leave the password field blank.

10. When prompted, set the password to `Poly!4567`.

11. Select **AV UI Login**.

12. On the left sidebar, select **Configure** > **Maintenance** > **Firmware Update**.

13. Browse to the location of your extracted files, select the file named `M4250L-v13.0.4.19.stk` and select **Upload**.

    After a few minutes, a dialog appears stating that the upload was successful.

14. Select **Reboot Now**.

    Allow four minutes for this process to complete.

15. Refresh the web browser, and select **OK** on the dialog stating that the account login timed out.

16. Sign in using your credentials, and select **AV UI Login**.

17. Select **Maintenance** under the **Configuration** section.

18. In the **Configuration Management** section, select **Browse file** and click in the blank space.

    A file web browser opens.

19. Browse to the downloaded files, and select the file labeled `Poly-MR-16.cfg` and select **Upload**.

20. Once the progress bar turns green and reaches one hundred percent, select **Restore Now**.

21. On the top-right corner of the page, select **Reboot**.

22. When prompted to save the configuration settings, select **No**.

    Allow four minutes for this process to complete.

23. Refresh the web browser, and select **OK** on the dialog stating that the account login timed out.

24. Sign in using your credentials, and select **AV UI Login**.

25. Go to **Device Details** and verify that the firmware version is `13.0.4.19`.

26. Under **Configured Profiles**, verify that there's a Poly system name beginning with `Poly-MR`.

27. Once complete, you can close the web browser and disconnect the Ethernet cable connected to your computer and the switch.

Connect modular room IP peripherals to the Poly Studio G62 LLN port using a network switch

Connect Poly modular room peripherals to a Poly Studio G62 system using a supported network switch to ensure a stable experience.

1. Connect the Ethernet patch cable to port 9 on the Netgear ProAV M4250-9G1F-PoE+ (GSM4210PD) switch.

2. Connect the cable to the left RJ-45 port (labeled **LLN**) on the back of the Poly Studio G62 system.

3. Connect your Poly modular room peripherals to ports 1 through 8 on the switch.

Automatically Pair an IP Device

By default, IP devices automatically pair when connected to a system LLN port. For example, when you plug in a Polycom IP Table Microphone to the back of the system, it's ready to use.

- Connect the device to an **LLN** port on the back of your system.

  If paired successfully, the device displays under **Connected Devices** with a **Connected** status. If a device shows a **Disconnected** status, this indicates that pairing wasn't successful.

Disable Automatic Pairing

You can disable automatic pairing with your system's link-local network (LLN) connections.

If you disable automatic pairing, you must manually pair a device in the system web interface to use the device.

1. In the system web interface, go to **General Settings** > **Device Management**.

2. Clear the **Enable New Device Auto-Pairing** check box.

Manually Pair an IP Device

If you turn off automatic pairing of link-local network (LLN) connections, you must manually pair an IP device to use it with your system.

Know the MAC address of the device you're pairing.

1. Connect the device to an **LLN** port on the back of your system.

2. In the system web interface, go to **General Settings** > **Device Management**.

3. Under **Available Devices**, find the device by its MAC address (for example, **00e0db4cf0be**) and select **Pair**.

   If paired successfully, the device displays under **Connected Devices** with a **Connected** status. If a device shows a **Disconnected** status, this indicates that pairing wasn't successful.

Pairing IP Devices on the Local Area Network (LAN)

Supported IP devices can pair to your video system over your primary local area network (LAN).

Pairing a Poly Trio C60 speakerphone to the system

You can use a Poly Trio speakerphone as a controller and audio device with a Poly Studio G62, Poly G7500, Poly Studio G62, and Poly Studio X series system.

See your system's latest *Poly VideoOS Release Notes* for supported Poly Trio models.

You can connect up to four Poly Trio speakerphones to your system for use as an audio device.

NOTE: You can't use a Poly Trio speakerphone if your system is connected to Wi-Fi as the primary network.

In Poly Video mode and Poly Device Mode, you can connect up to four Poly Trio speakerphones to your system for use as an audio device.

You pair the phone as an IP device over your primary network. When paired, from the video system web interface you can configure audio to play from the phone speakers, Studio X Family system speakers, or monitors connected to the video system. The Poly Trio microphones are always on.

For information on pairing a Poly Trio speakerphone to your system, see the *Poly Video Mode Administrator Guide* or the *Poly Partner Mode Administrator Guide* at https://www.docs.poly.com.

Configure a Poly Trio speakerphone for Pairing

To pair with a video system, you must configure your Poly Trio speakerphone base profile and device role.

1. On the Poly Trio speakerphone local interface, go to **Settings** > **Advanced** > **Administration Settings** > **Network Configuration**.
2. Set the **Base Profile** to **Generic**.
3. After the phone restarts, go to **Settings** > **Advanced** > **Networked Devices**.
4. Set **Networked Device Role** to **Device**.

   The system automatically restarts.

Pair an IP Device on the Primary Network

Some devices connected to your primary network can pair with your video system. For example, this feature enables you to pair a Poly TC10 or TC8 without a physical connection to the video system.

NOTE: Pairing IP audio devices and cameras over the primary network isn't supported.

To pair, the device must be on the same subnet as the video system and the following network components must be unblocked:

- Multicast address 224.0.0.200
- TCP port 18888
- UDP port 2000

Know the MAC address of the device you're pairing.

A device may pair automatically after connecting to the network. However, you may need to manually pair a device in the following situations:

- The device doesn't automatically pair during setup with the system you purchased.
- You want to pair the device with a different system.

- You want to pair multiple similar devices (for example, to control the system with more than one Poly TC8 or TC10 device).

NOTE: The **Enable New Device Auto-Pairing** setting applies only to link-local network (LLN) devices; not devices connected to the primary network.

1. Connect the device you want to pair to an Ethernet port in the room.
2. In the system web interface, go to **General Settings** > **Device Management**.
3. Under **Available Devices**, find the device by its MAC address (for example, **00e0db4cf0be**) and select **Pair**.

   If paired successfully, the device displays under **Connected Devices** with a **Connected** status. If a device shows a **Disconnected** status, this indicates that pairing wasn't successful.

If pairing isn't successful, check the network connection, the configuration of your device, and the system you're pairing with.

Unpair an IP Device

You must unpair an IP device if you no longer want to use it with a particular video system.

Don't unpair devices if you plan to use them with the same system. For example, if you move your video-conferencing equipment to another room, just disconnect and reconnect the devices in the new location.

NOTE: If you unpair a link-local network (LLN) device, it won't automatically pair again with the same system.

1. In the system web interface, go to **General Settings** > **Device Management**.
2. Under **Connected Devices**, find the device by its MAC address (for example, **00e0db4cf0be**) and select **Unpair**.

   The unpaired device moves from **Connected Devices** to **Available Devices** (which shows discovered devices you can pair with the system).

Connect a USB Device

You can use some devices, such as a Windows or Mac laptop, with a USB connection to your video system. See the latest *Release Notes* for supported USB devices.

NOTE: Poly Studio G62 systems are compatible with the StarTech ST4300USBM Mountable 4-Port Industrial USB Hub expanding the available USB Type-A ports from two to five.

- Connect the device to a **USB** port on the back of your system.

Poly Bluetooth Remote Control

You can use the Poly Bluetooth Remote Control with your system.

Use the system web interface to perform the following tasks:

- Configure a remote control's button behavior.

- Pair and unpair a remote control.

NOTE: The remote control included with your G7500 system purchase is paired and ready to use without any extra setup.

- View the remote control name, pairing status, and battery level.

Configure Remote Control Behavior

You can customize how the remote control paired to your system behaves.

1. In the system web interface, go to **General Settings** > **System Settings**.
2. Configure the following settings:

Table 3-1

Setting	Description
Keypad Audio Confirmation	Specifies whether to play a voice confirmation of numbers selected with the remote control or keypad.
Numeric Keypad Function While In a Call	Specifies whether pressing number buttons on the remote control or keypad moves the camera to presets or generates touch tones (DTMF tones). If you set this option to **Presets**, you can generate DTMF tones by pressing the # key on the remote control while in a call.
#/@ Button function	Specifies the behavior of the **#** button on the remote control. • **#, then @**: Pressing the # button once displays the hash symbol. Pressing the # button twice quickly displays the @ symbol. • **@, then #**: Pressing the # button once displays the @ symbol. Pressing the # button twice quickly displays the # symbol.
*/. Button function	Specifies the behavior of the ***** button on the remote control: • *** then .**: Pressing the * button once displays the * symbol. Pressing the * button twice quickly displays a period. • **. then ***: Pressing the * button once displays a period. Pressing the * button twice quickly displays the * symbol.

3. Select **Save**.

Pair a Bluetooth Remote Control

In most cases, you must pair the Bluetooth remote control after setting up your system. To use a different remote control, you must pair it with the system.

The system doesn't support multiple remote controls. You can pair only one at a time.

NOTE: Only the Poly G7500 system has a dedicated Bluetooth pairing button.

1. Do one of the following:
   - In the system web interface, go to **General Settings** > **Remote Control** and select **Start Discovery Mode**.

- On the front of the G7500 system, press the **Bluetooth** button.

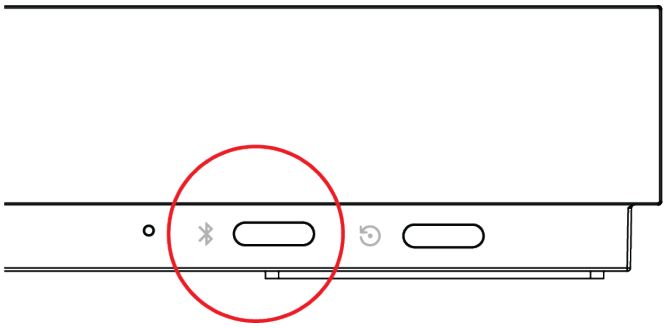

.

2. On your remote control, press **Mute** for seven seconds.

   In Poly Video Mode, the screen displays either a successful or unsuccessful pairing notification. In Partner Mode, the blue LED indicator stops blinking blue and returns to white.

3. Depending on the pairing result, do one of the following:

   - **Successful pairing**: The remote control is ready to use. You can view the remote control name, battery level, and status of the device in the system web interface.
   - **Unsuccessful pairing**: Try the following solutions:
     - Remove the batteries from the remote control and reinsert after 5 seconds.
     - Move your remote control closer to the system than other remote controls and try to pair again.

Unpair a Remote Control

You can unpair a remote control if you no longer want to use it with your system.

1. In the system web interface, go to **Remote Control**.
2. Select **Unpair Remote**.

   The remote control unpairs.

Poly IR Receiver and IR Remote

Connect a Poly IR receiver to your Poly Studio G62, Poly G7500, or Poly Studio X system to control the system with a Poly IR remote.

For information on setting up the Poly IR receiver, see the *Poly IR Receiver Quick Start Guide* on the HP Support site.

Poly IR Remote Control Button Functions

When you connect a Poly IR receiver to your G7500 or Studio X system, you can use the Poly IR remote control to navigate your system.

The following illustration and table show the buttons and functionality of the Poly IR remote control.

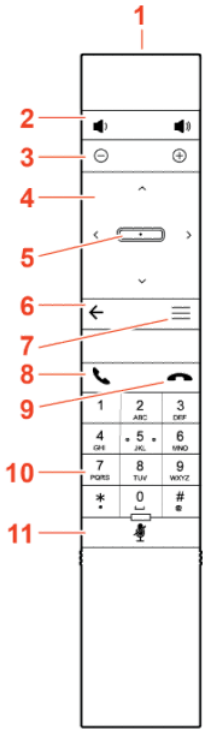

Table 3-2 IR Remote Button Functions

Item	Description	Function
1	IR LED	Sends IR signals to the IR receiver
2	Volume	Increase or decrease the volume
3	Camera zoom	Zoom the camera in or out
4	Navigation controls	Navigate the user interface.
5	Select	Select an item on the user interface or adjust a toggle
6	Back arrow	Return to the previous screen
7	Menu	In Poly Video mode only, show or hide the settings and camera controls
8	Call	Display the calls screen or answer an incoming call
9	End call	End an active call or reject an incoming call
10	Dialpad	Dial a number
11	Mute	Mute or unmute the system microphones

IP Microphones

You can use a combination of IP-based Poly table and ceiling microphones with your Poly Studio G62 or Poly G7500 system. These microphones also support Polycom Acoustic Fence technology.

NOTE: The Poly Studio G62 includes one LLN port. The Poly Studio G62 LLN port doesn't provider power to IP devices. A PoE Ethernet switch or PoE injector is required to connect and power multiple IP devices to the Poly Studio G62 LLN port.

You can connect up to three of the following microphones to your system:

- Poly IP Table Microphone
- Poly IP Ceiling Microphone

Poly IP Table Microphone ports

The following illustration and table explain the ports on the table microphone.

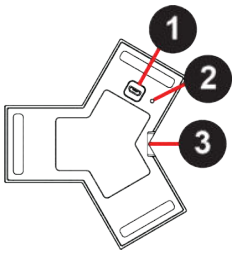

Table 3-3 Poly IP Table Microphone port descriptions

Ref. Number	Port Description
1	Micro-USB debugging port
2	Factory restore pinhole
3	Link-local network (LLN) connection

Poly IP Ceiling Microphone Ports

The following illustration and table explain the ports on the ceiling microphone.

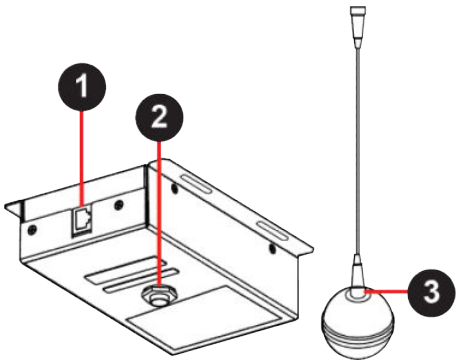

Table 3-4 Poly IP Table Microphone Port Descriptions

Ref. Number	Port Description
1	Link-local network (LLN) connection

Table 3-4 Poly IP Table Microphone Port Descriptions (continued)

Ref. Number	Port Description
2	Microphone cable connector
3	Microphone cable connector

LED Status Indicators for IP Microphones

Use the LED on the IP table and ceiling microphones to get information on the state of each device.

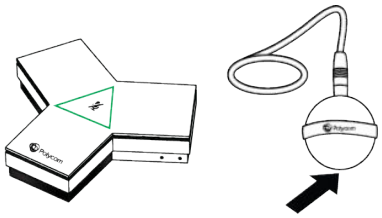

Table 3-5 IP Microphone LED Status Indicators

Indicator	Status
Solid then blinking white	Powering on
Solid red	Muted microphone To avoid distraction, the ceiling microphone doesn't display red when muted.
Solid green	In a call and microphone not muted To avoid distraction, the ceiling microphone doesn't display green in a call.
LED is off	Out of a call and microphone not muted
Alternating blinking and solid amber	Update in progress
Blinking amber	Factory restore in progress
Blinking blue	Ready to pair
Solid blue	Paired successfully

Poly Microphone IP Adapter

The Poly Microphone IP Adapter lets you connect non-IP Polycom audio devices with your system. For example, if your Polycom microphone uses a Walta-Walta cable, you can connect it to your system through the microphone adapter.

Poly Studio G62 and Poly Studio X systems don't support the microphone adapter.

See the latest video system *Release Notes* for which audio devices work with the microphone adapter.

NOTE: You can't use the microphone adapter with IP microphones connected to your system.

Microphone Adapter Ports

The following illustration and table explain the ports on the microphone adapter.

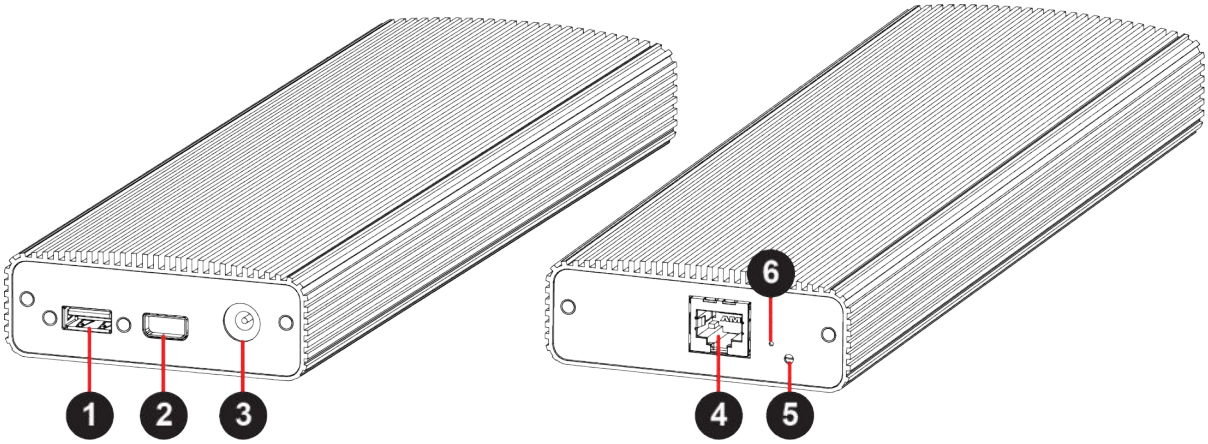

Table 3-6 Microphone Adapter Port Descriptions

Ref. Number	Port Description
1	USB 2.0 debugging port
2	Polycom microphone Walta-Walta connector
3	Power
4	Link-local network (LLN) connection
5	LED status indicator
6	Factory restore pinhole

LED Status Indicators for the Microphone Adapter

Use the LED to get information on the state of your microphone adapter.

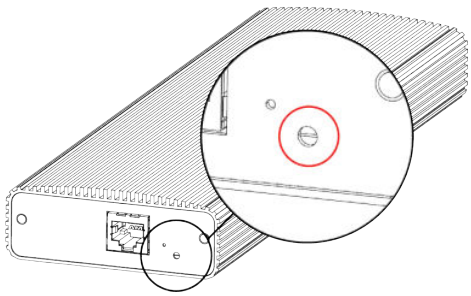

Table 3-7 Microphone Adapter LED Status Indicators

Indicator	Status
Blinking white	Powering on
Solid white	On
Blinking blue	Ready to pair
Solid blue	Paired successfully
Blinking green and blue	Update in progress
	Factory restore in progress

Powering the Microphone Adapter On and Off

When plugged in to a power source, the microphone adapter is on. The system doesn't have a power button, so you must unplug the power cable to power it off.

Don't restart or power off the system during maintenance activities (for example, while a software update is in progress).

Connecting Microphones to the Microphone Adapter

To connect a non-IP Polycom microphone to the microphone adapter, use a RealPresence Group Series microphone array Walta-Walta cable. You can then daisy chain up to three additional microphones to the one directly connected to the adapter. A maximum of four microphones are supported.

For more information, see the *Polycom Microphone IP Adapter Setup Sheet*.

Move a Microphone Adapter to Another Location

You might need to move your microphone adapter from a Poly G7500 system in one room to a Poly G7500 system in another room.

1. In the system web interface, unpair the microphone adapter from the system.
2. Move the microphone adapter to the new location.
3. Use the system web interface to pair the microphone adapter to the new system.

Connecting a Poly Studio E70 to a Poly Studio G62 or Poly G7500 system

You can connect a Poly Studio E70 camera to a Poly G7500 or Poly Studio G62 system as a USB or IP camera.

Connecting a Poly Studio E70 to a Poly Studio G62 or Poly G7500 as an IP camera

- You must use a link-local network (LLN) switch to connect multiple IP devices.
- Mixing IP LLN and USB-connected Poly Studio E70 cameras isn't supported.
- You can only connect a single Poly Studio E70 camera via IP to a Poly G7500 system with any provider.
- Poly VideoOS 4.3.0 supports connecting three Poly Studio E70 cameras to a Poly Studio G62. The Poly Studio E70 must be on 1.10.0 or later.
- Poly VideoOS 4.2.0 supports connecting one Poly Studio E70 to a Poly Studio G62 or Poly G7500 as an IP camera. The Poly Studio E70 must be on 1.8.0 or later.
- Zoom Rooms Smart Gallery isn't supported.
- Connect the Poly Studio E70 Ethernet port to a Poly G7500 LLN port to provide power and data connectivity.

  Use a CAT5e, CAT6, or CAT7 standards compliant Ethernet cable. The Ethernet connection supports distances up to 91 m (300 ft.).
- On a Poly Studio G62 system, connect the Poly Studio E70 to a PoE Ethernet switch or PoE injector to power the camera. Connect the Ethernet switch or PoE injector to the LLN port on the Poly Studio G62.

  Use a CAT5e, CAT6, or CAT7 standards compliant Ethernet cable. The Ethernet connection supports distances up to 91 m (300 ft.).
- To move the Poly Studio E70 to another system, or use it as a USB camera, you need to unpair it from the Poly Studio G62 or Poly G7500 using the system web interface.

Connecting a Poly Studio E70 to a Poly G7500 as a USB camera

- Poly VideoOS 4.2.0 supports connecting up to three Poly Studio E70s cameras to a Poly G7500 system via USB.
- On Poly Studio G62 systems, you can connect up to two Poly Studio E70 cameras using USB.
- For Microsoft Teams Rooms, Poly VideoOS 4.2.0 only supports connecting two Poly Studio E70 cameras to a Poly G7500 system via USB.
- Connect the Poly Studio E70 USB-C port to a Poly G7500 or Poly Studio G62 USB-A port.

  To power the Poly Studio E70 on a Poly G7500, connect the Poly Studio E70 Ethernet port to a Poly G7500 LLN port or connect a power adapter.

  To power the Poly Studio E70 on a Poly Studio G62, connect the Poly Studio E70 to a PoE Ethernet switch or a PoE injector. Alternatively, you can connect the Poly Studio E70 to power using the optional Poly Studio E70 power adapter.

The system automatically connects to the Poly Studio E70 and sets it as the primary camera.

- Disconnecting the USB cable will disconnect the Poly Studio E70 from the system. You don't need to access the system web interface to disconnect the camera from the system.

Switch a Studio E70 USB-connected camera to IP LLN connected

Change the connection for a Poly Studio E70 camera with a G7500 system from USB to IP LLN.

NOTE: Pairing Studio E70 as an IP LLN camera overrides the camera's USB connectivity and capabilities until you **Unpair** it.

NOTE: When you connect a Studio E70 to a G7500 over Ethernet, don't connect the USB cable.

1. Disconnect the USB cable from the Studio E70 and G7500.
2. Locate the three link-local network (LLN) ports on the G7500 system and connect the Ethernet cable to one of the available ports.

   You must use a CAT5e, CAT6, or CAT7 direct Ethernet cable. The cable can be up to 91 m (300 ft) in length.
3. Plug the Ethernet cable into the camera's Ethernet port.
4. In the system web interface, go to **General Settings** > **Device Management**.
5. Locate the camera in the **Connected Devices** list.
6. Select **Pair**.

The G7500 system reboots and synchronizes the Studio E70 camera.

Unpair a Studio E70 camera from a G7500 to use it as a USB camera

When you pair a Studio E70 to a G7500 as an IP LLN camera, you must unpair it to use it as a USB camera with the G7500 or another system.

The Studio E70 remains in IP LLN camera mode until you unpair it from the G7500 or factory reset the Studio E70.

1. In the system web interface, go to **General Settings** > **Device Management**.
2. Locate the camera in the **Connected Devices** list.
3. Select **Unpair**.

   The Studio E70 camera moves from **Connected Devices** to **Available Devices**.
4. If you're not using the Ethernet cable to power the Studio E70 camera, disconnect it from the G7500.
5. Connect the Studio E70 USB-C port to an available USB-A port on the G7500 using the supplied USB-C to USB-A cable.

   The Studio E70 becomes the active camera and displays under **Audio/Video** > **Video Inputs** in the system web interface.

The Studio E70 camera connects to the G7500 system as a USB camera and displays under **Video Inputs** in the G7500 system web interface.

Disable IP Camera Mode by Performing a Factory Reset on a Studio E70

If you can't unpair a Studio E70 from a G7500 system, factory reset the Studio E70 to disable IP camera mode.

1. Power off the Studio E70 camera by disconnecting the power source.
2. On the bottom of the Studio E70 camera, insert a straightened paper clip through the factory restore button pinhole.

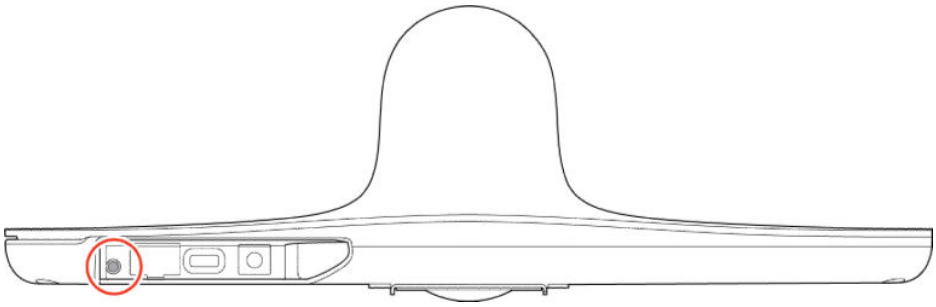

3. While holding the factory restore button, connect the Studio E70 camera to a power source.
4. When the Studio E70 LED indicator light turns amber, release the restore button.

The factory restore process completes when the LED indicator glows solid white. Once you factory restore the camera, you can connect the Studio E70 to a system using the USB cable.

Connect a Poly Studio E70 to a Poly G7500 System using a USB cable

Connect the Poly Studio E70 camera to a Poly G7500 system using a supported USB-C to USB-A cable.

For the best video conferencing experience, Poly highly recommends using the USB cable that comes with Poly Studio E70 to connect to your PC or device.

NOTE: The Poly Studio E70 microphones are for speaker tracking only.

NOTE: Hot plugging a USB camera isn't supported. Power off the system before connecting the camera.

1. To power on the Poly Studio E70, connect the Poly Studio E70 to an available LLN port on the Poly G7500.
2. Connect the Poly Studio E70 USB-C port to a USB-A port on the Poly G7500 using the supplied USB-C to USB-A cable.

   The Poly Studio E70 becomes the active camera and displays under **Audio/Video > Video Inputs** in the system web interface.

Connecting Poly Studio E60 to Poly G7500 or Poly Studio G62

You can connect a Poly Studio E60 camera to a Poly G7500 system as a USB camera.

On a Poly G7500 systems, you can connect up to three Poly Studio E60 cameras to a Poly G7500 system using USB.

On Poly Studio G62 systems, you can connect two Poly Studio E60 cameras to the codec or up to three using the StarTech ST4300USBM Mountable 4-Port Industrial USB Hub

Set up your Poly Studio E60 camera

Set up your Poly Studio E60 camera and initialize it to start using it.

1. Connect your Poly Studio E60 camera to the system using the provided USB 3.0 Type-B to USB 3.0 Type-A cable.

   IMPORTANT: Using a third-party USB Type-B to USB Type-A cable may affect device performance, or your device may not work at all.

2. Supply power to the camera using one of the following options:

   - Connect a network cable from the PoE+ port on the camera to an Ethernet port on your system.
   - Connect an optional power adapter from the 12 V DC power port on the rear panel of the camera to a power source.

   The **Power** LED on the front panel of the camera flashes white. The **Standby** LED glows solid orange.

The camera initializes. The camera head rotates to face the room. The power indicator LED glows solid white and the standby LED glows solid orange. When the camera stops moving, initialization is complete.

Poly Studio E60 becomes the active camera and displays under **Audio/Video** > **Video Inputs** in the system web interface.

Connecting a Poly Studio E60 to a Poly Studio G62 or a Poly G7500 as an IP LLN Camera

You can connect three Poly Studio E60 cameras to a Poly Studio G62 or one Poly Studio E70 camera to a Poly G7500 as an IP LLN camera.

Observe the following when connecting a Poly Studio E60 to a Poly G7500 as an IP LLN camera:

Provider Support

- Poly Studio E60 IP LLN connectivity is supported in Teams Rooms, Zoom Rooms, Poly Video Mode. Poly Studio E60 IP LLN connectivity is not supported in other provider modes.
- Teams Rooms supports connecting one IP LLN camera.
- You can't connect IP LLN and USB cameras simultaneously.

Configuration Notes

- Before switching your Poly Studio E60 from USB to IP LLN connectivity, update your system to Poly VideoOS 4.4.0 and the Poly Studio E60 camera to software version 1.1.3.6. Software version 1.1.3.6 is included as part of Poly VideoOS 4.4.0.
- To move the Poly Studio E60 to another system, or use it as a USB camera, use the system web interface to unpair it from the system.
- Poly G7500 supports one Poly Studio E60 when connected as an IP LLN camera in Teams Rooms, Zoom Rooms, and Poly Video Mode.
- Poly Studio G62 support connecting up to three Poly Studio E60 cameras as an IP LLN camera in Zoom Room and Poly Video Mode. In Teams Rooms mode, connecting one Poly Studio E60 using IP LLN is supported.
- Mixing IP LLN and USB cameras isn't supported. To connect multiple Poly Studio E60 cameras, use USB connectivity.

Connect a Poly Studio E60 with a Poly Studio G62 as an IP LLN camera

Use an Ethernet cable to connect a Poly Studio E60 to a Poly Studio G62 as an IP LLN camera.

- If the Poly Studio E60 is connected to the Poly Studio G62 with a USB cable, disconnect the USB cable.
- The Poly Studio G62 LLN port doesn't provide power. To provide power to the Poly Studio E60, use the Poly Studio E60 power supply, a PoE+ injector, or a **Netgear** ProAV M4250-9G1F-PoE+ (GSM4210PD) switch.

Poly Studio G62 supports connecting up to three Poly Studio E60 IP LLN cameras in the Zoom Rooms and Poly Video Mode.

Poly Studio G62 in Teams Rooms mode supports connecting one Poly Studio E60 IP LLN camera.

1. Locate the link-local network (LLN) port on the Poly Studio G62 system and connect the Ethernet cable to the port.

   You must use a CAT5e, CAT6, or CAT7 direct Ethernet cable. The cable can be up to 91 m (300 ft) in length.
2. Plug the Ethernet cable into the camera's Ethernet port.
3. In the system web interface, go to **General Settings** > **Device Management**.
4. Locate the camera in the **Available Devices** list.
5. Select **Pair**.
6. The Studio E60 camera is added to the **Connected Devices** list.

Connect a Poly Studio E60 with a Poly G7500 as an IP LLN camera

Use an Ethernet cable to connect a Poly Studio E60 to a Poly G7500 as an IP LLN camera.

- If the Poly Studio E60 is connected to the Poly G7500 with a USB cable, disconnect the USB cable.

- If the Poly Studio E60 is connected to a power supply, disconnect the power supply from the Poly Studio E60. When you connect the Poly Studio E60 to the Poly G7500, the Poly G7500 LLN port will provide power for the Poly Studio E60.

Poly Studio G7500 supports connecting one Poly Studio E60 IP LLN cameras in the Zoom Rooms, Teams Rooms, and Poly Video Mode.

1. Locate a link-local network (LLN) port on the Poly G7500 system and connect the Ethernet cable to the port.

   Use a CAT5e, CAT6, or CAT7 direct Ethernet cable. The cable can be up to 91 m (300 ft) in length.

2. Plug the Ethernet cable into the camera's Ethernet port.
3. In the system web interface, go to **General Settings** > **Device Management**.
4. Locate the camera in the **Available Devices** list.
5. Select **Pair**.
6. The Poly Studio E60 camera is added to the **Connected Devices** list.

4 Configuring General Settings

General settings include your system name, location, and language preferences.

Name the Device and Room

Name your system and assign it a room name.

The room name displays on call participants' screens.

1. In the system web interface, go to **General Settings** > **System Settings**.
2. Edit the **Device Name**, **Room Name**, or both.

   Table 4-1 Character Type and Maximum Characters for Device and Room Name

Field	Character Type	Maximum Characters
Device Name	All alphanumeric and special character formats (including foreign language characters)	40
Room Name	All alphanumeric and special character formats (including foreign language characters)	32

3. Select **Save**.

Provide Contact Information

Enter contact information for your system so that users know whom to call when they need assistance.

1. In the system web interface, go to **General Settings** > **My Information**.
2. Go to **Contact Information**.
3. Configure the following settings:
   - **Contact Person**
   - **Contact Number**
   - **Contact Email**
   - **Contact Fax**

- **Tech Support**: Specifies a second contact in case someone needs additional support.
- **Site**
- **Organization**
- **City**
- **State/Province**
- **Country**

4. Select **Save**.

Set the Date and Time

Change the date and time settings in the system web interface.

1. In the system web interface, go to **General Settings** > **Date and Time**.
2. Configure the following settings (your changes save automatically):

Table 4-2 Date and time settings

Setting	Description
Date Format	Specifies how the date displays.
Time Format	Specifies how the time displays.
Auto Adjust for Daylight Saving Time	When enabled, the system clock automatically adjusts for daylight saving time.
Time Zone	Specifies the time difference between GMT and your location.
Time Server	Specifies if you want to automatically or manually configure the system to use a time server. You can also select **Off** to manually enter the date and time.
Primary Time Server Address	Specifies the address of the primary time server your system uses when you set **Time Server** to **Manual**.
Secondary Time Server Address	Specifies the address of the time server your system uses when the **Primary Time Server Address** doesn't respond. This is an optional field.
Current Date and Current Time	If you set **Time Server** to **Manual** or **Auto**, the system doesn't display these settings. If you set **Time Server** to **Off**, you can configure **Current Date** and **Current Time**.

Set the System Location

Specify the country and country code where the system is located.

NOTE: To avoid power frequency issues with your system, choose a location.

1. In the system web interface, go to **General Settings** > **My Information**.
2. Go to **Location**.
3. Configure the following settings (your changes save automatically):

Table 4-3 Location settings

Setting	Description
Country	Specifies the country where the system is located. Changing the country automatically adjusts the country code associated with your system.
Country Code	Displays the country code associated with the system location.

Set the Local Interface Language

Change the language that users see on the system local interface.

1. In the system web interface, go to **General Settings**.
2. Select **System Language** and choose a language.

Configure Sleep Settings

Configure when you want your device to go to sleep after a period of inactivity. Sleep mode can help prevent monitor burn-in.

1. In the system web interface, go to **General Settings** > **System Settings**.
2. Configure the following settings:

Table 4-4 General Settings

Setting	Description
Time Before System Goes to Sleep	• Select how long the device can be idle before it goes to sleep. • Select **Off** to disable system sleep mode.

Table 4-4 General Settings (continued)

Setting	Description
Enable Mic Mute in Sleep Mode	Select the check box to mute your microphones when the system is in sleep mode. NOTE: When you enable **Enable Mic Mute in Sleep Mode**, microphones don't automatically unmute when the system wakes, you must manually unmute them. You can't unmute the system using any method including CLI or REST API commands while the system is sleeping.

3. Select **Save**.

Configure Out of Office Settings

Enable your system to enter sleep after three minutes during a time interval when the office is typically closed.

Configure **Out of Office Hours** to reduce the time the system is idle before it enters sleep mode outside your office hours. For example, if you set the **Sleep** timer to thirty minutes and you set officer hours, the system will enter sleep mode after three minutes after office hours.

Out of Office Hours applies to all seven days of the week, Sunday through Saturday.

1. In the system web interface, go to **General Settings** > **System Settings**.
2. Select the **Out of Office Hours** check box and configure the following settings:

Setting	Description
Start Time	When out-of-office hours begin
End Time	When out-of-office hours end

3. Select **Save**.

Change Studio X Series LED Bar Brightness

If you're sitting close to the system and monitor, bright LEDs can affect the video white balance, causing odd coloration of the video output.

1. In the system web interface, go to **General Settings** > **System Settings**.
2. Slide the **LED Bar Brightness** slider to the left to lower the brightness and to the right to increase the brightness.
3. Select **Save**.

Change the Conferencing Partner Application

When you change the conferencing provider, the system retains previously configured settings. It also updates the provider setting for the Zero Touch Onboarding (ZTO) profile associated with your system.

1. In the system web interface, go to **General Settings** > **Provider**.

2. Select the provider you want to change to.
3. Select **Save**, then select **Restart**.

   The system restarts and launches the selected conferencing provider application.

Device Mode

You can configure your system to allow access to Device Mode from the conferencing application or set Device Mode as a provider to lock the system in Device Mode.

Poly Device Mode enables you to use the system's camera, speaker, microphone, and connected monitors from your computer.

Once you connect the system to your computer with a USB cable, you can control the video system's camera and audio features using your computer's third-party conferencing application

Set the Conferencing Provider to Device Mode

Choosing Device Mode as your provider locks your system in Poly Device Mode. When you set the conferencing provider to Device Mode, the local interface displays only the Device Mode interface.

NOTE: Observe the following when using Device Mode as a provider:

- You must have a monitor connected to the system.
- Airplay and Miracast are disabled in the system web interface.
- Sleep and digital signage are not available.

1. In the system web interface, go to **General Settings** > **Provider**.
2. In the **Provider** drop-down menu, choose **Device Mode**.
3. Select **Save**, then select **Restart**.

The system restarts and launches Device Mode.

Connect a computer to the system to join meetings or place calls using the system as an audio and video peripheral.

Set the Device Mode Idle Timeout

Set the amount of time the system remains in Device Mode after you disconnect a computer from the system.

NOTE: This setting doesn't apply to systems in Device Mode as a provider mode.

1. In the system web interface, go to **General Settings** > **System Settings** > **Collaboration Tools** > **Device Mode Idle Timeout**.
2. Use the drop-down menu to select the time Device Mode remains open when no computer is connected to the system.

Disable Poly Device Mode

Disable Device Mode to stop the system from being used as an external camera, microphone, and speaker for a USB-connected laptop.

NOTE: This setting doesn't apply to systems in Device Mode as a provider mode.

Disabling Device Mode requires a system restart.

1. In the system web interface, go to **General Settings** > **System Settings** > **Collaboration Tools**.

2. Clear the **Enable Device Mode** check box and select **Save**.

Display a Button to Access Camera Controls in Device Mode

You can disable or enable the system to include a camera controls button on the Device Mode screen.

Introduced in VideoOS 4.1.0, a camera control button displays on the Device Mode screen. You can disable the button in the system web interface.

1. In the system web interface, go to **General Settings** > **System Settings** > **Collaboration Tools**.
2. To disable the camera control button, clear the **Show Camera Control Button** check box.

System Usage Data Collected by Poly

By default, your system sends usage data to Poly to help improve its products and services.

For information about the data that Poly collects, see the system privacy guide.

Send Usage Data to Poly

You can help Poly improve its products and services by allowing the collection of usage data from your system.

With your agreement, the system sends the following information to Poly Cloud Services and the Device Analytics service:

- Basic device information, including hardware and software versions
- Basic device configuration data
- Data and statistics related to device or feature usage
- Device health data, including CPU and memory usage

1. In the system web interface, go to **Servers** > **Cloud** > **Preferences**.
2. Click the link to read the “Terms and Conditions”.
3. Select the check box to agree to the data collection.

5 Using a Provisioning Service

Provisioning services, such as Poly Lens or Poly Clariti Manager, enable you to deploy enterprise-wide configurations to your systems.

You can use a provisioning service to perform the following actions with your system and some of its paired devices:

- Automatically configure settings
- Automatically update software

Remember the following when you register your system to a provisioning service:

- Provisioned settings are read-only in the system web interface. Settings that are dependent on provisioned values are read-only or unavailable.
- The system automatically checks for and runs software updates every time it restarts and at an interval set by the service.
- If a registered system fails to detect the service when it restarts or checks for updates, an alert displays on **System Status**.
- If the system loses registration with the service, it continues to use the most recent configuration it received.
- The system looks for provisioning options during initial system setup in the following order: Zero Touch Onboarding, Poly Lens, then DHCP. If the system doesn’t find provisioning information for an option, it automatically goes to the next one.

NOTE: To maintain call connection, you can't configure provisioning settings during a call.

For a list of available system parameters and their permitted values, see the Poly VideoOS Configuration Parameters Reference Guide.

Register the System with Poly Clariti Manager Provisioning Service

Before you can provision a system, you must register it with a provisioning service.

NOTE: Make sure to configure your provisioning server (for example, Poly Clariti Manager) ahead of time so that it recognizes and works with your endpoint.

For information on device support for Clariti Manager, see the products release notes.

For information on how to provision your system with Poly Clariti Manager, see the Poly Clariti Manager Administrator Guide.

1. In the system web interface, go to **Servers** > **Provisioning Server**.
2. Select **Enable Provisioning**.
3. Select **Load Discovered Information**.

   The registration fields update automatically if your system detects a provisioning server.
4. **Optional:** If your system didn't detect a provisioning server, complete the following fields (contact your network administrator for help):

Setting	Description
Authentication Type	The type of authentication the system uses to connect to the provisioning server.
Server Address	Address of the system running the provisioning service. The format is `https://<server>/ucservice` . For example, `https://video.myrpp.poly.com/ucservice` .
Domain Name	Domain for registering with the provisioning service. This option doesn't display if you select **Basic** as the authentication type.
User Name	User ID for registering with the provisioning service.
Password	Password for registering with the provisioning service.

5. Select **Save**.
6. Verify that **Registration Status** changes from **Pending** to **Registered**.

   It might take a minute or two for the status to change.

Download a Provisioning Template Configuration File

Template configuration files show how parameters are set on your Poly G7500, Poly Studio G62, and Poly Studio X series system. You can use this template to modify parameters and import the changes to your provisioning server.

If you're provisioning your system with a Poly Clariti Manager system, you can use the template to create a UC endpoint configuration profile to associate with your systems. For more information, see the Poly Clariti Manager Administrator Guide.

1. In the system web interface, go to **Servers** > **Provisioning Server**.
2. Select **Download Profile Template**.

   The template saves to your local device as a `.cfg` file.

Register the System with the Poly Lens Provisioning Service

Provision your system with Poly Lens to easily configure and manage your systems.

For information on how to provision your system with Poly Lens, see the Poly Lens Help Documentation.

1. In the system web interface, go to **Servers** > **Provisioning Server**.

2. Select **Enable Provisioning**.
3. In the **Authentication Type** field, select **Basic**.
4. **Optional:** If your system didn't detect a provisioning server, complete the following fields (contact your network administrator for help):

Setting	Description
Server Address	Address of the system running the provisioning service.
User Name	User ID for registering with the provisioning service.
Password	Password for registering with the provisioning service.

5. Select **Save**.
6. Verify that **Registration Status** changes from **Pending** to **Registered**.

   It might take a minute or two for the status to change.

Register the System Using DHCP Auto Discovery

You can use DHCP to automatically register your system to a provisioning service before initial system setup or after a system reset.

The system looks for option number 160 and 66 (in that order) in the response received from the DHCP server. The DHCP server should send address information that matches one of the address formats.

- Configure your DHCP server to send the username, password, and URL of your provisioning service in the following format:
  - For Poly Clariti Manager use `https://<shareduserID>:<sharedpassword>@<server>/ucservice`
    For example, `https://mySharedID:mySharedPW@video.example.com/ucservice`
  - For Poly Lens use `https://<ServerUser>:<ServerPassword>@<ServerAddressURL>`
    For example, `https://ServerUser:ServerPassword@txxxx.dm.lens.poly.com`, where xxxx are numeric values from 1 to 9.

6 Configuring Network Settings

Network settings include the system primary (wired LAN) and secondary (Wi-Fi) network configurations. You also can register your system with SIP and H.323 for calling.

NOTE: If you run scanning tools that interact with Poly systems, Poly recommends that you run these tools after business hours. Scanning tools may take bandwidth and resources from the system resulting in degraded performance.

Configuring Wired LAN Settings

You can set the wired LAN properties for your system.

Automatically Obtain IPv4 Address Settings

Your system by default gets its IP address information automatically. If this behavior is turned off, you can turn it back on.

You must have a DHCP server deployed in your environment.

1. In the system web interface, go to **Network** > **LAN Network** > **IP Addresses**.
2. For **IP Address**, select **Obtain IP address automatically**.

   Some of your IP address settings populate automatically and are read-only.
3. Select **Save**.

Manually Configure IPv4 Address Settings

You can manually specify the system's IPv4 address settings.

1. In the system web interface, go to **Network** > **LAN Network** > **IP Addresses**.
2. For **IP Address**, select **Enter IP address manually**.
3. Configure the following settings:

   Table 6-1 **IP settings**

Setting	Description
Your IP Address is	Specifies the system IP address.
Subnet Mask	Specifies the subnet mask assigned to your system.
Default Gateway	Specifies the default gateway assigned to your system.

4. Select **Save**.

Automatically Obtain IPv6 Address Settings

You can enable your system to use IPv6 addresses and get IP address information automatically.

You must have a DHCP server deployed in your environment.

⚠ **WARNING!** If your network environment only supports IPv6, you must manually configure a static IPv4 address. For example, manually configure the IPv4 IP address to 192.168.0.4.

1. In the system web interface, go to **Network** > **LAN Network** > **IP Addresses**.
2. Select the **Enable IPV6** checkbox.
3. For **IP Address**, select **Obtain IP address automatically**.
4. **Optional:** Select the **Enable SLAAC** checkbox to enable the system to use stateless address autoconfiguration (SLAAC) to automatically obtain IP address.

Manually Configure IPv6 Address Settings

You can manually configure the system's IPv6 address settings.

⚠ **WARNING!** If your network environment only supports IPv6, you must manually configure a static IPv4 address. For example, manually configure the IPv4 IP address to 192.168.0.4.

1. In the system web interface, go to **Network** > **LAN Network** > **IP Addresses**.
2. Select the **Enable IPV6** checkbox.
3. For **IP Address**, select **Enter IP address manually**.
4. Configure the following settings:

Setting	Description
Link-Local	Specifies the IPv6 address to use for local communication within the subnet.
Site-Local	Specifies the IPv6 address to use for communication within the site or organization.
Global Address	Specifies the IPv6 internet address.
Default Gateway	Specifies the default gateway assigned to your system.

5. Select **Save**.

Manually Assign a Host Name and Domain Name

You can manually enter the host name and domain name for your system. You also can modify these settings even if your network automatically assigns them.

1. In the system web interface, go to **Network** > **LAN Network** > **LAN Options**.
2. Enter or modify the system **Host Name**.

   Indicates your system name. If the system discovers a valid name during setup or a software update, the system automatically creates the host name. However, if an invalid name is found, such as a name with a space, the system creates a host name using the following format: `SystemType-xxxxxx`, where `xxxxxx` is a set of random alphanumeric characters.

   IPv4 networks: The system sends the host name to the DHCP server to attempt to register the name with the local DNS server or look up the domain where the system is registered (if supported).

3. **Optional:** Enter or modify the **Domain Name** that the system belongs to.
4. Select **Save**.

Manually Configure DNS Settings

You can manually configure the DNS server settings for your system.

If your system gets its IP address automatically using DHCP, you can't configure these settings. They display as read-only.

1. In the system web interface, go to **Network** > **DNS**.
2. Enter the DNS server addresses your system uses (you can enter up to four addresses).

3. Select **Save**.

Configure System VLAN Settings

You can configure your system's virtual LAN (VLAN) settings.

NOTE: VLAN isn't supported in IPv6 environments.

1. In the system web interface, go to **Network** > **LAN Network** > **LAN Options**.
2. **Optional:** Select the **Enable LLDP** check box so that the system can advertise itself on the network using Link Layer Discovery Protocol (LLDP).

   If you enable LLDP and then enter a VLAN ID, the VLAN ID you enter supersedes the auto-discovered VLAN ID from LLDP.
3. Select the **802.1p/Q** check box and enter a **VLAN ID**.

   You can use values from `1` to `4094`.
4. Enter a **Video Priority** to set the link layer priority of video traffic on the wired LAN.

   Video traffic is RTP traffic consisting of video data and associated RTCP traffic. You can use any value from `0` to `7`, although Poly recommends not using `6` and `7`.
5. Enter an **Audio Priority** to set the link layer priority of audio traffic on the wired LAN.

   Audio traffic is RTP traffic consisting of audio data and associated RTCP traffic. You can use any value from `0` to `7`, although Poly recommends not using `6` and `7`.
6. Enter a **Control Priority** to set the link layer priority of control traffic on the wired LAN.

   Control traffic consists of control information associated with a call:

   - **H.323**: H.225.0 Call Signaling, H.225.0 RAS, H.245, Far-End Camera Control (FECC)
   - **SIP**: SIP Signaling, FECC, Binary Floor Control Protocol (BFCP)

   You can use any value from `0` to `7`, although Poly recommends not using `6` and `7`.
7. Select **Save**.

Configure System 802.1X Settings

You can configure your system to use 802.1X authentication when connecting to the wired LAN.

Install the PKI certificates on your system required for authenticating with your network.

NOTE: 802.1X isn't supported in IPv6 environments.

The system supports the following authentication protocols:

- EAP-MD5
- EAP-TLS
- EAP-TTLS
  - EAP-MSCHAPv2

  - EAP-GTC
- EAP-PEAPv0 (MSCHAPv2)
  - EAP-MSCHAPv2
  - EAP-GTC

1. In the system web interface, go to **Network** > **LAN Network** > **LAN Options**.
2. Select the **Enable EAP/802.1X** check box.
3. Select an EAP/802.1X authentication method.
4. **Optional:** For EAP-TTLS or EAP-PEAPv0, choose an **EAP/802.1X Phase 2 Authentication**.
5. Enter an **EAP/802.1X Identity** for your system.

   You can't leave this field blank.
6. Enter an **EAP/802.1X Password** for your system.

   This setting is required when you use EAP-MD5, EAP-PEAPv0, or EAP-TTLS.
7. Select **Save**.

Configure Wired LAN Options

You can configure other LAN properties for your system in the local interface or the system web interface.

1. In the system web interface, go to **Network** > **LAN Network** > **LAN Options**.
2. Configure the following settings:

Setting	Description
Autonegotiation (under **General Settings** in the local interface)	Specifies whether the system should automatically negotiate the LAN speed and duplex mode per IEEE 802.3 autonegotiation procedures. If you enable this setting, the system sets **LAN Speed** and **Duplex Mode** to read-only. Poly recommends that you use autonegotiation to avoid network issues.
LAN Speed (under **General Settings** in the local interface)	Specifies whether to use **10 Mbps**, **100 Mbps**, or **1000 Mbps** for the LAN speed. Note that the switch must support the speed you choose. If you enable the **Autonegotiation** setting, this setting is read-only.
Duplex Mode (under **General Settings** in the local interface)	Specifies the duplex mode to use. Note that the switch must support the speed you choose. If you enable the **Autonegotiation** setting, this setting is read-only.

Setting	Description
Ignore Redirect Messages	Enables the system to ignore ICMP redirect messages. Poly recommends that you enable this setting in most circumstances.
ICMP Transmission Rate Limit (millisec)	Specifies the minimum number of milliseconds between transmitted packets. Enter a number between `0` and `60000`. The default value of `1000` means the system sends 1 packet per second. If you enter `0`, the system disables the transmission rate limit. This setting applies only to “error” ICMP packets. This setting has no effect on “informational” ICMP packets, such as echo requests and replies.
Generate Destination Unreachable Messages	Generates an ICMP **Destination Unreachable** message if the system can’t deliver a packet to its destination for reasons other than network congestion.
Respond to Broadcast and Multicast Echo Requests	When enabled, your system sends an ICMP **Echo Reply** message in response to a broadcast or multicast Echo Request that isn’t specifically addressed to the system.

3. Select **Save**.

LLDP and LLDP-MED Support

Link Layer Discovery Protocol (LLDP) and Link Layer Discovery Protocol Media Endpoint Discovery (LLDP-MED) are supported on your system. LLDP is a vendor-neutral link layer protocol in the Internet Protocol Suite used by network devices to advertise their identity and capabilities on an IEEE 802 local area network (LAN). This protocol runs over the data-link layer only, allowing connected systems running different network layer protocols to discover information about each other. LLDP-MED is an extension of LLDP.

Examples of applications that use information discovered by LLDP include:

- Network topology - A network management system (NMS) can accurately represent a map of the network topology.
- Inventory - A management system can query a switch to learn about all the devices connected to that switch. The LLDP protocol is formally specified in standards document IEEE 802.1AB.

LLMP-MED Information Discovery

LLDP-MED enables the following information discovery for your systems:

- Auto discovery of LAN policies enabling plug and play networking
- Inventory management, which allows network administrators to track their network devices.

Behavior When LLDP is Enabled

When LLDP is enabled, it discovers VLANs advertised by the network switch and automatically configures the system for one of the VLANs.

If the room system discovers any of the following VLAN types in LLDP data from the network switch, the system automatically configures itself for one of them. The chosen VLAN type is based on the order of precedence, as follows:

- Video Conferencing VLAN
- Voice VLAN
- Voice Signaling VLAN

If none of the above VLAN types are found, the room system configures itself for the default or native LAN of the switch port to which it is connected.

LLDP packets are transmitted regularly so that the network switch and the neighboring endpoints are aware of the system presence on the network.

Enable LLDP

Enable Link Layer Discovery Protocol (LLDP) to automatically configure your system to a VLAN with data received from your network switch.

1. In the system web interface, go to **Network** > **LAN Network** > **LAN Options**.
2. Select the **Enable LLDP** check box so that the system can advertise itself on the network using LLDP.

   If you enable LLDP and then enter a VLAN ID, the VLAN ID you enter supersedes the autodiscovered VLAN ID from LLDP.

3. Select **Save**.

Configure Wi-Fi as the Primary Network

You can configure Wi-Fi as your primary if you're using Zoom Rooms or Microsoft Teams Rooms as your conferencing provider You must use WEP, WPA, or WPA2 Wi-Fi protocols on the 2.4 GHz and 5 GHz spectrums.

NOTE: The quality of your calls is dependent on the quality of your Wi-Fi signal.

The system doesn't support Wi-Fi as a primary network for the following conferencing providers or modes:

- Poly Video Mode
- Device Mode (provider)
- GoToRoom
- RingCentral Rooms
- Dialpad

The system doesn't support the following options if you configure Wi-Fi as your primary network:

- Web proxy
- Provisioning
- 802.1x authentication

NOTE: You can pair a TC8 or TC10 to a system that's using Wi-Fi as the primary network. To pair a TC8 or TC10 over Wi-Fi, the touch controller must be on the same subnet as the video system.

1. In the system web interface, go to **Network** > **Wi-Fi Network**.
2. From the **Choose Network Type** drop-down menu, select **Wi-Fi**.
3. Do one of the following:
   - Select a network from **Available Wi-Fi Networks**. (The system lists networks in order of signal strength.)
   - Enter the network name in the **SSID** field.

   NOTE: Selecting a new SSID erases the previous SSID and relevant Wi-Fi settings from the system.
4. Configure the following settings:

   NOTE: Available settings vary with your selections.

Table 6-2

Setting	Description
Security	Specifies the encryption protocol: ● None ● WEP ● WPA/WPA2-PSK ● 802.1x EAP NOTE: Although 802.1x EAP is listed in the drop-down menu, it isn't supported when using Wi-Fi as the primary network.
Key (Passphrase/PSK)	Specifies an encryption passphrase (like a password) for the Wi-Fi network. You must enter the passphrase to connect to the Wi-Fi network.
IP Address	Specifies the IP address of the network.
Your IP Address is	This setting is read-only if your system gets its IP address automatically.
Subnet Mask	Specifies the network mask address for the network
Default Gateway	Specifies the IP gateway for the Wi-Fi network. This setting is read-only if your system gets its IP address automatically.
DNS Server	Specifies the DNS server address for the Wi-Fi network. This setting is read-only if your system gets its IP address automatically.
DNS Alternate Server	Specifies the alternate DNS server address for the Wi-Fi network. This setting is read-only if your system gets its IP address automatically.

5. Select **Connect**.

If you're using Microsoft Team Rooms as a provider, reboot the system.

Configure Wi-Fi Settings

In addition to a LAN, you can also connect your system to a Wi-Fi network.

With Wi-Fi enabled, users can connect to the room system and share content using an AirPlay or Miracast certified device.

1. In the system web interface, go to **Network** > **Wi-Fi Network**.
2. From the **Choose Network Type** drop-down menu, select **Wi-Fi**.
3. Do one of the following:
   - Select a network from **Available Wi-Fi Networks**. (The system lists networks in order of signal strength.)

- Enter the network name in the **SSID** field.

Selecting a new SSID erases the previous SSID and relevant Wi-Fi settings from the system.

4. Configure the following settings:

Available settings vary with your selections.

Table 6-3

Setting	Description
Security	Specifies the encryption protocol: • None • WEP • WPA/WPA2/FT PSK • 802.1x EAP
Key (Passphrase/PSK)	Specifies an encryption passphrase (like a password) for the Wi-Fi network. You must enter the passphrase to connect to the Wi-Fi network.
EAP Method	Specifies the extensible authentication protocol (EAP) for WPA-Enterprise (802.1xEAP): • PEAP • TLS • PWD
Phase 2 Authentication	Specifies Phase 2 authentication method: • MSCHAPV2 • GTC
User Name	Specifies the login user name for WPA-Enterprise (802.1xEAP).
Password	Specifies the login password for WPA-Enterprise (802.1xEAP).
IP Address	Specifies the IP address of the network.
Your IP Address	Specifies the IP address for the Wi-Fi network. This setting is read-only if your system gets its IP address automatically.
Subnet Mask	Specifies the network mask address for the network.
Default Gateway	Specifies the IP gateway for the Wi-Fi network. This setting is read-only if your system gets its IP address automatically.
DNS Server	Specifies the DNS server address for the Wi-Fi network. This setting is read-only if your system gets its IP address automatically.

Table 6-3 (continued)

Setting	Description
DNS Alternate	Specifies the alternate DNS server address for the Wi-Fi network. This setting is read-only if your system gets its IP address automatically.

Configure Network Quality Settings

You can specify how your system responds to network quality issues by controlling how your network handles packets during video calls.

1. In the system web interface, go to **Network** > **LAN Network** > **Network Quality**.
2. Configure the following settings:

Table 6-4 Network Quality Settings

Setting	Description
Quality Preference	Specifies which video stream has precedence when attempting to compensate for network loss: • **Both** people and content streams • **People** streams • **Content** streams The stream option you select experiences less quality degradation during network loss compensation than the other. Choosing **Both** means each stream experiences roughly equal degradation. This setting is not available if you enable **Automatically Adjust People/Content Bandwidth**.
Type of Service	Specifies the type of service (ToS), which lets you prioritize packets sent to your system for video, audio, Far End Camera Control (FECC), and OA&M: • **IP Precedence**: Represents a priority level between 0 and 7. • **DiffServ**: Represents a priority level between 0 and 63.
Video	Specifies the **IP Precedence** or **DiffServ** priority level for video RTP and associated RTCP traffic.
Audio	Specifies the **IP Precedence** or **DiffServ** priority level for audio RTP and associated RTCP traffic.

Table 6-4 Network Quality Settings (continued)

Setting	Description
Control	Specifies the **IP Precedence** or **DiffServ** priority level for control traffic on the following channels: • **H.323**: H.225.0 Call Signaling, H.225.0 RAS, H.245, and FECC • **SIP**: SIP Signaling, FECC, and Binary Floor Control Protocol (BFCP) (The system enables FECC by **Allow Other Participants in a Call to Control Your Camera**.)
OAM	Specifies the **IP Precedence** or **DiffServ** value for traffic unrelated to video, audio, or FECC.
Maximum Transmission Unit Size	Specifies whether to use the default Maximum Transmission Unit (MTU) size for IP calls or let you select it.
Maximum Transmission Unit Size Bytes	Specifies the MTU size (in bytes) used in calls. • If video quality is poor or you experience network errors, packets might be too large. Decrease the MTU. • If the network is burdened with unnecessary overhead, packets might be too small. Increase the MTU.
Enable Lost Packet Recovery	If you enable this setting, the system uses the Lost Packet Recovery (LPR) protocol to help compensate for packet loss if it occurs.
Enable RSVP	If you enable this setting, the system can use the Resource Reservation Setup Protocol (RSVP) to request that routers reserve bandwidth along an IP connection path. (To use this feature, the near and far site must support RSVP.)
Dynamic Bandwidth	Enable this setting if you want the system to automatically determine the optimal call rate.
Maximum Transmit Bandwidth	Specifies the maximum transmit call rate between 64 kbps and the system's maximum line rate. Use this setting when the system connects to the network using an access method with different transmit and receive bandwidths.
Maximum Receive Bandwidth	Specifies the maximum receive call rate between 64 kbps and the system's maximum line rate. Use this setting when the system connects to the network using an access method with different transmit and receive bandwidths.

3. Select **Save**.

Configure H.323 Settings

If your network uses an H.323 gatekeeper, the system can automatically register its H.323 name and extension. Others can then call the system using its H.323 name or extension instead of its IP address.

1. In the system web interface, go to **Call Configuration** > **H.323**.
2. Configure the following settings:

Setting	Description
Enable IP H.323	Enables the system to display H.323 settings and configuration options.
Registration Status	Read-only setting shows if your system is registered with an H.323 gatekeeper.
H.323 Name	How gatekeepers and gateways identify your system. You can make point-to-point calls using H.323 names if both systems are registered to a gatekeeper. The **H.323 Name** is the same as the device name unless you change it. Your organization's dial plan might define the name you can use.
H.323 Extension (E.164)	You can place point-to-point calls using this extension if both systems are registered with a gatekeeper. Gatekeepers and gateways also use the extension to identify your system. Your organization's dial plan might define the extensions you can use.
Use Gatekeeper	Specifies if you want to use a gatekeeper for H.323 services. • **Off**: Calls don't use a gatekeeper. • **Auto**: System tries to automatically find an available gatekeeper. • **Specify**: Calls use the specified gatekeeper. You must select this setting to enable H.235 Annex D Authentication. If you don't configure this setting to **Off**, a registration status displays.
Require Authentication	Enables support for H.235 Annex D Authentication. When you enable H.235 Annex D Authentication, the H.323 gatekeeper ensures that only trusted H.323 endpoints can access the gatekeeper. This setting is available when you set **Use Gatekeeper** to **Specify**.
User Name	Specifies a user name if the gatekeeper requires authentication for registration.
Password	Specifies a password if the gatekeeper requires authentication for registration.
Current Gatekeeper IP Address	Displays the IP address that the gatekeeper is using. If you select **Off** for the **Use Gatekeeper** field, the **Current Gatekeeper IP Address** field doesn't display.

Setting	Description
Primary Gatekeeper IP Address	The gatekeeper IPv4 address the system registers with. As part of the registration process, the gatekeeper might return alternate gatekeepers. If your system loses communication with the primary gatekeeper, your system registers with the alternate gatekeeper but continues to poll the primary gatekeeper. If the system re-establishes communication with the primary gatekeeper, it unregisters from the alternate gatekeeper. • If you set the **Use Gatekeeper** field to **Off**, the **Primary Gatekeeper IP Address** field doesn't display. • If you use an automatically selected gatekeeper, this area displays the gatekeeper's IP address. • If you specify a gatekeeper, enter the gatekeeper IP address or name (for example, `10.11.12.13` or `gatekeeper.companyname.usa.com`).

3. Select **Save**.

Configure SIP Settings

If your network supports SIP, you can use it to connect calls on your system.

NOTE: SIP (registered and unregistered) configurations don't support configuring NAT.

1. In the system web interface, go to **Call Configuration** > **SIP**.
2. Configure the following settings:

Setting	Description
Enable SIP	Enables the system to make and receive SIP calls.
Registration Status	Read-only setting shows if your system is registered to a SIP server.
SIP Server Configuration	Specifies whether to automatically or manually set the SIP server's IP address. If you select **Auto**, you can't edit the **Transport Protocol**, **Registrar Server**, and **Proxy Server** settings. If you select **Specify**, you can edit these settings.

Setting	Description
Transport Protocol	Sets the protocol your system uses for SIP signaling (your SIP network determines which protocol is required). • **Auto**: Enables automatic negotiation of protocols in the following order: TLS, TCP, and UDP. This is applicable only when using a proxy server. For unregistered systems, if you set the Transport Protocol to **Auto**, the order is TCP then UDP. TLS is not included. • **TLS**: Provides secure SIP signaling. TLS is available only when you register your system with a SIP server that supports it. If you set this option, your system ignores TCP/UDP port 5060. Poly recommends you use the TLS setting when possible. • **TCP**: Provides reliable transport via TCP. • **UDP**: Provides best-effort transport via UDP.
Force Connection Reuse	Disabled by default (recommended). When disabled, the system uses an ephemeral source port for outgoing SIP messages. When enabled, the system uses the active SIP listening port as the source port (5060 or 5061, depending on the negotiated SIP transport protocol in use). You can use this setting to establish correct operation with remote SIP peer devices, which require that the source port match the contact port in SIP messages.
BFCP Transport Preference	Controls content sharing negotiation behavior. When you use the Binary Floor Control Protocol (BFCP), a relationship is established between the floor control server and its clients. What you set here determines how network traffic flows between the server and clients. NOTE: TCP is typically slightly slower but more reliable than UDP. Some deployments don't support it, such as with session border controllers (SBCs). • **Prefer UDP**: (Default) Starts resource sharing using UDP but falls back to TCP if needed. • **Prefer TCP**: Starts resource sharing using TCP but falls back to UDP if needed. • **UDP Only**: Shares resources only using UDP. If UDP is unavailable, your system can't share content in a separate video stream. • **TCP Only**: Shares resources only through TCP. If TCP is unavailable, your system can't share content in a separate video stream.
Sign-in Address	The SIP address or name of the system (for example, `mary.smith@department.company.com`). If you leave this blank, the system IP address is used for authentication.
User Name	The user name for authenticating your system with a SIP registrar server (for example, `marySmith`). If the SIP proxy requires authentication, you can't leave the user name and password blank.

Setting	Description
Password	The password associated with the user name for authenticating your system with a SIP registrar server.
Registrar Server	The `<IP_Address>` can be an IPv4 address or an FQDN such as `servername.company.com:5060`.
Proxy Server	The IP address or FQDN of the SIP proxy server. If you leave this field blank, the system uses the registrar server address. If you also leave the SIP registrar server field blank, there is no SIP proxy server to configure. By default, the system sends SIP signaling to ports 5061 (TLS) and 5060 (TCP) on the proxy server. The syntax for this setting is the same as the registrar server.
Registrar Server Type	Specifies the type of SIP registrar server you're using.

3. Select **Save**.

AS-SIP Settings

Your system supports the Assured Services Session Initiation Protocol (AS-SIP), which meets the requirements defined in Unified Capabilities Requirements (UCR) 2013 Change 3.

Developed by the U.S. Department of Defense (DoD), AS-SIP includes secure signaling and media encryption, Quality of Service (QoS), and IPv6 support.

Enable AS-SIP Settings

In the AS-SIP settings, you can choose the default network domain for your system's outbound calls. You also can add and delete custom domains.

1. In the system web interface, go to **Call Configuration** > **SIP**.
2. Select the **Enable AS-SIP** check box.

Add a Network Domain for Outbound Calls

While your system's AS-SIP outbound call settings include the standard DoD network domains Defense Switched Network (DSN) and Unified Capabilities (UC), you can also add a custom domain.

1. In the system web interface, go to **Call Configuration** > **SIP**.
2. Under **Outbound Precedence Configuration**, select **Add**.
3. Enter the name of the domain you want to add and select **Save**.

Delete a Network Domain for Outbound Calls

You can remove a custom network domain associated with your system's AS-SIP settings. You can't delete the preconfigured domains DSN and UC.

1. In the system web interface, go to **Call Configuration** > **SIP**.
2. Under **Outbound Precedence Configuration**, locate the domain you want to remove and select **Delete** in the same row as the domain.

Select the Default Network Domain for Outbound Calls

You can choose the default network domain for your system's AS-SIP outbound calls.

1. In the system web interface, go to **Call Configuration** > **SIP**.
2. Under **Outbound Precedence Configuration**, select a domain from the list (for example, **dsn**).

Enable Point-to-Point Call Escalation to a Clariti Core Conference Call

When you register your system with a Poly Clariti Core system, you can enable a point-to-point call on your system to escalate to an impromptu conference call on an external Polycom MCU.

You must configure your system's SIP settings to register with your Poly Clariti Core system.

For information about working with a Poly Clariti Core system, specifically SIP conference factories, see the Poly Clariti Core, Poly Clariti Edge, and Poly Clariti Relay Administrator Guide.

1. In the system web interface, go to **Call Configuration** > **SIP**.
2. Go to **Adhoc Call Escalation**.
3. Select the **Enable automatic call escalation of point-to-point to an external MCU** check box.
4. For the **Conference Factory ID**, enter the ID associated with the SIP conference factory on your Poly Clariti Core system.

   NOTE: The conference factory ID must come from the same Poly Clariti Core system your video conferencing system uses for SIP registration. Calls don't escalate if your Poly Clariti Core system doesn't recognize the ID you provide.

5. Select **Save**.

   Calls converted through a Poly Clariti Core system gateway (H.323 to SIP or vice versa) don't join an impromptu conference call.

Wireless Devices

The system includes Wi-Fi and Bluetooth wireless communication options so your users can discover the system on the network with the Polycom Content App or their AirPlay- or Miracast-certified device. Your remote control also connects to the system using Bluetooth.

You can enable or disable these features as needed.

NOTE: If you have a no-radio system, wireless connections are unavailable including the Bluetooth remote control.

Specify the Wireless Operating Channel for Miracast-Certified Devices

You can choose the wireless LAN (WLAN) operating channel the system uses for connecting with Miracast-certified devices. Changing the operating channel can, for example, help minimize network interference and video quality issues when sharing content.

Available operating channels are within the 2.4 GHz signal range. During initial setup, the system picks an operating channel based on the country you choose. If you don't choose a country during setup, the system selects a random operating channel in the 2.4 GHz signal range.

The listening channel, which is used by the system to advertise it can connect with nearby Miracast-certified devices, is selected automatically in the 2.4 GHz signal range. You can't configure the listening channel.

NOTE: You can't choose an operating channel for Miracast if a secondary Wi-Fi network is configured. The system automatically chooses the optimal Miracast frequency.

For more information on Miracast, see the *Poly VideoOS Miracast Performance Technical Reference* on the Poly Online Support Center.

1. In the system web interface, go to **Security** > **Wireless Security**.
2. Choose an **Operating Channel**.

   Remember the following when selecting an operating channel:

   - To avoid content quality issues (such as latency or packet loss), select the same operating channel configured on your wireless access point (WAP).
   - You can't change the operating channel during an ongoing content mirroring session.

Enable Miracast Over Infrastructure

Miracast over infrastructure enables devices to communicate with your system using existing network infrastructure, including wired and wireless LAN connections.

- Only Windows 10 devices with build 1903 or later support this feature.
- The Windows 10 firewall automatically allows inbound TCP ports 7250 and 7236. If a third-party firewall application blocks these ports, you may need to add these two inbound ports.
- Your system and the Miracast casting source device must be on the same enterprise network via Ethernet or a secure Wi-Fi connection

For more information on Miracast, see the Poly VideoOS Miracast Performance Technical Reference on the Poly Online Support Center.

1. In the system web interface, go to **Security** > **Wireless Security**.
2. Select the **Miracast Over Infrastructure** check box.

Disable Wireless Options

You can disable the wireless features on your system. Wireless features are enabled by default.

Remember the following when disabling wireless features:

- Disabling wireless connectivity turns off screen mirroring with Miracast-certified devices and prevents the system from using Wi-Fi to connect to a secondary network.
- Disabling Bluetooth turns off screen mirroring with AirPlay-certified devices and prevents those devices and the Polycom Content App from automatically discovering your system. (You can still connect with the Polycom Content App using the system IP address.)
- Disabling Bluetooth also disables your remote control.

1. In the system web interface, go to **Security** > **Wireless Security**.
2. Do one of the following:
   - Clear the **Enable Wireless Connectivity** check box.
   - Clear the **Enable Bluetooth** check box.

7 Securing the System

Your system includes features and settings to help you meet security requirements.

Managing System Access

An administrator can configure systems to grant access using network accounts that are authenticated through an Active Directory (AD) server such as the Microsoft Active Directory server.

An administrator can configure the system to grant access using network accounts that are authenticated through an Active Directory (AD) server such as the Microsoft Active Directory server. In this case, the account information is stored on the AD server and not on the room system. The AD administrator assigns accounts to AD groups, one for the room system admin access and one for user access. For this reason, external authentication is also referred to as Active Directory authentication.

The room system administrator configures the external authentication settings on the system to specify the address of an AD Server for authenticating user logins, AD group for user access, and AD group for admin access on the room system. The system can map only one Active Directory group to a given role.

Users can enter their network account credentials to access the system on the following interfaces:

- Web interface (admin access only)
- Local interface (`user` and `admin` role accounts when **Require Login for System Access** is enabled; `admin` accounts when admin-only areas of the local interface are accessed)

When External Authentication is enabled in PKI environments where Always Validate Peer Certificates from Server is enabled on the system, configure the Active Directory Server Address on the system using the address information that is in the Active Directory Server identity certificate. This allows the system to validate the identity certificate. As an example, if the Active Directory Server identity certificate contains its DNS name only, and no specific IP address, configuring the Active Directory Server Address on the system using the server's IP address results in certificate validation failure, and consequently authentication failure. The system configuration would have to specify the server by DNS name, in this case, to successfully match the server certificate data.

The system local user account is disabled when **Enable Active Directory External Authentication** is enabled. The admin account is active and usable, however.

Local Accounts

The system stores local account IDs and passwords.

Configure Password Policies

You can specify requirements for administrator, remote access, and SNMP passwords for your system.

Poly strongly recommends that you create an administrator password for your system. Administrators set password policies and minimum requirements.

1. In the system web interface, go to **Security** > **Password Requirements**.
2. Configure the following settings for the **Admin Room** , **Remote Access**, or **SNMP** passwords:

   NOTE: You must configure the **Admin Room** and **Remote Access** password settings separately.

3. Select **Save**.

Changes to most password policy settings don't take effect until the next time the password is changed. Changes take effect immediately for **Minimum Password Age in Days**, **Maximum Password Age in Days**, and **Password Expiration Warning**.

Create Local Administrator Credentials

You can require local administrator credentials for in-room and remote access to the system.

Passwords for logging in to the system are case sensitive and can't contain more than 40 characters.

1. In the system web interface, go to **Security** > **Local Accounts**.
2. Configure the following settings:

Setting	Description
Admin ID	The local administrator account name (default is `admin`).
Room Password	You must enter this password to change administrator settings in the local interface. The default password is the last six characters of the serial number listed in **System Details** and on the back of the device.
Remote Access Password	If you set this option, you must enter this password to access the system through the system web interface or command-line API (SSH or telnet). This password lets you perform device management tasks, such as updating the system's software.

3. **Optional:** Do one of the following:
   - To use the local administrator **Room Password** for remote logins, leave the **Use Room Password for Remote Access** option enabled.

     NOTE: Password requirements for the local administrator password and remote access password must be configured separately.

   - If you don't want to use the local administrator **Room Password** for remote logins, disable the **Use Room Password for Remote Access** option.

   This setting specifies that the system uses the local administrator **Room Password** for remote logins. This setting is enabled by default.
4. Select **Save**.

Change Administrator Credentials

You can change the administrator username and password to access the system web interface and administrator sections of the local interface.

NOTE: Depending on your system and software version, you may be prompted to change the admin password the first time you sign in to the system.

The default username is `admin` and the default password is the last six characters of the system's serial number.

1. In the system web interface, go to **Security** > **Local Accounts**.

2. Enter the new administrator username in the **Admin ID** field.
3. Select **Change Password**.
4. Enter the current password and then the new password.

   Entering an incorrect current password too many times causes the system to automatically log out and close the session.
5. Select **Save**.

Configure Account Lockout Settings

Account lockout controls prevent unauthorized access to your system.

1. In the system web interface, go to **Security** > **Local Accounts**.
2. Configure the following settings (your changes save automatically):

Setting	Description
Lock Admin Account after Failed Logins	Specifies the number of failed login attempts allowed before the system locks the account. You can turn this setting **Off**.
Admin Account Lock Duration	Specifies the amount of time an account is locked because of failed login attempts. After this period expires, the system resets the failed login attempts counter to zero, and users can again log in with that account.
Reset Admin Account Lock Counter After	Determines how many hours the failed login window lasts. The window is a period of time starting with the first failed login attempt and during which the system counts subsequent failed attempts against the number allowed. The counter resets to zero at the end of the window (if the account is not locked because of failed attempts) and after a successful login.

Enable External Authentication

Set up external authentication through Active Directory for your system. You can then access the system with an Active Directory account or the system's local administrator credentials.

Configure the **Domain Name** setting on the **Network** > **LAN Network** > **LAN Options** page with your Active Directory domain.

NOTE: The system can map only one Active Directory group to a given role.

1. In the system web interface, go to **Security** > **Global Security**.
2. Configure the following settings:

Setting	Description
Enable Active Directory External Authentication	Specifies whether to authenticate users with the Active Directory server. When you enable Active Directory authentication, users can log in to the system with their network credentials using this format: `domain\user`. With this format, users can have accounts on multiple domains.

Setting	Description
Active Directory Server Address	Specifies the Active Directory server's FQDN or IP address. If you are using subdomains, append port number 3268 as follows: `ad.domain.com:3268`. You can alternatively use Poly Clariti Manager as an Active Directory server and enter its address here. If you enable **Always Validate Peer Certificates from Server** on the **Certificates** page, make sure this value matches what is in the Active Directory server certificate. For example, if you enter the Active Directory server IP address here, but the certificate only has the server's FQDN, external authentication fails.
Active Directory Admin Group	Specifies the Active Directory group whose members should have administrator access to the system. This name must exactly match the name in the Active Directory server for successful authentication.
Active Directory User Group	Specifies the Active Directory group whose members should have user access to the system. This name must exactly match the name in the Active Directory server for successful authentication.

3. Select **Save**.

Configure System Access Settings

Configure how you and others access the system.

1. In the system web interface, go to **Security** > **Access**.
2. Configure the following settings:

Setting	Description
Enable Network Intrusion Detection System (NIDS)	When you enable this setting, the system creates security log entries when it detects a possible network intrusion.
Enable Web Access	Specifies whether you can access the system using the system web interface. IMPORTANT: If you disable web access, the Poly TC8 or TC10 won't be able to connect to the system.
Enable Diagnostics Port Idle Session Timeout	Specifies whether to allow the diagnostics port to time out and close the active session at the configured time interval of no activity or not. You set the timeout at **Idle Session Timeout in Minutes**.
Enable API Port Idle Session Timeout	Specifies whether to allow the API port to time out and close the active session at the configured time interval of no activity or not. You set the timeout at **Idle Session Timeout in Minutes**.
Enable SNMP Access	Specifies whether to allow SNMP access.
Idle Session Timeout in Minutes	Specifies the number of minutes a session can be idle before it times out.
Maximum Number of Active Sessions	Specifies the maximum number of users logged in through the system web interface or command-line API (SSH or telnet).
Max Session Timeout in Minutes	Specifies the maximum number of minutes a session can be open before it times out, regardless of session activity.

Setting	Description
Minimum TLS Version	Specifies the system minimum TLS version. You can restrict your system from using earlier versions of TLS for secure communications. For example, if you set your minimum TLS version to 1.1, you're disabling TLS 1.0.

3. Select **Save**.

Command-Line API Access

You can access your G7500 and Poly Studio G62 system's command-line API over SSH, telnet, or through a serial port connection.

Enable Command-Line API Access Over SSH

Use SSH on port 22 if you want encrypted access to the system command-line API.

1. In the system web interface, go to **Security** > **Access**.
2. Select the **Enable Legacy API Over SSH** check box if it's cleared.
3. Select the **Enable Telnet Access** check box.

Configure the SSH Port Lock

You can limit the number of failed SSH login attempts to your system command-line API to protect against brute-force attacks.

Enable command-line API access over SSH to access these settings.

1. In the system web interface, go to **Security** > **Access**.
2. Configure the following settings:

Setting	Description
Lock SSH Port After Failed Logins	Specifies the number of failed login attempts allowed before the system locks SSH access to the API.
SSH Port Lock Duration	Specifies the amount of time that SSH access to the API remains locked due to failed login attempts. After this period expires, the system resets the failed login attempts counter, and you can again try to log in again.
Reset SSH Port Lock Counter After	Specifies the number of hours, starting with the first failed login attempt, during which subsequent failed login attempts are counted against the maximum number allowed (**Lock SSH Port after Failed Logins**). The counter resets when the set period of time expires or a user successfully logs in.

3. Select **Save**.

Enable Command-Line API Access Over Telnet

Use port 24 or 23 to access the system command-line API using telnet.

1. In the system web interface, go to **Security** > **Access**.

2. Select the **Enable Telnet Access** check box.

3. Choose an **API Port** for telnet connections: **24** (default) or **23**.

Disable the Telnet Password

By default, you must enter a password to connect to the command-line API using telnet. You can disable it.

1. In the system web interface, go to **Security** > **Access**.

2. Clear the **Telnet Authentication** check box.

Locking the Telnet Port

Other than disabling telnet access to the system command-line API, you can't restrict telnet access in other ways, such as locking its port for too many failed login attempts (like you can with web or SSH access).

NOTE: Remember the following about telnet access: A telnet session disconnects after three failed login attempts. If you start a new session, the system allows another three attempts.

Configure Serial Port Settings

Configure RS-232 serial port settings for your system.

Poly Studio G62, Poly Studio X72, Poly Studio X70, Poly Studio X52, Poly Studio X50, and Poly Studio X30 don't have a serial port.

1. In the system web interface, go to **General Settings** > **Serial Ports**.

2. Configure the following settings:

Setting	Description
RS-232 Mode	Specifies the mode used for the RS-232 serial port. • **Off**: Disables the serial port. • **Control**: Receives control signals from a touch-panel control. Allows any device connected to the RS-232 port to control the system using API commands.
Baud Rate Parity Stop Bits	Set these options to the same values configured on the serial device.
Data Bits	This setting is read-only.
RS-232 Flow Control	Specifies if you want to use hardware flow control between the connected device and your system.

Setting	Description
Login Mode	Specifies the credentials necessary for a control system to connect to the RS-232 port. • **Admin password only**: (Default) Requires the administrator password (if you set one) when the control system connects. • **User Name/Password**: Requires the user name and administrator password (if you set one) when the control system connects. • **None**: The system doesn't require a user name or password when the control system connects. NOTE: This setting only displays when you set RS-232 Mode to **Control**.

3. Select **Save**.

Disable Command-Line API Access

To disable command-line API access to your system, close network ports 22, 23, and 24 and the RS-232 serial port.

1. In the system web interface, go to **Security** > **Access**.
2. Clear the **Enable Telnet Access** check box.

   Network ports 22, 23, and 24 on your system are closed.
3. In the system web interface, go to **General Settings** > **Serial Ports**.
4. For **RS-232 Mode**, select **Off**.

   The serial port is closed.

Command-line API access to your system is disabled.

Configure the System Web Interface Port Lock

You can limit the number of failed login attempts to the system web interface to protect against brute-force attacks.

1. In the system web interface, go to **Security** > **Access**.
2. Configure the following settings:

Setting	Description
Lock Port after Failed Logins	The number of failed login attempts allowed before the web interface locks. You can set this to **Off**.
Port Lock Duration	Specifies the amount of time that the web interface remains locked due to failed login attempts. When this period expires, the failed login attempts counter resets and you can try to log in again.

Setting	Description
Reset Port Lock Counter After	Specifies the number of hours, starting with the first failed login attempt, during which subsequent failed login attempts are counted against the maximum number allowed (**Lock Port After Failed Logins**). The counter resets when the set period of time expires or a user successfully logs in.

3. Select **Save**.

Disable USB Ports

You can configure your system to disable the use of the system USB ports.

NOTE: You can't completely turn off the USB-C port; it still provides power.

If you disable the system's USB ports, you can't use the system as an external camera, microphone, and speaker accessory (i.e., Poly Device Mode).

1. In the system web interface, go to **Security** > **Access**.
2. Select **Disable All USB Ports**.

   The system reboots and disables all USB ports.

Detecting Intrusions

When the system detects a possible network intrusion, it logs an entry to the security log.

The Enable Network Intrusion Detection System (NIDS) setting controls the logging behavior. The security log prefix identifies the type of packet detected, as shown in the following table:

Prefix	Packet Type
SECURITY: NIDS/unknown_tcp	Packet that attempts to connect or probe a closed TCP port
SECURITY: NIDS/unknown_udp	Packet that probes a closed UDP port
SECURITY: NIDS/invalid_tcp	TCP packet in an invalid state
SECURITY: NIDS/invalid_icmp	ICMP or ICMPv6 packet in an invalid state
SECURITY: NIDS/unknown	Packet with an unknown protocol number in the IP header
SECURITY: NIDS/flood	Stream of ICMP or ICMPv6 ping requests or TCP connections to an opened TCP port

Following the message prefix, the security log entry includes the time stamp and the IP, TCP, UDP, ICMP, or ICMPv6 headers. For example, the following security log entry shows an `unknown_udp` intrusion:

```
2009-05-08 21:32:52 WARNING kernel: SECURITY: NIDS/unknown_udp IN=eth0
OUT= MAC=00:e0:db:08:9a:ff:00:19:aa:da:11:c3:08:00 SRC=172.18.1.80
DST=172.18.1.170 LEN=28 TOS=0x00 PREC=0x00 TTL=63 ID=22458 PROTO=UDP
SPT=1450 DPT=7788 LEN=8
```

PKI Certificates

If your organization uses a public key infrastructure (PKI) for securing network connections, Poly recommends that you have a strong understanding of certificate management and how it applies to your system.

PKI certificates authenticate secure network connections to and from the system. The system uses standard PKI techniques to configure and manage certificates and certificate signing requests (CSRs). ANSI X.509 standards regulate the certificate characteristics.

Your system can generate CSRs to send to a certificate authority (CA), a trusted entity that validates and officially issues, or signs, PKI certificates. Your system uses those certificates for client and server authentication.

If your system is in an environment without PKI, you don't need a CA-signed certificate; the system comes with a self-signed certificate for its TLS connections. When you deploy PKI, however, self-signed certificates aren't trusted and you must use CA-signed certificates.

Root certificates installed on your system automatically transfer to a paired TC10 or TC8 device. If you delete root certificates from the system, they're automatically deleted from the TC10 or TC8. System certificates are unique to each system and don't transfer to paired devices.

Here are some examples of how you use PKI certificates:

- If your environment uses the 802.1X authentication framework for wired connections, create a CSR and install the resulting CA-signed certificate on your system so it's trusted on the network.
- If you want to navigate with a browser over a secure connection to your system web interface, create a CSR and install the resulting CA certificate chain on your system to replace its factory-installed certificate, which isn't trusted.
- Provisioning your system using Poly Clariti Manager in a secure environment.

NOTE: Your system must have a **Host Name** in this situation.

Create a Certificate Signing Request

If you deploy a PKI in your environment, create a CSR to make sure your system or device is trusted by its network peers.

NOTE: Only one CSR can exist at a time. After a CSR is generated, get it signed and installed on your system before creating another. If you generate a CSR and generate a second CSR before you install the first one, the device discards the previous one.

1. In the system web interface, go to **Security** > **Certificates**.
2. Select **Create Certificate Signing Request (CSR)**.
3. In the **Certificate Details** form, complete the following fields:

Table 7-1 CSR Settings

CSR Information	Description
Hash Algorithm	Specifies the hash algorithm for the CSR: SHA-256 (recommended) or SHA-1 (not recommended).

Table 7-1 CSR Settings (continued)

CSR Information	Description
Common Name (CN)	Specifies the system name. This is a required field. Maximum characters: 64 (truncated if necessary). Poly recommends the following guidelines for this field: ● For systems registered in DNS, use the system's FQDN. ● For systems not registered in DNS, use the system's IP address.
Organizational Unit (OU)	Specifies the unit of business defined by your organization. Default is blank. Maximum characters: 64. NOTE: The system supports only one OU field. If you want the signed certificate to include more than one OU field, you must download and edit the CSR manually.
Organization (O)	Specifies your organization's name. Default is blank. Maximum characters: 64.
City or Locality (L)	Specifies the city where your organization is located. Default is blank. Maximum characters: 128.
State or Province (ST)	Specifies the state or province where your organization is located. Default is blank. Maximum characters: 128.
Country (C)	Displays the country selected in the setup wizard. You can't change this setting here.
SAN: FQDN	Specifies the FQDN assigned to the system. This is the same as the **Common Name (CN)**, but it isn't truncated. Default is blank. Maximum characters: 253.
SAN: Additional Name	Specifies an additional name. Default is blank. Maximum characters: 253.
SAN: IPv4 Address	Default is the IPv4 address of the system. Maximum characters: 15.
User Principal Name (UPN)	Specifies the user and domain name to log in to a Windows domain (for example, `UserName@YourDomain.com`). This is the `userPrincipalName` attribute of the account object in Active Directory. Relate this setting to the 802.1X identity and password you specified on the **Network** > **LAN Options** page. Default is blank.

4. Select **Create**.
5. If the CSR was created successfully, select **CSR Available for Download** to download the CSR file to send to a CA, which issues your signed certificate.

Create a TC10 or TC8 Certificate Signing Request

If you deploy a PKI in your environment, create a CSR to make sure your system or device is trusted by its network peers.

Only one CSR can exist on your device at a time. After you generate a CSR, get it signed and install it on your device before generating another. If you generate a second CSR before you install the first one, the device discards the previous CSR.

1. In the system web interface, go to **Security** > **Certificates**.
2. Choose from:
   - Select **Poly TC8** > **Create and Download CSR**.
   - Select **Poly TC10** > **Create and Download CSR**.

3. In the **Certificate Details** form, complete the following fields:

Table 7-2 CSR Settings

CSR Information	Description
Hash Algorithm	Specifies the hash algorithm for the CSR: SHA-256 (recommended) or SHA-1 (not recommended).
Common Name (CN)	Specifies the system name. This is a required field. Maximum characters: 64 (truncated if necessary). Poly recommends the following guidelines for this field: ● For systems registered in DNS, use the system's FQDN. ● For systems not registered in DNS, use the system's IP address.
Organizational Unit (OU)	Specifies the unit of business defined by your organization. Default is blank. Maximum characters: 64. NOTE: The system supports only one OU field. If you want the signed certificate to include more than one OU field, you must download and edit the CSR manually.
Organization (O)	Specifies your organization's name. Default is blank. Maximum characters: 64.
City or Locality (L)	Specifies the city where your organization is located. Default is blank. Maximum characters: 128.
State or Province (ST)	Specifies the state or province where your organization is located. Default is blank. Maximum characters: 128.
Country (C)	Displays the country selected in the setup wizard. You can't change this setting here.
SAN: FQDN	Specifies the FQDN assigned to the system. This is the same as the **Common Name (CN)**, but it isn't truncated. Default is blank. Maximum characters: 253.
SAN: Additional Name	Specifies an additional name. Default is blank. Maximum characters: 253.
SAN: IPv4 Address	Default is the IPv4 address of the system. Maximum characters: 15.
User Principal Name (UPN)	Specifies the user and domain name to log in to a Windows domain (for example, `UserName@YourDomain.com`). This is the `userPrincipalName` attribute of the account object in Active Directory. Relate this setting to the 802.1X identity and password you specified on the **Network** > **LAN Options** page. Default is blank.

4. Select **Create**.

   If the system successfully creates the CSR, it automatically downloads the file.

5. Send the CSR file to a CA, which issues your signed certificate.

Configure Certificate Validation Options

The system can automatically validate user-installed certificates when establishing an authenticated network connection.

To perform this validation, you must install certificates from the CAs that are part of the trust chain on the system.

For a full list of preinstalled certificates on your system, see the *Poly VideoOS, TC10, and TC8 Certificates Update* on the HP Support Site.

1. In the system web interface, go to **Security** > **Certificates**.

2. Configure the following settings (your changes save automatically):

Setting	Description
Maximum Peer Certificate Chain Depth	Specifies how many links a certificate chain can have. The term *peer certificate* refers to any certificate sent by the far-end host when a network connection is being established between the two systems.
Always Validate Peer Certificates From Server	Determines whether your system requires a remote server to present a valid certificate when connecting to it for services, such as provisioning.
Always Validate Peer Certificates From Browser	Determines whether your system requires a web browser to present a valid certificate when connecting to it. NOTE: If you are using private PKI certificates in your environment and want HTTPS software downloads to work, you must install the trusted root certificate from your internal certificate authority (CA) on the system since certificate validation is always performed.
Disable Preinstalled Certificates	Disables preinstalled root certificate CA chains.

Install a Certificate

Once you receive a signed certificate from the CA that processed your CSR, you can install it on your system.

NOTE: System certificates must be created on the Poly system and signed by an external CA before installation. Externally created device certificates won't work properly.

This option isn't available if your certificate is provisioned to the system.

1. In the system web interface, go to **Security** > **Certificates**.
2. Select the **System** tab or **Connected Device** tab.
3. Select **Install Certificate** to browse for the CA-signed certificate you want to install and select **Open**.

   Your system accepts the following certificate file formats: `.pem`, `.der`, and PKCS #7 (which typically has a `.p7b` file name extension).

The system checks the certificate data and, if the upload is successful, adds it to the page.

With your CA-signed certificate installed, your system is trusted by its network peers (provided that a root certificate has established a chain of trust). This allows you to navigate with your web browser over a secure connection to the system web interface and perform administrative tasks.

View a Certificate

The system lists user-installed certificates in the system web interface, where you also can view the contents of those certificates.

1. In the system web interface, go to **Security** > **Certificates**.

   The **Certificates** page lists your user-installed certificates. It includes information about which entity a certificate is issued to, who issued it, when it expires, and the certificate type (server, client, or CA).

2. To view the contents of a certificate, select **Visibility** in the same row as the certificate.

   The certificate contents display in plain text.

View a TC8 or TC10 Certificate

The system lists user-installed TC8 or TC10 certificates in the system web interface, where you also can view the contents of those certificates.

1. In the system web interface, go to **Security** > **Certificates**.
2. Select the connected device tab.

   The **Certificates** page lists your user-installed certificates. It includes information about which entity a certificate is issued to, who issued it, when it expires, and the certificate type (server, client, or CA).

Delete a Certificate

You can remove user-installed certificates through the system web interface.

When you delete all user-installed certificates, your system reverts to using the factory-installed certificate. This option isn't available if your certificate is provisioned to the system.

NOTE: Deleting system settings by default retains your user-installed certificates, but performing a factory reset removes these certificates.

1. In the system web interface, go to **Security** > **Certificates**.
2. Locate the certificate you want to delete and select **Delete** in the same row as the certificate.

   CAUTION: You can't undo this action.

3. Confirm by selecting **Delete**.

   A message indicates that the system deleted the certificate.

Certificate Revocation

During certificate validation, your system checks whether certificates used for secure communications are revoked by their issuing CAs.

Your system can check certificate revocation status with the following standard method:

Certificate Revocation List (CRL): File containing a list of certificates revoked by their issuing CA. You must manually upload CRLs to your system.

Manually Upload a CRL

You can use CRLs to perform certificate revocation checks on your system.

Uploading a CRL fails unless you install all of the certificates in the issuing CA's chain of trust for that CRL.

This option is not available if your CRL is provisioned to the system.

1. In the system web interface, go to **Security** > **Certificates**.

2. Configure the following settings:

Setting	Description
Revocation Method	To use the CRL revocation method, select **CRL**.
Allow Incomplete Revocation Checks	When enabled, a certificate in the chain of trust validates without a revocation check if no corresponding CRL from the issuing CA is installed.

3. Select **Save**.
4. Select **Upload CRL File** to add a CRL.

   You aren't limited to how many CRLs you can install, but you can only upload 10 at a time.

Successfully-uploaded CRLs display on the page and include information about the issuing CA, when the CRL was updated, and when it's scheduled to update again.

Delete a CRL

You can remove CRLs that were previously uploaded on the Poly G7500, Poly Studio G62, and Poly Studio X series system.

This option is not available if your CRL is provisioned to the system.

1. In the system web interface, go to **Security** > **Certificates**.
2. Under **Revocation**, select **Delete** next to the CRL you want to delete.

Disable the Security Code

By default, you must enter a security code to connect to the system to share or save content, but you can disable it.

- In the system web interface, go to **Security** > **Security Code** and clear the **Enable Security Code** check box.

Enable or Disable Content Saving

Enable or disable content saving from the Content App (formerly Pano App) for users who connect to the primary or secondary network.

When you enable Content Saving, you can save snapshots taken during a content sharing or whiteboard session. Snapshots you take during a content sharing or whiteboards session are erased when you end the content sharing or whiteboard session.

1. In the system web interface, go to **Security** > **Content**.
2. Select or deselect **Allow users to save content from Primary Network** and **Allow users to save content from Wi-Fi Network**.

System Allow List

The allow list enables access to your system web interface and SNMP ports only to IP addresses you specify.

An allow list supports up to 30 addresses (including IPv4 and IPv6 formats) and can only be configured in the system web interface.

NOTE: If your IP addresses are dynamically assigned, make sure the allow list is updated so those hosts can connect to your system.

Add IP Addresses to the Allow List

You can add and edit specific IP addresses to an allow list for your system.

WARNING! Once you save the IP allow list, you can access the system web interface of only those devices on the list. If your current device isn't on the list, you can't access the system web interface for that device. You may have to factory restore the system to regain access.

1. In the system web interface, go to **Security** > **Access**.
2. Select **Enable Allow List**, then **Edit Allow List**.
3. Select address type **IPv4** or **IPv6**.
4. In the **IP Address** field, enter the address of the system you want to add to the allow list.
5. Select **Add**.
6. **Optional:** Repeat steps 4 and 5 for the other IP addresses you want to add to the allow list.
7. Select **Save**.

Delete IP Addresses from the Allow List

You can delete specific IP addresses from the allot list for your system.

1. In the system web interface, go to **Security** > **Access**.
2. Select **Edit Allow List**.
3. Select the check box next to any IP address you want to delete and select **Remove**.

IPv4 Address Formats

The configuration requires a single IP address, a range of addresses, or an IP and netmask. (The netmask represents the number of valid bits of the IPv4 address to use.)

The following are valid IPv4 formats for your system:

- 10.12.128.7
- 172.26.16.0/24

IPv6 Address Formats

For IPv6 addresses, you can use a Classless Inter-Domain Routing (CIDR) notation to represent a range of IP addresses.

The following are valid IPv6 formats for your system:

- ::1
- 2001:db8:abc:def:10.242.12.23
- 2001:db8::/48
- 2001:db8:abcd:0012::0/64
- 2001:0db8:85a3:0000:0000:1234:0abc:cdef

Call Encryption

AES is standard on your system. When enabled, your system automatically encrypts calls with other systems using AES.

A locked padlock icon displays on the connected monitor(s) when a call is encrypted. If a call is unencrypted, you see an unlocked padlock. The padlock may not accurately indicate encryption status if the call is cascaded or includes an audio-only endpoint. To avoid security ambiguity, participants can verbally communicate the state of their padlock icon at the beginning of a call.

The following AES cryptographic algorithms ensure flexibility when negotiating secure media transport:

- H.323 (per H.235.6)
  - AES-CBC-128 / DH-1024
  - AES-CBC-256 / DH-2048
- SIP (per RFCs 3711, 4568, 6188)
  - AES_CM_128_HMAC_SHA1_32
  - AES_CM_128_HMAC_SHA1_80
  - AES_CM_256_HMAC_SHA1_32
  - AES_CM_256_HMAC_SHA1_80

Configure Call Encryption

You can encrypt calls on your system.

1. In the system web interface, go to **Call Configuration** > **Call Settings**.
2. For the **Require AES Encryption for Calls** setting, choose how you want to encrypt calls:
   - **Off**: AES encryption is disabled.
   - **When Available**: AES encryption is used with systems that support it, but the system also allows unencrypted calls.
   - **Required for Video Calls Only**: AES encryption is used in all video calls. Calls with systems that don't support it fail.
   - **Required for All Calls**: AES encryption is used in all types of calls. Calls with systems that don't support it fail.

H.460 Firewall/NAT Traversal

Configure your system for firewall or network address translation (NAT) traversal using the H.460.18 and H.460.19 standards. This includes environments with session border controllers (SBCs).

For example, an endpoint outside your network that's initiating a SIP call connects to an SBC as a remote endpoint. The incoming SIP traffic then traverses a firewall before connecting to the endpoint it's calling inside your network.

Real-time media streams often use UDP for their speeds. If your system is behind a firewall that restricts access to UDP ports, however, you can configure your system for only TCP connections.

⚠ **CAUTION:** Systems deployed outside a firewall are potentially vulnerable to unauthorized access. Visit the Polycom Security section of the Knowledge Base at the Poly Online Support Center for timely security information. You can also register to receive periodic updates and advisories.

Configure the System for H.460 Firewall/NAT Traversal

H.460 firewall/NAT traversal can be necessary if you're calling with a cloud-based conferencing service or your system is outside a corporate network (for example, a home office).

Make sure you register your system with a network device that supports H.460.18 and H.460.19 standards (for example, Poly Clariti Edge).

1. In the system web interface, go to **Network** > **LAN Network**.
2. Go to **Firewall**.
3. Make sure that the **Enable H.460 Firewall Traversal** check box is selected.
4. Verify the firewalls that you traverse allow your system to use outbound TCP and UDP connections.
   - Firewalls with a stricter rule set must allow the system to use at least the following outbound TCP and UDP ports: 1720 (TCP), 14085-15084 (TCP), 1719 (UDP), and 16386-25386 (UDP).
   - Firewalls must allow inbound traffic to the TCP and UDP ports used for outbound traffic.
5. Configure the following settings:

Setting	Description
Fixed Ports	Defines which TCP and UDP ports your system uses for firewall traversal. Enable this option if your firewall isn't H.323 compatible. The system assigns a port range starting with the TCP and UDP ports you specify (port 3230 is where the range begins by default). **NOTE:** For the fixed ports you configure, you must open the corresponding ports on your firewall. For H.323, open TCP port 1720. For SIP, open UDP port 5060, TCP 5060, or TCP 5061 depending on if you're using UDP, TCP, or TLS, respectively, as the SIP transport protocol. Disable this option if your firewall is H.323 compatible or the system isn't behind a firewall.

Setting	Description
TCP Ports UDP Ports	The starting value for the range of TCP and UDP ports the system uses. The system automatically configures the range based on the beginning value you set here. To allow H.323 traffic, you need two TCP and eight UDP ports per connection. You must also open TCP port 1720 on the firewall. To allow SIP traffic, you need TCP port 5060 and eight UDP ports per connection. **UDP port range**: Because systems support ICE, the range of fixed UDP ports is 32. The system cycles through the available ports from call to call. **Fixed ports range and filters**: You might notice that the source port of a SIP signaling message is not in the fixed ports range. When your firewall is filtering on source ports, in the system web interface, go to the **SIP** page and enable **Force Connection Reuse**. When enabled, the system uses port 5060 and 5061 for the source and destination port (these must be open on the firewall).
NAT Configuration	Specifies if the system automatically determines the NAT public (WAN) address. • If the system isn't behind a NAT or is connected to the network through a VPN, set this option to **Off**. • If the system is behind a NAT that allows HTTP traffic, set this option to **Auto**. • If the system is behind a NAT that doesn't allow HTTP traffic, set this option to **Manual**.
NAT Public (WAN) Address	The address callers from outside the LAN use to call your system. If you configured the NAT manually, enter the NAT public address here. You can configure this option only when you set **NAT Configuration** to **Manual**.
NAT is H.323 Compatible	Identifies whether the system is behind a NAT that can translate H.323 traffic. This option is available only when you set **NAT Configuration** to **Auto** or **Manual**.
Address Displayed in Global Directory	Choose whether to display the system's public or private address in the global directory. This option is available only when you set **NAT Configuration** to **Auto** or **Manual**.
Enable SIP Keep-Alive Messages	Specifies whether to regularly transmit keep-alive messages on the SIP signaling channel and on RTP sessions part of SIP calls. Keep-alive messages maintain connections through firewall/NAT devices that are often used at network edges. If your system is in an Avaya SIP environment, it's recommended that you disable this setting to enable calls to fully connect.

6. Select **Save**.

Set Up a Security Banner

You can create a security banner, which is a message that displays before users log in to the system remotely.

1. In the system web interface, go to **Security** > **Security Banner**.
2. Select **Enable Security Banner**.
3. Configure the following settings and select **Save**.

Setting	Description
Banner Text	• **Custom**: Enter any text for the banner. • **DoD**: A default U.S. Department of Defense security banner. You can't change this text.
Remote Access Banner Text	The security banner that displays on the system web interface and command-line API (SSH or telnet). Enter up to 2408 single-byte or 1024 double-byte characters. The text wraps to the next line as you type, but you can press **Enter** anywhere to force a line break.

Simple Certificate Enrollment Protocol (SCEP)

The Simple Certificate Enrollment Protocol (SCEP) enables you to automatically and securely provision multiple endpoints with a digital device certificate.

The system checks the certificate data to obtain digital certificates. If the certificate already exists, SCEP checks the expiry date. If the certificate doesn't exist or is expired, SCEP begins the enrollment process.

NOTE: If you use certificate signing requests / 802.1x to authenticate, delete all older certificates before asking for new SCEP / 802.1x certificates.

Disable and then re-enable 802.1x to allow SCEP settings to sync between your devices. You can maintain network communications through MAC-based authentication allow list or disable 802.1x in the switch port.

All new certificates for your Poly touch controller, Poly G7500, Poly Studio G62, and Poly Studio X video bars will have the same address.

Poly VideoOS 4.2.0 introduces support for SCEP on TC10 and TC8 touch controllers. You can manage certificates using either the system web interface, Poly Lens or the touch controller. In paired mode, SCEP settings automatically sync to the touch controller from your Poly Studio G62, Poly G7500, or Poly Studio X system. In standalone mode, configure SCEP in the Poly TC10 or TC8 web user interface. See the Poly TC10 Admin Guide for touch controller SCEP setup information.

Install a SCEP Certificate

If you already have an SCEP certificate installed in your system, you don't have to disable EAP/802.1x authentication before you install SCEP. Verify your system's certificate settings before you install the service.

NOTE: If installing a SCEP certificate fails at any point during the process, a system reboot is required to bring the system back to a good state.

NOTE: In paired mode, your Poly TC10 or Poly TC8 Touch Controller syncs SCEP settings automatically from your Poly Studio G62, Poly G7500, or Poly Studio X system. Configure or pair the touch controller in a staged network before moving to an 802.1x enabled network. For more information see the Poly TC10 Administrator Guide.

1. From the system web interface, go to **Admin Settings** > **Network** > **LAN Properties** > **LAN Options**.
2. Clear the **Enable EAP/802.1x** check box.
3. Restart the system.
4. Update your system with new software that includes SCEP.
5. Verify the SCEP certificate is installed into the system.
6. Enable EAP/802.1x authentication.

Configuring Simple Certificate Enrollment Protocol (SCEP)

Configure SCEP properties for your Poly system in the system web interface.

1. In the system web interface, go to **Admin Settings** > **Security** > **Certificates**.

2. Click **View and Update**.

3. Select **Enable SCEP** and configure the following settings:

Settings	Description
SCEP URL	The URL of the SCEP server
SCEP Challenge Password	Password configured in the SCEP server to generate a certificate.
Automatic Renewal	The automatic renewal period before certificates expire. You can choose the period based on the number of days or percentage of time left.
Threshold Days	The number of days left before expiration to renew the certificate.
Enrollment Retry Attempts	The number of times a certificate tries to enroll.
Renewal Retry Attempts	The time interval that a certificate tries to renew.
CA Profile	The profile in the server set by the administrator.
Certificate Key Size	The certificate key size. Either 2K (2048) or 3K (3072).
Common Name	The system accepts an email as a common name.
Organizational Unit	The unit of business defined by your organization.
Organization	Your organization’s name.
City or Locality	Your organization’s city.
State or Province	Your organization’s state or province.
Country	Your organization’s country.
Email	Your organization's email.

4. Select **Save**.

Web Proxies

A web proxy can help your system communicate outside your network securely and with increased performance. For example, you can direct your system's outbound requests through an enterprise proxy.

Configure your system to use a proxy one of the following ways:

- **Automatic**: Specify only the proxy credentials (if needed). Using DHCP, your system obtains a URL to automatically download a proxy auto-configuration (PAC) file.
- **Semi-automatic**: Specify the proxy credentials and URL for automatically downloading a PAC file.
- **Manual**: Specify the proxy address, port, and credentials. (This method lets you configure your system with only one proxy.)

If your configuration includes automatically downloading a PAC file, there must be an expiration associated with the file so the system knows when to download a new one. Make sure your PAC file server includes an `Expires` header in its HTTP response (for example, **Expires: Wed, 30 Oct 2016 09:30:00 GMT**).

Your system can authenticate with a proxy using the following methods:

- Digest authentication (with either MD-5 or SHA-256 digest)
- NTLM authentication (only NTLMv2 is supported)
- Basic authentication (this insecure method is disabled by default)
- No authentication (or null authentication, meaning the proxy server doesn't require credentials)

Your system supports the following services when configured to use a web proxy:

- Directory servers
- Provisioning service
- Software updates

Enable the System to Use a Web Proxy

By default, your system configuration doesn't use web proxies.

1. In the system web interface, go to **Network** > **LAN Network** > **Web Proxy Settings**.
2. Select **Enable Web Proxy**.

Set Up Automatic Web Proxy Configuration

With automatic web proxy configuration, your system obtains a URL for downloading a proxy auto-configuration (PAC) file through DHCP option 252.

1. In the system web interface, go to **Network** > **LAN Network** > **Web Proxy Settings**.
2. Select **Automatic Configuration**.

3. Select **Enable WPAD**.

   This option enables the web proxy auto-discovery protocol (WPAD), which helps your system automatically download the PAC file on your network using DHCP option 252.

4. Enter the **Proxy User Name** and **Proxy Password**.

5. Select **Save**.

Your system automatically downloads and reads the PAC file specifying the proxy rules. The system also automatically downloads subsequent files before the current file expires.

Set Up Semi-Automatic Web Proxy Configuration

With semiautomatic web proxy configuration, you must specify the URL your system uses to download a proxy auto-configuration (PAC) file.

1. In the system web interface, go to **Network** > **LAN Network** > **Web Proxy Settings**.

2. Select **Automatic Configuration**.

3. If checked, clear the **Enable WPAD** check box.

4. Enter the **Proxy User Name** and **Proxy Password**.

5. Enter the **PAC URL** from which your system downloads the PAC file.

6. Select **Save**.

Your system automatically downloads and reads the PAC file specifying the proxy rules. The system also automatically downloads subsequent files before the current file expires.

Manually Update the PAC File on the System

Even if you set up your system for automatic or semi-automatic web proxy configuration, you can still manually download a new PAC file from the server.

The PAC file may update on the server much sooner than its expiration date. In this situation, you don't have to wait for the system to automatically download the latest version.

1. In the system web interface, go to **Network** > **LAN Network** > **Web Proxy Settings**.

2. Select **Update PAC File** to fetch the latest version of the file from the server.

Manually Configure a Web Proxy

You can manually configure your system to communicate with a web proxy by providing a proxy address, port, and credentials (if required).

This method lets you configure your system with only one proxy.

1. In the system web interface, go to **Network** > **LAN Network** > **Web Proxy Settings**.

2. If checked, clear the **Automatic Configuration** check box.

3. Enter the **Proxy Address** and **Proxy Port**.

4. Enter the **Proxy User Name** and **Proxy Password**.

5. Select **Save**.

Sample PAC File

A proxy auto-configuration (PAC) file is a text file that instructs your system to forward traffic to a proxy server.

The following code shows a sample PAC file.

```
function FindProxyForURL(url, host){if ( url.substring (0,
5) == "http:" ){return "PROXY 10.221.77.3:8080; PROXY
10.221.76.7:8080;DIRECT";} else if ( url.substring (0,
6) == "https:" ){return "PROXY 10.221.77.3:8080; PROXY
10.221.76.7:8080;DIRECT";}else{return "DIRECT";} }
```

The Function "`function FindProxyForURL(url, host)`" returns a string with one or more access method specifications. These specifications cause your system to use a particular proxy server or connect directly.

This function instructs your system to retrieve information for http / https protocols using the first proxy, that is "PROXY 10.221.77.3:8080".

If "PROXY 10.221.77.3:8080" is unreachable/unresponsive, then your system tries the second proxy, that is "PROXY 10.221.76.7:8080".

For more examples on PAC syntax, refer to Proxy Auto-Configuration (PAC) file.

PAC file limitations:

- If the first specified proxy is reachable and the authentication is unsuccessful, your system doesn't try a different proxy path.
- The PAC file must contain pure JavaScript.
- Poly recommends your PAC files use the `.pac` or `.proxy` extension.
- Poly supports PAC JavaScript functions that return "`PROXY host:port`" and "`DIRECT`". Poly doesn't support return values of "`SOCKS`", "`HTTP host:port`", or "`HTTPS host:port`".

View Connections to the System

Access a list of current connections to your system.

The list provides the following information:

- Type of connection (for example, web)
- ID associated with the session (for example, admin or user)
- Remote address (IP addresses of the hosts accessing your system)

This list doesn't show details related to sharing content. For example, if someone shares a video from an HDMI-connected laptop, you don't see that this device is connected to the system.

- In the system web interface, go to **Diagnostics** > **Sessions**.

System Port Usage

The following table lists the inbound, outbound, and bidirectional ports used by your system.

Table 7-3 System Port Usage

Port	Direction	Type	Protocol	Function	Open by Default?	Configurable Port?
22	Inbound	Static	SSH	Command-line API access over SSH	No	No
23	Inbound	Static	TCP	Command-line API access over telnet	No	No
24	Inbound	Static	TCP	Command-line API access over telnet	No	No
53	Outbound	Static	UDP	DNS	Yes	No
80	Inbound	Static	TCP	HTTP web server listener that provides access to the web interface. Redirects all sessions to HTTPS on port 443. Also used by AirPlay.	Yes	Yes
123	Outbound	Static	UDP	NTP (automatic time synchronization)	Yes	No
161	Inbound	Static	UDP	SNMP reporting	No	Yes

Table 7-3 System Port Usage (continued)

Port	Direction	Type	Protocol	Function	Open by Default?	Configurable Port?
443	Bidirectional	Static	TCP/SCTP	Static TCP HTTPS web server listener that provides TLS access to the web interface. AirPlay Microsoft Exchange Server Zero Touch Onboarding Provisioning (for example, Poly Clariti Manager) Video system control using a Poly TC8 or TC10 device Video system control using a Poly Trio system REST API Polycom Content App Poly Lens Poly software download URL `downloads.polycom.com` (3.13.1 and prior) `swupdate.lens.poly.com` (3.14.0 and later)	Yes	No
514	Outbound	Static	UDP	Remote logging	No	Yes
554	Inbound	Static	TCP, UDP	AirPlay (Real-Time Streaming Protocol [RTSP])	No	No
601	Outbound	Static	TCP	Remote logging	No	Yes
853	Outbound	Static	TLC-encrypted TCP	DNS-over-TLS (DoT) operation. For more information, see https://developers.google.com/speed/public-dns/docs/dns-over-tls.	Yes	No
1718	Outbound	Static	UDP	H.255.0 gatekeeper discovery	No	No

Table 7-3 System Port Usage (continued)

Port	Direction	Type	Protocol	Function	Open by Default?	Configurable Port?
1719	Bidirectional	Static	UDP	H.255.0 RAS signaling	No	Yes (outbound) No (inbound)
1720	Bidirectional	Static	TCP	H.255.0 call signaling	Yes	No
1900	Inbound	Static	UDP	AirPlay/Bonjour (Simple Service Discovery Protocol [SSDP])	Yes	No
2000	Inbound	Static	UDP	Multicast pairing	Yes	No
3689	Inbound	Static	TCP	iTunes Music Sharing/AirPlay (Digital Audio Access Protocol [DAAP])	Yes	No
4100–4115	Bidirectional	Static	TCP	AirPlay (audio control)	Yes	No
4100–4115	Inbound	Static	UDP	AirPlay (audio data)	Yes	No
4443	Bidirectional	Static	TCP/TLS	Web server for peripheral device software downloads and log uploads	Yes	No
5001	Inbound	Static	TCP/TLS	Polycom Content App Polycom Content App support removed in Poly VideoOS 4.3.0 This port is no longer active on the system.	No	No
5060	Bidirectional	Static	TCP or UDP, depending the on configuration	SIP	Yes	No
5061	Bidirectional	Static	TLS	SIP	Yes	No
5297	Inbound	Static	TCP	Bonjour	Yes	No
5298	Inbound	Static	TCP	Bonjour	Yes	No
5353	Inbound	Static	UDP	Bonjour/AirPlay (multicast Domain Name System [mDNS])	Yes	No
6514	Outbound	Static	TLS	Remote logging	No	Yes
7000	Inbound	Static	TCP	AirPlay standard services	Yes	No
7080	Inbound	Static	TCP	Web services	Yes	No

Table 7-3 System Port Usage (continued)

Port	Direction	Type	Protocol	Function	Open by Default?	Configurable Port?
7081	Inbound	Static	TCP	Web services	Yes	No
7100	Inbound	Static	TCP	AirPlay mirroring services	Yes	No
16384–32764	Bidirectional	Dynamic	UDP	RTP/RTCP (video and audio streams)	Yes	Yes
18888	Inbound	Static	TCP	Modular room messaging	Yes	No
44444	Inbound	Static	TCP	Content stream	Yes	No
47000	Inbound	Static	TCP	AirPlay casting services	Yes	No
49152–65535	Bidirectional	Dynamic	TCP	H.245	Yes	Yes
49159	Inbound	Static	UDP	Bonjour/AirPlay (mDNS [Windows])	Yes	No
49163	Inbound	Static	UDP	Bonjour/AirPlay (mDNS [Windows])	Yes	No

Wireless Port Usage with Miracast-Certified Devices

A Miracast-certified device uses an ad-hoc, peer-to-peer Wi-Fi connection (known as Wi-Fi Direct) to share content on your system.

The following tables describe the Wi-Fi network ports used by 1) Miracast-certified devices connected to your system and 2) the system when connected to a Miracast-certified device.

NOTE: Highly secure environments may restrict network activity using client firewalls or Group Policy (GPO), which can block access to Miracast functionality and cause connection issues. To avoid these problems, your GPO must explicitly allow Wi-Fi Direct groups and connections to ad-hoc networks.

It's also recommended that you don't restrict the following ports on the Wi-Fi adapter of a Miracast-certified device intended to share content.

Table 7-4 Miracast-Certified Device Ports for Wi-Fi Direct Connections

Port	Direction	Type	Protocol	Function	Note
1024-65535	Outbound	Dynamic	UDP	RTP (video and audio mirroring)	Randomly assigned by the client.
1024-65535	Bidirectional	Dynamic	UDP	RTCP (RTP transportation quality report)	Randomly assigned by the client.
7236	Bidirectional	Static	TCP	RTSP (Miracast display negotiation)	

Table 7-5 System Ports for Wi-Fi Direct Connections

Port	Direction	Type	Protocol	Function	Note
1024-65535	Bidirectional	Dynamic	TCP	RTSP (Miracast display negotiation)	Randomly assigned by the system.
14000, 14002, 14004, 14006	Inbound	Static	UDP	RTP (video and audio mirroring)	Ports 14002, 14004, and 14006 are used when there's more than one device connected to your system.
14001, 14003, 14005, 14007	Bidirectional	Static	UDP	RTCP (RTP transportation quality report)	Ports 14003, 14005, and 14007 are used when there's more than one device connected to your system.

8 Configuring Call Settings

Specify how you want your system to handle and manage calls.

Configure Call Settings

You can configure call settings in the system web interface.

1. In the system web interface, go to **Call Configuration** > **Call Settings**.
2. Configure the following settings:

Setting	Description
Maximum Time in Call	Sets the maximum number of hours allowed for a call. When the maximum time expires, the system prompts the user to hang up. If the user doesn't answer within one minute, the call automatically ends. If the user chooses to stay in the call, the system doesn't prompt the user again.
Auto Answer Point-to-Point Call	Specifies whether the system answers an incoming call when not in a call. Choose one of the following options: • **Yes**: The system automatically answers incoming point-to-point calls. • **No**: Users must answer incoming calls manually. • **Do Not Disturb**: The system rejects incoming calls without notification.

Setting	Description
Auto-Merge Incoming Call to Current Call	Specifies whether the system automatically answers, provides a notification on the local interface, or ignores an incoming audio or video call while you're in an active call. When you merge an incoming call, it joins the incoming call with the current active call participants. This is only applicable to incoming SIP and H.323 calls. Choose one of the following options: • **Yes**: The system automatically answers and merges an incoming audio or video call to the existing call. Incoming video calls are audio only once they merge with the active call. You can only merge a single incoming call with an active call. If the system receives additional incoming calls, they're rejected without notification. • **No**: The system doesn't automatically answer the incoming call, and the system displays a notification on the local interface prompting you to answer or ignore the call. • **Do Not Disturb**: The system rejects incoming calls without notification.
Display Icons in a Call	Specifies whether to display onscreen graphics, including icons and help text, during calls.
Enable Flashing Incoming Call Notification	Specifies whether you see an incoming call notification.
Preferred 'Place a Call' Navigation	Specifies the default options that display on the local interface **Place a Call** screen. Choose one of the following options: • **Keypad**: Displays recently-dialed numbers and a dialpad. • **Contacts**: Displays a screen for searching a directory. The multitiered directory (LDAP) root entry displays at the top of the **Contacts** list, which combines your search results and favorites. • **Recent Calls**: Lists previous calls in chronological order.
Require AES Encryption for Calls	Specify how you want to encrypt calls: • **Off**: AES encryption is disabled. • **When Available**: AES encryption is used with systems that support it, but the system also allows unencrypted calls. • **Required for Video Calls Only**: AES encryption is used in all video calls. Calls with systems that don't support it fail. • **Required for All Calls**: AES encryption is used in all types of calls. Calls with systems that don't support it fail.

3. Select **Save**.

Configure Dialing Options

You can specify video and audio dialing preferences for your system.

1. In the system web interface, go to **Call Configuration** > **Dialing Preference**.
2. Configure the following settings (your changes save automatically):

Setting	Description
Scalable Video Coding Preference (H.264)	This read-only setting indicates your system uses only AVC conferencing. NOTE: Scalable video coding (SVC) conferencing isn't supported.
Enable H.239	Enables the use of a standards-based specification for parallel video streams (people and content). Enable this setting if you know call participants support H.239.
Enable Audio-Only Calls	Enables you to place audio-only calls on the system.
Call Type Order	Specifies an order preference for video or voice calls. Select either **Video then Phone**, or **Phone then Video**. This setting is read-only if the video system has no phone connections.
Video Dialing Order Preferences	Specifies how the system places video calls to directory entries with more than one type of number. Select one of the following protocols for each preference: • **SIP** • **IP H.323** This setting also determines how the system places video calls from the **Place a Call** screen when your set the call protocol to **Auto** or if it's unavailable. For example, if a call doesn't connect with H.323, the system tries using SIP.
Audio Dialing Order Preferences	Specifies how the system places audio calls to directory entries with more than one type of number. Select one of the following protocols for each preference: • **SIP** • **H.323**

Set Call Answering Mode

You can configure how users answer calls on the system.

1. In the system web interface, go to **Call Configuration** > **Call Settings**.
2. Select one of the following for **Auto Answer Point-to-Point Call**:
   - **Yes**: The system automatically answers incoming calls.
   - **No**: Users must answer incoming calls manually.
   - **Do Not Disturb**: The system rejects incoming calls without notification.

Set Preferred Call Speeds

You can configure call speeds in the system web interface.

1. In the system web interface, go to **Call Configuration** > **Dialing Preference**.
2. Configure the following settings (your changes save automatically):

Table 8-1

Setting	Description
Preferred Speed for Placed Calls	Determines the IP call speed your system uses when either of the following occurs: ● A user sets the call speed to **Auto** on the **Place a Call** screen. ● A user places a call from the directory. If the far-site system doesn't support the selected speed, the system automatically negotiates a lower speed.
Maximum Speed for Received Calls	The system doesn't receive calls at a higher rate than the speed you set here.

Configure the Recent Calls List

You can display recent calls on the **Place a Call** page in the system web interface.

The recent calls list includes the following information:

- Name or number
- If the system placed or received the call
- Date and time

1. In the system web interface, go to **Call Configuration** > **Recent Calls**.
2. Configure the following settings (your changes save automatically):

Setting	Description
Call Detail Report	Call detail record (CDR) information is in the system logs. When disabled, the system doesn't write call information.
Enable Recent Calls	Specifies whether to show recent calls on the local interface and the system web interface.
Maximum Number to Display	The maximum number of calls the system displays in the recent calls list.

Clear Recent Calls

You can clear the recent calls list from the system web interface.

1. In the system web interface, go to **Call Configuration** > **Recent Calls**.
2. For **Clear Recent Calls**, select **Clear** and confirm your choice.

9 Configuring Audio Settings

You can configure audio settings in the system web interface.

Configure General Audio Settings

You can specify general audio settings for your system.

If you are in a call with a far site that is sending audio in stereo mode, you can receive in stereo. In calls where some sites can send and receive stereo but some can't, any site set up to send or receive stereo can do so.

1. In the system web interface, go to **Audio/Video** > **Audio** > **General Audio Settings**.
2. Configure the following settings (your changes save automatically):

Setting	Description
Polycom StereoSurround	Enables Polycom StereoSurround software for all calls. NOTE: Enabling this setting disables Polycom Acoustic Fence technology and vice versa. This feature isn't available on the Studio X30 system. It also isn't available when using a Poly Microphone IP Adapter with your system.
Sound Effects Volume	Sets the volume level of the ringtone.
Ringtone	Specifies the ringtone for incoming calls.
Audio Mute Auto-Answered Calls	Specifies whether to automatically mute incoming calls. NOTE: You must first enable **Auto Answer Point-to-Point Video** in **Call Settings** to use this feature.
Enable M-Mode	Specifies whether the system transmits audio using a configuration that best reproduces interactive and live performance music picked up by microphones. This feature provides the highest-possible bandwidth for audio. When you enable M-Mode, even the faintest musical notes come through clearly.
Enable NoiseBlockAI	Enables Poly NoiseBlockAI, which during a call eliminates background and extraneous sounds in common working environments. NOTE: This setting is disabled when you enable M-Mode. If you use an external echo canceller, keyboard noise reduction isn't available.

Setting	Description
Enable Join and Leave Tones	The system plays a tone when someone joins or leaves a conference call.
Transmission Audio Gain (dB)	Specifies the audio level (in decibels) that the system transmits sound. Unless otherwise advised, you should set this value to 0 dB.
Enable Audio Mute Reminder	Specifies if the system displays a notification that the microphones are muted when it detects someone speaking.

Audio Input

You can connect several types of microphones to your system.

The following audio inputs are supported:

- IP-based Poly microphone peripherals (for Poly Studio G62, Poly Studio X72, and Poly G7500 systems only):
  - **Poly IP Table Microphone**
  - **Poly IP Ceiling Microphone**
  - **Poly Microphone IP Adapter**
- **Built-in microphones**: The built-in microphones that come with the Poly Studio X72, Poly Studio X70, Poly Studio X52, Poly Studio X50, and Poly Studio X30 systems.
- **Poly Studio Table Microphone (formerly Polycom RealPresence Debut Expansion Microphone)** (Poly Studio X72, Poly Studio X70, Poly Studio X52, and Poly Studio X50 system only)
- **3.5 mm** (not available on Poly Studio X52 or Poly Studio X30 systems): 3.5 mm input used to share audio from a device or microphone. Depending on your setup, you can specify if sound from this input plays in the room and at far sites or just at far sites.
- **HDMI**: Used to share audio (along with content) from a device. Sound from this input plays in the room and at far sites.

Configure IP Microphones

You can configure IP table and ceiling microphone settings for your Poly Studio G62 and Poly G7500 systems.

1. In the system web interface, go to **Audio/Video** > **Audio** > **Audio Input**.
2. Configure the following settings (your changes save automatically):

Setting	Description
Stereo Mode	Positions the audio input within the left and right channels. **Left** sends all of the audio to the left channel. **Right** sends all of the audio to the right channel. For Poly table microphone and ceiling microphones, **Left+Right** sends audio from one microphone element to the left channel and audio from a second element to the right channel.
Autorotation	Specifies whether the system uses autorotation for Poly microphones. If you enable this feature, the system automatically assigns left and right channels for the microphone based on the sound it senses from the left and right speakers.

Configuring the Microphone Adapter

The video system automatically configures Poly Microphone IP Adapter when you pair it.

The Poly Studio X72, Poly Studio X70, Poly Studio X52, Poly Studio X50, and Poly Studio X30 systems don’t support the microphone adapter.

Note the following when using the microphone adapter:

- You can't use Poly IP table and ceiling microphones.
- The audio input level (mono channel meter) displays in the local interface and system web interface.
- Polycom StereoSurround isn't available.
- Polycom Acoustic Fence technology isn't supported.
- The RealPresence Group Series microphone array configuration uses stereo audio by default, but the microphone adapter supports only mono mode.

Polycom Acoustic Fence

Polycom Acoustic Fence technology creates a virtual *audio fence* that blocks sounds from outside the fence. It suppresses background noise during calls to enhance audio quality for call participants.

Polycom Acoustic Fence technology provides the following:

- Mutes sounds outside the fence when no one is speaking inside it
- Lowers sounds outside the fence by 12 dB when someone is speaking inside it
- Mutes speakers when someone leaves the fenced area
- Enables you to adjust the width of the audio fence *beam* to define the area where sounds are picked up

For Poly Studio X systems:

Once you enable Polycom Acoustic Fence on your Poly Studio X72, Poly Studio X70, Poly Studio X52, Poly Studio X50, and Poly Studio X30 system, you can also adjust the width of the audio fence beam so that the system's built-in microphones pick up sound in the area you want.

For G7500 Systems:

Once you enable Polycom Acoustic Fence, you must set up additional hardware to use this feature with your G7500 system. You need a primary microphone and at least one more microphone to create the fence.

The boundary radius can be two to several feet around the following Poly peripheral devices:

- Table microphone
- Ceiling microphone

NOTE: Microphones connected to a Poly Microphone IP Adapter currently don't support Polycom Acoustic Fence.

Once you set up the microphones, you can adjust the width of the audio fence beam to limit or expand where sounds are picked up inside the fence.

For more details on Polycom Acoustic Fence, search the Polycom Knowledge Base for *acoustic fence*.

For Poly Studio G62 Systems:

Once you enable Polycom Acoustic Fence, you must set up additional hardware to use this feature with your Poly Studio G62 system. You need a primary microphone and at least one more microphone to create the fence.

The boundary radius can be two to several feet around the following Poly peripheral devices:

- Table microphone
- Ceiling microphone

NOTE: Microphones connected to a Poly Microphone IP Adapter currently don't support Polycom Acoustic Fence.

Once you set up the microphones, you can adjust the width of the audio fence beam to limit or expand where sounds are picked up inside the fence.

For information on setting up Polycom Acoustic Fence, see https://docs.poly.com/bundle/video-room-prep-guide/page/specify-the-primary-and-fence-microphones.html .

Configure Polycom Acoustic Fence

You can enable and configure the Polycom Acoustic Fence feature to help define the *audio fence* around the system.

NOTE: This option isn't available if you enable Polycom StereoSurround.

1. In the system web interface, go to **Audio/Video** > **Audio** > **General Audio Settings**.
2. Select the **Enable Acoustic Fence** check box.
3. Set **Acoustic Fence Sensitivity** to adjust the width of the audio fence beam.
   - **For Studio X Family systems**: Higher values increase the width of the audio fence beam. Use `1` for the narrowest beam (12 degrees) or `10` for the widest beam (120 degrees). The total angle is the setting number multiplied by 12.

     If **Acoustic Fence Sensitivity** is set to `0`, the system mutes the built in microphone and any supported echo canceling external microphone connected to the system. Setting the sensitivity level to `0` doesn't mute the 3.5 mm or USB audio in input.
   - **For G7500 systems**: Higher values increase the width of the audio fence beam between the primary and fence microphone(s). Use `0` for the narrowest beam (+/- 10 degrees) or `10` for the widest beam (+/- 60 degrees).
   - **For Poly Studio G62 systems**: Higher values increase the width of the audio fence beam between the primary and fence microphone(s). Use `0` for the narrowest beam (+/- 10 degrees) or `10` for the widest beam (+/- 60 degrees).

Specify the Primary and Fence Microphones

To use Polycom Acoustic Fence technology with your Poly Studio G62 or Poly G7500 system, you need a primary microphone to pick up audio and one or more fence microphones to define the audio boundary.

The system considers the first microphone you pair as the primary microphone. By default, a microphone pairs to the system when you connect it (unless you've disabled automatic pairing). You can connect up to three microphones directly to your system.

NOTE: If you use a mix of table and ceiling microphones, the primary microphone must be a table microphone. The primary microphone can be a ceiling microphone if you use only that type of microphone.

1. Connect the primary microphone to an **LLN** port on the back of your system.

   IMPORTANT: When using Polycom Acoustic Fence technology, remember which microphone is the primary one. If you disconnect this microphone, Polycom Acoustic Fence no longer works and you must reconnect all microphones (starting with the primary microphone) for it to work again.

2. Connect the other microphone(s).

Specify a Different Primary Microphone

If you want to change the primary microphone you're using for Polycom Acoustic Fence technology, you must first disconnect all the microphones from your Poly Studio G62 or Poly G7500 system.

NOTE: If you use a mix of table and ceiling microphones, the primary microphone must be a table microphone. The primary microphone can be a ceiling microphone if you use only that type of microphone.

1. Disconnect all microphones from the **LLN** ports on the back of your system.
2. Reconnect the microphone you want to be the primary.

   Your primary microphone is set up.
3. Connect the other microphone(s).

Your system is ready to use Polycom Acoustic Fence with a new primary microphone.

Poly NoiseBlockAI v2

Poly recommends you use Poly NoiseBlockAI v2 in large rooms and rooms with reflective surfaces such as tables and glass walls.

NOTE: The addition of Sound Reflection Reduction as a NoiseBlockAI option changes the NoiseBlockAI parameter from `voice.noiseSuppression.enable` to `audio.noiseblockaioptions`.

Poly NoiseBlockAI v2 incorporates Poly Sound Reflection Reduction. This feature uses advanced AI and machine learning to identify and reduce distracting noises and reverberations for the far end.

Poly NoiseblockAI v2 supported configurations

NOTE: Disable noise reduction on your DSP when using Sound Reflection Reduction or NoiseBlockAI options.

NOTE: On the system, NoiseBlockAI v2 applies, when enabled, to the current active conference microphone.

The same control for choosing NoiseBlockAI, NoiseBlockAI v2, or Off applies to only one of these pathways automatically based on the audio configuration connected.

Sound Reflection Reduction supports the following configurations:

- When you disable Polycom StereoSurround, you can use Sound Reflection Reduction. If you enable Polycom StereoSurround the system uses NoiseBlockAI.
- On Poly Studio X systems using:
  - Built-in microphones
  - Poly expansion microphone
  - Poly IP microphones
  - Poly Trio C60
  - USB audio DSP
- On Poly G7500 using:
  - Poly IP table or ceiling microphones
  - Poly Trio C60
  - USB audio DSP
- On Poly Studio G62 using:
  - Poly IP table or ceiling microphones
  - Poly Trio C60
  - USB audio DSP
  - 3.5 mm input

Enable NoiseBlockAI v2

Eliminate echoes heard on the far end due to room conditions and materials by enabling Sound Reflection Reduction V2.0.

1. In the system web interface, go to **Audio / Video** > **Audio** > **NoiseBlockAI Options**.
2. In the drop-down menu, select **NoiseBlockAI v2**.

Live microphone switching

Configure your system to automatically toggle the microphone input between the system's built-in microphones and a Poly Studio table microphone (formerly known as RealPresence Debut expansion microphone).

The system detects which microphone is picking up the strongest audio input from the speaker and automatically changes to that microphone. For example, if you frequently walk behind your unit you

can place the Poly Studio table microphone behind your system to catch your voice as you walk around.

Configure microphone switching on Poly Studio X systems

You can enable the ability to switch between a built-in microphone that comes with the Poly Studio X72, Poly Studio X70, and Poly Studio X52, or Poly Studio X50 and a Poly Studio table microphone (formerly known as the RealPresence Debut expansion microphone).

1. In the system web interface, go to **Audio/Video** > **Audio** > **General Audio Settings**.
2. Select the **Enable Auto Mic Switching** check box (your changes save automatically).

Configure HDMI Audio Input

You can specify the audio input level for your system's HDMI connections (for example, audio from an HDMI-connected laptop).

NOTE: When HDMI Input is set as People source, the HDMI audio is not captured or transmitted to the far side. If HDMI audio is required in this configuration, use another available input source such as USB or 3.5 mm.

1. In the system web interface, go to **Audio/Video** > **Audio** > **Audio Input** > **HDMI**.
2. For **Audio Input Level**, set the left and right channel levels by choosing a value from `0` to `10`.

   The audio meters display the input's left and right channel levels.

Configure 3.5 mm audio input

Specify how the system routes and controls audio from the 3.5 mm input.

NOTE: If you connect a DSP using 3.5 mm the system will not reflect the mute states of the DSP microphones. Only USB-connected DSPs will properly reflect the mute state. The USB connection provides the necessary data channel for the sharing of this type of information.

1. In the system web interface, go to **Audio/Video** > **Audio** > **Audio Input** > **3.5 mm**.

   NOTE: When you connect a 3.5 mm audio device, make sure that **USB Audio** isn't enabled. Enabling USB audio when you have a 3.5 mm audio device connected may result in echoes on the far side.

2. For **Audio Input Level**, set the left and right channel levels by choosing a value from `0` to `10`.

   The audio meters display the input's left and right channel levels.

3. Choose one of the following **Playback Options**:

   Table 9-1 Playback Options

Option	Description	Result
Play back to All Locations	Select this option if you're sending audio from a device.	• Near and far sites hear the 3.5 mm input. • You can't mute audio or control echo cancellation.

Table 9-1 Playback Options (continued)

Option	Description	Result
Play back to Far Sites	Select this option if you're using an external digital signal processor (DSP), such as Polycom SoundStructure, which provides mute controls and echo cancellation.	• Only far sites hear the 3.5 mm input (there is no associated video content). • You can't mute audio or control echo cancellation through the system.
Play back to Far Sites, Mute Controlled	Select this option if you want to perform activities like sharing music from a mobile phone to call participants.	• Only far sites hear the 3.5 mm input (there is no associated video content). • You can mute audio but can't control echo cancellation.
Play back to Far Sites, Mute Controlled, Echo Canceled * (Poly Studio G62 and Poly G7500 only)	Select this option if you're using a line-level microphone. NOTE: The microphone must provide the line-level signal to work.	• Only far sites hear the 3.5 mm input (there is no associated video content). • You can mute audio and control echo cancellation. • Mic-level inputs aren't supported. • You can use NoiseblockAI or Sound Reflection reduction.

4. Verify that **USB Audio** is disabled.

Using Poly Trio Microphones

The video system automatically configures Poly Trio microphones when you pair the phone.

You can only use the following microphones in addition to the Poly Trio microphones:

- Poly Trio Expansion Microphones
- The Poly Studio X72, Poly Studio X70, Poly Studio X52, Poly Studio X50, and Poly Studio X30 built-in microphones for speaker locating only.

Also note the following when using Poly Trio microphones with your video system:

- You can't use Poly IP audio devices, including table and ceiling microphones and the microphone adapter.
- Polycom Acoustic Fence technology isn't available.
- Polycom StereoSurround isn't available.
- The audio input level (mono channel meter) displays in the local interface and system web interface.
- You can pair up to four Poly Trios C60 with your system in supported provider modes.
- You can't use a Poly Trio if your system is connected to Wi-Fi as the primary network.
- The built-in microphones don't transmit but may indicate activity in the system web interface.

Configure NoiseBlockAI When Paired with Poly Trio

To use Poly NoiseBlockAI when paired with a Poly Trio, enable the setting on your video system. There's nothing to configure on the phone.

1. In the system web interface, go to **Audio/Video** > **Audio** > **General Audio Settings**.
2. Select the **Enable Keyboard Noise Reduction and NoiseBlock** check box.

Configuring the Microphone Adapter

The video system automatically configures Poly Microphone IP Adapter when you pair it.

The Poly Studio X72, Poly Studio X70, Poly Studio X52, Poly Studio X50, and Poly Studio X30 systems don't support the microphone adapter.

Note the following when using the microphone adapter:

- You can't use Poly IP table and ceiling microphones.
- The audio input level (mono channel meter) displays in the local interface and system web interface.
- Polycom StereoSurround isn't available.
- Polycom Acoustic Fence technology isn't supported.
- The RealPresence Group Series microphone array configuration uses stereo audio by default, but the microphone adapter supports only mono mode.

Audio Output

You have different options to play audio on your system to fit your setup.

You can use the primary monitor's built-in speakers, the Studio X Family systems' built-in speakers, or you can connect an external speaker system (such as Polycom StereoSurround kit) to the Poly G7500, or a JBL Pro Soundbar to a Poly Studio G62 system to provide more volume and comprehensive sound in large rooms.

See your system setup sheet for connection details. Make sure that you power off the system before connecting anything to it.

Configure audio output for HDMI and 3.5 mm audio

You can choose a specific output configuration for HDMI and 3.5 mm audio.

Starting with VideoOS 4.1.0, you have three options for HDMI and 3.5 mm audio out from your G7500 system. If your configuration uses the 3.5 mm audio output, choose **Line Out** or **TV Speakers and Line Out**.

1. In the system web interface, go to **Audio / Video** > **Audio** > **Audio Output**.
2. Choose from:
   - **TV Speakers**: Sound is sent to the speakers on the monitor connected to HDMI port 1 on the system. The 3.5 mm audio output is turned off.
   - **Line Out**: Sound is sent through the 3.5 mm audio output. Sound is turned off for the HDMI output.
   - **TV Speakers and Line Out**: Sound is output to the HDMI output and the 3.5 mm audio output.

Changes take effect immediately.

Configure Audio Output Settings on Studio X Systems

You can configure the audio output settings for your system.

1. In the system web interface, go to **Audio/Video** > **Audio** > **Audio Output**.
2. Configure the following settings (your changes save automatically):

Table 9-2 **Audio input settings**

Setting	Description
Primary Audio Volume	Sets the main audio output volume level going to the speakers.
Bass	Sets the volume level for low frequencies without changing the primary audio volume.
Treble	Sets the volume level for high frequencies without changing the primary audio volume.

Table 9-2 Audio input settings (continued)

Setting	Description
Speaker Options	Specifies the speaker output. • **TV Speakers**: Use only the speakers on your connected monitors. • **System Speakers**: Use only the built-in speakers on a Studio X70, Studio X52, Studio X50, and Studio X30 system.

Enable Speaker Volume Boost

If you experience low audio output on your Poly Studio X72, Poly Studio X70 or Poly Studio X52 system, you can use Speaker Volume Boost to increase the system volume.

When you enable Speaker Volume Boost, the system volume increases above the normal maximum output level while also decreasing the bass to prevent distortion.

1. In the system web interface, go to **Audio / Video** > **Audio**.
2. Select the **Speaker Volume Boost** check box.

Using Poly Trio Speakers

When you pair a Poly Trio system with your video system, you can use the phone's speakers as the audio output for the room.

Also note the following when using Poly Trio speakers with your video system:

- You can't use a Poly Trio if your system is connected to Wi-Fi as the primary network.

Choose Speakers When Paired with Poly Trio C60

In or out of a call, you can toggle whether you want to use Poly Trio C60, connected monitor, or video system speakers.

1. In the system web interface, go to **Audio/Video** > **Audio** > **Audio Output**.
2. Choose one of the following **Speaker Options**:
   - **Phone Speakers**: Use only your Poly Trio C60 system speakers.
   - **TV Speakers**: Use only the speakers on your connected monitors.
   - **System Speakers**: Use only the built-in speakers on a Studio X52 or Studio X50 system.

Set the 3.5 mm Audio Output mode

Specify how volume is controlled for a device connected to the line out port.

1. In the system web interface, go to **Audio/Video** > **Audio** > **Line Out**.
2. Choose one of the following **Output Mode** options:
   - **Variable**: Enables users to change the volume.
   - **Fixed**: Sets the volume to the audio level configured for the system.

Connecting a USB Audio Device to the System

Your system supports audio input and output sources through USB connections. When USB audio is enabled, non-USB audio connections aren't supported.

NOTE: If you connect a 3.5mm audio device, make sure that **USB Audio** isn't enabled. Enabling USB audio when you have a 3.5mm audio device connected may result in echoes on the far side.

The system supports connecting one USB audio device. Connecting a second audio capable USB device to the system may result in no audio sent to the primary intended audio device.

For example, you can't connect a USB audio DSP and a USB camera with integrated audio (microphone or speakers) or an audio capable HDMI to USB such as an INOGENI 4K2USB3.

Connect a USB Audio Device to the System

To use a USB audio device with the system, enable USB audio.

1. In the system web interface, go to **Audio/Video** > **Audio** > **General Audio Settings**.
2. Select the **Enable USB Audio** check box.

Using USB and Bluetooth Headsets

You can use USB and Bluetooth headsets with your system (Bluetooth headsets require a USB adapter).

When connected, you can control your headset audio but not the system audio (such as mute or volume control).

Only headsets with the following specifications are supported:

- 48 kHz sample rate
- Dual channels
- 16-bit pulse-code modulation (PCM)

Configure Poly Studio X52 hearing augmentation with Creative Labs Sound Blaster USB

Connect the compatible Creative Labs Sound Blaster USB Type-A to 3.5 mm adapter to a Poly Studio X52 video bar and configure the settings to hear audio with hearing assisted systems.

Hearing augmentation is an associative feature used to support hearing assisted system. When you enable this feature and connect a compatible adapter, both near- and far-end audio is transmitted through the 3.5 mm audio out on the adapter to a hearing assisted system headset.

This feature is only supported using the compatible Creative Labs Sound Blaster PLAY! 3 USB DAC Amp and External Sound Card USB Type-A to 3.5 mm audio adapter.

IMPORTANT: This feature is for audio output only. Do not connect the USB adapter to a microphone.

1. Connect the audio adapter to a USB Type-A port on the video conferencing system.

2. Connect your hearing assisted system equipment to the 3.5 mm audio out port on the adapter.

   For information on setting up your hearing assisted system or using the adapter, consult your manufacturer's documentation.

3. In the Poly Studio X52 system web interface, go to **Audio / Video** > **Audio** and enable **Enable Hearing Augmentation Over USB**.

Using the Shure IntelliMix P300

You can connect a Shure IntelliMix P300 audio conferencing processor to your Poly G7500, Poly Studio X72, Poly Studio X70, Poly Studio X52, or Poly Studio X50 system using a USB-A port (USB-C isn't supported).

Note the following when using this audio processor:

- Once connected to the system, the processor handles all audio.
- You can't use speakers and microphones that aren't connected to the processor.
- The video system automatically disables its internal echo cancellation processing.

Support for QSC Core Series and Biamp Audio Processors

You can connect QSC Core Series and Biamp audio processors to your Poly G7500, Poly Studio X72, Poly Studio X70, Poly Studio X52, or Poly Studio X50 system using a USB-A or USB-C port. This is a preview feature that may be removed or changed in a future release.

NOTE:

- Once connected to the system, the processor handles all audio.
- In Poly provider mode the video system's 3.5mm stereo input will remain active unless you select **Play to Far Sites, Mute Controller, Echo Cancelled**.
- You can't use speakers that aren't connected to the processor.
- The video system automatically disables its internal echo cancellation processing except in Zoom Rooms mode.

Using the EagleEye Cube USB Camera Microphone

With a G7500 system, you can use the Poly EagleEye Cube USB camera as a microphone if you don't connect other microphones to the system.

Enable Poly Trio C60 Speakers and Microphones in Microsoft Teams Mode

Poly Trio C60 microphones are muted by default when the system is using Microsoft Teams Rooms.

Enable the system microphones requires a system restart.

1. In the system web interface, to **Audio/Video** > **Audio** > **General Audio Settings**.
2. Select the **Enable Poly Trio Audio (Speakers and Microphones)** check box, then **Continue** to confirm the restart.

Audio I/O Specifications

The following table provides audio input and output specifications for your system.

Table 9-3 G7500 System Audio I/O Specifications

Characteristic	Value
Maximum input level, line input	+6 dBV (2.0 V_{RMS}), ± 1 dB
Input impedance, line input	45 kΩ, ± 5 %
Maximum output level, line output (≥ 600 Ω load)	+6 dBV (2.0 V_{RMS}), ± 1 dB
Output impedance, line output	150 Ω, ± 5 %
Signal-to-noise ratio: Line input routed to line output	>85 dB, A-weighted
Signal-to-noise ratio: HDMI input routed to either HDMI output	>95 dB, A-weighted
Dynamic range: Line input routed to line output	>85 dB, A-weighted
Dynamic range: HDMI input routed to either HDMI output	>95 dB, A-weighted
Crosstalk and feed-through (any input or output channel to any other channel)	≤-80 dB, 20 Hz to 20 kHz
Frequency response (any input to any output, relative to 997 Hz)	+1, -3 dB, 50 Hz to 20 kHz
Total harmonic distortion + noise vs. frequency	Better than -75 dB, 50 Hz to 20 kHz

10 Configuring Video and Camera Settings

You can configure video settings for your system, including monitors and cameras.

Use the information about supported HDMI I/O resolutions and codec capabilities to optimize your video experience based on your deployment requirements.

HDMI I/O

Your system has HDMI input and output ports.

Your system has the following HDMI connections:

- Output for connecting the primary system monitor (Monitor 1)
- Output for connecting the secondary system monitor (Monitor 2)
  The Studio X30 system doesn't have a second HDMI output.
- Input for content sharing, including audio streaming

Note the following:

- The system supports only HDMI-to-HDMI connections and doesn't support display conversions, such as VGA-to-HDMI or HDMI-to-DVI cable converters.
- The HDMI specifications don't provide maximum cable length definitions. The requirements defined in the specification implicitly give rise to length limitations that are based on the cable's construction.
- As with other Poly hardware, the HDMI ports on your system meet HDMI specification requirements. HDMI signal quality is dependent on every cable and connector in the HDMI path. Passive HDMI extenders, female-female couplers, and wall plates are potential points of failure and signal loss.
- A high-quality passive cable of minimum length provides the most repeatable solution. As the power level of HDMI output devices can vary greatly, keep the distance from the HDMI source to the system input as short as possible.

Poly claims no responsibility or liability for the quality, performance, or reliability of third-party HDMI cables, HDMI splitters, or HDMI USB adapters.

Poly recommends working with your A/V integrator or partner who understands the unique requirements in your environment.

Supported HDMI Output Resolutions for Single-Monitor Setups

Your system supports the following HDMI output resolutions and frame rates when using one monitor.

Table 10-1 **Supported HDMI Output Resolutions and Frame Rates for Single-Monitor Setups**

Output	Resolution	Frame Rates (fps)
UHD (4K)	3840 × 2160p	25, 30, 50, 60
FHD	1920 × 1080p	50, 60

Supported HDMI Output Resolutions for Dual-Monitor Setups

Your system supports the following HDMI output resolutions and frame rates when using two monitors.

NOTE: 4K resolution (3840 × 2160p) isn't supported when you configure your Poly G7500, Poly Studio X70, or Poly Studio X50 system for dual monitors. If you want to use 4K, set Monitor 2 to **Off** in the system web interface.

Table 10-2 Supported HDMI Output Resolutions and Frame Rates for Dual-Monitor Setups

System	Output	Resolution	Frame Rates (fps)
Poly Studio G62, Poly Studio X72, Poly Studio X52	UHD (4K)	3840 × 2160p	50, 60
Poly G7500, Poly Studio X70, Poly Studio X50	FHD	1920 x 1080p	50, 60

Supported HDMI Input Resolutions

The content sharing HDMI interface supports audio streaming. Sharing content from personal computing devices refers to sharing content using a computer with an HDMI connection.

The

Poly G7500, Poly Studio G62, and Poly Studio X series system supports a variety of resolutions.

Table 10-3 Supported HDMI Input Resolutions and Frame Rates

Input	Resolution	Frame Rate(s)
UHD	3840 x 2160p	24, 25, 30
QHD	2560 x 1440p	50, 60
FHD	1920 x 1080p	50, 60
WSXGA+	1680 x 1050	60
UXGA	1600 x 1200	60
SXGA	1280 x 1024	60
HD	1280 x 720p	50, 60
XGA	1024 x 768	60
SVGA	800 x 600	60

Supported HDCI Input Resolutions

The HDCI input resolution is fixed based on the supported Poly camera.

HDCI input applies only to the G7500 system.

Configure Monitor Settings

The system automatically detects the highest-supported setting for the connected monitor.

The system automatically configures monitor settings based on the resolution of the monitor. For example, if you connect the system to a 4K monitor the system sets the monitor output to 4K.

On Poly Studio G7500, Poly Studio X70, and Poly Studio X50 set the second monitor drop-down menu to **Off** to enable 4K output from the HDMI 1 port. If the second monitor is enabled, even if a monitor isn't connected to the HDMI 2 port, the system sets the HDMI 1 output to 1080p.

Support for 4K output is based on the provider application.

The Poly Studio X30 doesn't support dual monitors.

1. In the system web interface, go to **Audio/Video** > **Monitors**.
2. Configure the following settings (your changes save automatically):

Table 10-4 **Monitor Settings**

Setting	Description
Configure Monitor	Specifies monitor settings. • **Automatic**: (Default) Detects the highest-supported resolution of the connected monitors. • **Off**: Disable this monitor (not available for Monitor 1).

Configure a Touch Monitor

In a dual-monitor setup, where one or both are touch monitors, you must configure the touch monitors using the Poly **Settings** menu on the touch monitor.

NOTE: Touch monitors in single-monitor setups don't require configuration. For example, there's no additional touch monitor configuration required if you have a Studio X30 system.

1. On the touch monitor, do one of the following:
   - In a call: Go to **Menu** ☰ > **More** ••• > **Settings** ⚙ > **Diagnostics** > **Touch Configuration**.
   - Out of a call: Go to **Menu** ☰ > **Settings** ⚙ > **Diagnostics** > **Touch Configuration**.
2. On each screen, select the **Hand** icon.
3. Select **Finish Configuration**.

Monitors with CEC

You can use some Consumer Electronics Control (CEC) features with HDMI-connected monitors that support the CEC protocol.

NOTE: If you experience display issues after the system wakes from sleep, disable CEC in the system web interface.

Your system supports the following CEC commands:

- **System Standby**: When the system goes to sleep, connected monitors switch to standby mode to save power.
- **One Touch Play**: You can wake connected monitors with your system remote control.

Remember the following when enabling CEC on your system:

- If you connect a monitor with an HDMI splitter, the splitter must support CEC. Due to HDMI splitter limitations, monitors behind a 1xM (one-input multiple-output) splitter might not switch to the correct input when waking up.
- The system doesn't respond to CEC commands from a monitor remote control.
- If a monitor is connected to two endpoints, the monitor displays the active endpoint when the other is sleeping.

Disable CEC

Disable CEC in the system web interface.

1. In the system web interface, go to **Audio/Video** > **Monitors**.
2. Clear the **Enable Consumer Electronics Control** check box.

Enable CEC

Enable CEC in the system web interface.

Make sure your monitor's CEC settings are configured correctly (see your monitor's documentation).

1. In the system web interface, go to **Audio/Video** > **Monitors**.
2. Select the **Enable Consumer Electronics Control** check box.

Configure General Camera Settings

You can configure settings for cameras connected to your system. The system automatically discovers your camera model and displays the relevant settings in the system web interface.

See the latest *Poly VideoOS Release Notes* for specific information about the cameras you can use with your system.

NOTE: If you connect an unsupported camera, the system still attempts to show video. Poly can't guarantee that the results are optimal or that the available settings are the same as a supported camera.

1. In the system web interface, go to **Audio/Video** > **Video Inputs** > **General Camera Settings**.
2. Configure the following settings:

Table 10-5

Setting	Description
Allow Other Participants in a Call to Control Your Camera	Specifies whether the far site can pan, tilt, or zoom the near-site camera. When you enable this setting, a user at the far site can control the framing and angle of the camera for the best view of the near site. This is also called Far End Camera Control (FECC).
Power Frequency	NOTE: To avoid power frequency issues with your system, choose a location. Specifies the power-line frequency for your system. Your system typically defaults to the correct power-line frequency based on the video standard used in the country where it's located. This setting helps you adapt the system to areas where the frequency doesn't match the video standard. You might also need to change this setting to avoid flicker from fluorescent lights in the room.
Enable Camera Preset Snapshot Icons	Enables the use of snapshot icons that represent camera presets. To see a preset icon, you must enable this setting before configuring the preset.
Camera sleep mode	Specifies a sleep mode for your camera. **Fast Wake Up**: The camera provides an image as soon as the monitor wakes. While asleep, the camera faces forward. • When you set sleep **Display** to **Black**, an image more quickly displays, but be aware that this uses maximum power. • When you set sleep **Display** to **No Signal**, the display synchronizes with the system. This can take a few seconds but may conserve energy depending on the monitor. **Save Energy**: Puts the camera into standby mode to save power (the camera spins to the rear and faces down). This option applies only when a camera is connected to the system (except the EagleEye Producer or EagleEye Director camera). • When you set sleep **Display** to **Black**, it takes a few seconds for the camera to send an image. • When you set sleep **Display** to **No Signal**, the camera is already sending an image by the time the display synchronizes with the system.
Current People Camera	Select the camera or HDMI input to be used for conferencing. NOTE: When HDMI Input is set as People source, the HDMI audio is not captured or transmitted to the far side. If HDMI audio is required in this configuration, use another available input source such as USB Type-A or 3.5 mm TRS input.

Table 10-5 (continued)

Setting	Description
Enable User Camera Selection	Allow the user to select primary camera from the TC8, TC10, or the local interface.

3. Select **Save**.

Reset Camera Settings to Defaults

After changing camera settings, you can quickly reset all camera settings to the default configuration.

1. In the system web interface, go to **Audio/Video** > **Video Inputs**.
2. Select **Reset to Defaults**.
3. Select **Continue**.

   Camera settings reset to the default configuration.

Calibrate EagleEye Producer Group Framing

Calibrate your EagleEye Producer camera to align with your EagleEye camera using the RealPresence Group Series remote (the RealPresence Group Series remote is different from the remote that came with your system). Calibrating the cameras ensures the best view of the room for group framing.

Verify that the EagleEye camera is properly attached to the EagleEye Producer as described in the *Polycom EagleEye Producer Setup Sheet*.

The EagleEye Producer camera must align with the EagleEye IV camera. If the alignment changes, group framing isn't accurate.

1. In the local interface, go to **Menu** > **Camera** > **Select Camera**.
2. Select **EagleEye Producer** as the primary camera.
3. On the RealPresence Group Series remote, press the **Home** button for five seconds.

   The EagleEye Producer LED changes to a fast blue blink.
4. Using the video preview on your monitor, press the **Up** and **Down** arrow buttons on the RealPresence Group Series remote control to align the EagleEye Producer camera with the EagleEye camera.

TIP: Use the video preview on your monitor to show the best room view when group framing.

5. Do one of the following:
   - On the RealPresence Group Series remote, press the **Home** button to exit calibration mode.
   - Don't press any buttons for 5 seconds to automatically exit calibration mode.

Use MJPEG Video Format on EagleEye Cube Cameras

You can select MJPEG as the video format on EagleEye Cube cameras connected to a G7500 system.

1. In the system web interface, go to **Audio/Video** > **Video Inputs**.
2. Go to the EagleEye Cube camera settings.
3. Select **Force MJPEG Format**.
4. Select **Save**.

   The system reboots.

Selecting the Primary Camera

If you have more than one camera attached to the system, you can select the primary camera in or out of a call.

Camera Priority

When you connect or disconnect a camera, camera priority determines the primary or active camera.

The system observes the following camera type priority:

1. Embedded camera (Poly Studio X only)
2. HDCI camera (Poly G7500 only)
3. USB camera
4. HDMI source set to display as people

Maximum Supported Camera Connections in Poly Video Mode

Your systems support a limited number of cameras for use in and out of calls.

For a list or supported and compatible cameras, and the number of supported cameras by provider, see the Poly VideoOS Compatibility Reference Guide.

Configuring video input settings

Customize your video input settings, such as enabling connected cameras, adjusting camera orientation, or specifying whether people or content display on connected monitors.

Your system supports two video inputs settings: **People** and **Content**.

For example, a people source has pan, tilt, zoom, and near/far camera control settings, while a content source doesn't.

Camera settings aren't available to users during a meeting. Poly recommends adjusting these settings as part of setting up and configuring the video system in your environment.

Configure General Video Input Settings

Customize your video input settings to provide the best meeting experience with your cameras.

NOTE: The system only displays settings that apply to your camera. For example, you don't see tracking options if your camera doesn't support tracking.

For a list of supported configurations for Poly cameras, see the camera information in **Video Integration**.

1. In the system web interface, go to **Audio/Video** > **Video Inputs**.
2. Go to the input of a connected camera.
3. Configure the following settings that apply to your camera:

Table 10-6

Setting	Description
Input Format	Specifies the source type of the device. This setting is read-only unless the system doesn't detect the device.
Name	Enter a name for the camera or device.
Model	Displays the type of device connected to the system.
Optimized for	Specifies optimization preferences for the video input. • **Sharpness**: Gives preference to resolution over frames per second. With this setting, moderate-to-heavy motion at low call rates can cause some frames to drop. • **Motion**: Gives preference to frames per second over resolution.
Backlight Compensation	Specifies if the camera automatically adjusts for a bright background. Use backlight compensation when the subject appears darker than the background.
Skin Enhancement	Enables or disables natural skin color enhancements for participants.
Wide Dynamic Range	Enables or disables re-exposure according to the framed area instead of full view.

Table 10-6 (continued)

Setting	Description
Framing Size	Specifies the framing view. • **Wide**: Establishes a wide view of meeting participants. • **Medium**: (Default group framing view) Establishes a medium view of meeting participants. • **Tight**: Establishes a close-up view of meeting participants.
Sharpness	Adjusts the video's overall clarity.
Brightness	Adjusts the video brightness.
Color Saturation	Adjusts the color saturation.
Maximum Digital Zoom Factor	Specifies the maximum digital zoom factor for the camera.

4. Select **Save**.

Configure HDMI Input Settings

Configuring HDMI input as people input enables you to take full advantage of the system's available transmit bandwidth and provides better picture quality for shared content.

1. In the system web interface, go to **Audio/Video** > **Video Inputs**.
2. Configure the following **HDMI Input** settings:

Setting	Description
Display as	Specifies the display type. You can't change this setting if the system is in Device Mode or if the HDMI input is set to **People** and the system is currently using the source as the people camera. • **People**: Sends content as a camera source with the highest levels of transmit bandwidth. This feature isn't available on Studio X30 systems. • **Content**: Sends content as a content source with a lower bandwidth and enables you to use the system's annotation tools.
Name	Enter a custom name for the HDMI input.
Optimized for	Specifies optimization preferences for the video input. • **Sharpness**: Gives preference to resolution over frames per second. With this setting, moderate-to-heavy motion at low call rates can cause some frames to drop. • **Motion**: Gives preference to frames per second over resolution.

Setting	Description
Enable HDMI Auto-Start	By default, the system automatically displays content when a participant connects an HDMI input source to the system. When HDMI Auto-Start is disabled, the participant chooses when to display content by accessing the Content screen and selecting an active content stream.

3. Select **Save**.

Adjust the White Balance

Use white balance to compensate for light source variations in the room.

Poly cameras automatically adjust the white balance when set to **Auto**.

1. In the system web interface, go to **Audio/Video** > **Video Inputs**.
2. Choose one of the following options for the **White Balance** setting (available options depend on the camera you're using):
   - **Auto**: Recommended for most situations. It calculates the best white balance setting based on lighting conditions in the room.
   - **Manual**: Use this setting for rooms where the **Auto** and fixed values don't provide acceptable color reproduction.
     When you set to **Manual**, fill the camera's field of view with a flat white object, such as a piece of paper. For best results, the object should be uniformly illuminated with light that is representative of the room lighting used in the conference, rather than light from a display, another area, or a shadow. After the object is in place, select **Calibrate**.
   - **Color Temperature Value**: The color temperature values, measured in degrees Kelvin, correspond to the color of ambient light in a room. Use lower values for warmer lighting and higher values for cooler lighting.
   - **Color Temperature Term**: Some cameras, including Studio X50 and Studio 30, provide text descriptions of available color temperatures. For example, **Fluorescent** or **Shade** .
   - **Off**
3. Select **Save**.

Adjust Your Studio X Camera Lighting Based on Your Workspace

Your Studio X50 or Studio X30 system has predefined camera options to help with lighting based on the room environment.

For example, use the **Personal Mode** for home offices because it automatically brightens the center of the camera image. This option highlights where you are most likely in the frame while working from home.

NOTE: If you use one of the predefined modes, you can still adjust individual camera settings (such as sharpness and brightness).

1. In the system web interface, go to **Audio/Video** > **Video Inputs**.

2. For your camera input, choose one of the following for the **Workspace Lighting** setting:
   - **Personal Mode**: Select this option to automatically adjust brightness for a home office, cubicle, or similarly sized workspace. The system uses a center frame spot weighted point to configure the automatic exposure.
   - **Conference Mode**: Select this option to automatically adjust brightness for conference room environments. The system uses a larger center weighted spot to configure the automatic exposure.
   - **Off**: (Default) Select this option when you have a room with strong backlight or bright regions. The system uses the full frame to configure the automatic exposure.
3. Select **Save**.

Configure Camera Tracking Settings on Poly Studio G62 and Poly G7500

Poly camera tracking technology can automatically frame groups of people or the active speaker in medium and large rooms.

Tracking options and behavior depend on the camera connected to your system.

1. In the system web interface, go to **Audio/Video** > **Video Inputs**.
2. Go to the camera's settings and specify a **Tracking Mode**.

   Review the camera specifications for supported camera tracking modes.
3. Set **Tracking Enabled** to **On** or **Off**.
4. Select **Save**.

Configure Camera Tracking Settings for Studio X Family Systems

With Studio X Family systems, Poly camera tracking technology can automatically frame groups of people and follow conversations in meeting rooms.

Tracking options and behavior depend on your connected camera. For example, if you use a standalone EagleEye IV camera with your system, you won't see tracking options.

NOTE: If you select a framing option, it automatically enables tracking on the Studio X Family systems.

1. In the system web interface, go to **Audio/Video** > **Video Inputs**.
2. Go to the camera settings and specify a **Tracking Mode**.
   - **Frame Group**: The camera automatically locates and frames all the people in the room.
   - **Frame Speaker**: The camera includes everyone in the current conversation. For example:
     - The camera focuses on people actively talking.
     - When someone is talking for a prolonged period of time, the camera assumes that this person is presenting and only focuses on them.

- If there's a period in which no one has said anything or the far side is doing most of the talking, the camera frames everyone in the room.

NOTE: When you mute your microphone, the camera tracking mode automatically switches to Frame Group.

- **Off**: Disables automatic tracking. You control the camera manually.

3. Set **Tracking Enabled** to **On** or **Off**.
4. Select **Save**.

Select People Framing

Select **People Framing** to track and frame meeting participants in up to six individual frames.

People framing identifies individuals in a conference and presents each person in a single frame. If the system detects more than six people, the camera frames all participants together using group framing.

NOTE: People Framing will not work in 4K resolution on Poly Studio X30 and Poly Studio X50 video bars.

1. In the system web interface, go to **Audio/Video** > **Video Inputs**.
2. From the **Tracking Mode** drop-down menu, select **People Framing**.

Select Frame Presenter on Poly Studio E60

You can configure your Poly Studio E60 camera to track a presenter.

Select **Frame Presenter** to identify and track a presenter such as a person speaking from a podium, the front of a room, or on a stage.

1. In the system web interface, go to **Audio/Video** > **Video Inputs**.
2. In the Poly Studio E60 settings, go to **Tracking Mode** and select **Frame Presenter**.

Configure the Frame Presenter tracking area

You can configure the area the camera sends to the far end when no presenter is present and the area in which to look for a presenter.

Configure the Poly DirectorAI frame presenter parameters based on your environment.

The Poly Studio E60 camera uses the AI lens, beneath the main telephoto lens, for presenter detection and tracking. When you configure presenter framing, the system presents the AI camera view and not the telephoto lens view.

- **Stage Frame**—The 16:9 area presented to the far end when the camera doesn't identify a presenter in the **Presenter Tracking Zone**

  You can resize this area

- **Presenter Tracking Zone**—The area the camera uses to detect a presenter. The **Presenter Tracking Zone** is a subset of the **Stage Frame** and can't be larger than the **Stage Frame**. When a presenter enters the configured presenter tracking zone, the camera tracks the speaker until the speaker leaves the presenter tracking zone.

If multiple people are in the **Presenter Tracking Zone**, the camera frames the presenters using group framing.

1. In the system web interface, go to **Audio/Video** > **Video Inputs**.
2. Select **Configure** next to **Setup Presenter Tracking Zones**.
3. Adjust the **Stage Frame** to set the area you want the camera to send to the far end when the camera doesn't detect a presenter.
4. Adjust the **Presenter Tracking Zone** to set the area you want the camera to use for detecting a speaker.

Poly DirectorAI Perimeter

Define the area used by your video system to track meeting participants when a tracking mode is enabled.

NOTE: In some environments, it's possible that the width defined in the system may not exactly match the area you're defining. When using this feature, Poly recommends testing and adjusting the perimeter settings as necessary.

You can provide feedback on the DirectorAI Perimeter feature by visiting the Poly Lens Feedback Portal.

Your Poly system uses the area visible by the camera to locate and track meeting participants in a conference room. In situations such as a conference room with glass walls, the area visible by the camera may extend beyond the conference room.

Using DirectorAI Perimeter, you can ensure that the camera only tracks participants within the defined conference room area.

If a participant moves out of the perimeter, the camera no longer tracks their movement.

Define the DirectorAI Perimeter

Define the area used by your system to track participants in a conference room.

1. In the system web interface, go to **Audio/Video** > **Video Inputs**.
2. Select **Enable DirectorAI Perimeter**.
3. Using the drop down, choose to use either **Metric** or **Feet** to define the tracking area.
4. Enter a tracking width, tracking depth, and the front exclusion depth.
5. Select **Save**.

Configure DirectorAI Perimeter settings from Poly TC10 or Poly TC8

Configure Poly DirectorAI Perimeter settings from a Poly TC10 or Poly TC8 touch controller connected to a Poly Studio X52, Poly Studio X50, or Poly Studio X30 system.

When you configure DirectorAI Perimeter settings from a Poly touch controller, you can test the settings in real time. When you enable Poly DirectorAI Perimeter on a Poly touch controller, the monitor displays a blue box to indicate if you're inside or outside of the set perimeter. This live tracking feature isn't available when you set the perimeter in the system web interface.

1. On a Poly TC10 or Poly TC8 touch controller, swipe left from the right-side of the screen.

2. Select **Camera Settings**.
3. Select **DirectorAI Perimeter**.
4. Enter the touch controller admin password.

   The DirectorAI configuration screen appears and the monitor displays a blue box that enables you to test your perimeter settings.

   NOTE: The system enters sleep mode if you don't adjust the configuration settings before the sleep timer setting. However, the touch controller remains on the DirectorAI Perimeter configuration screen. Tap the screen to exit sleep mode.

5. Select **Enabled**.
6. On the touch controller, long press one of the arrows on the screen and adjust it to fit your room size.

   - Move the arrows from the left, right, top, or bottom of the configuration area.
   - The screen provides approximate distances from the camera.

   Your settings automatically save as you make adjustments. If you disable DirectorAI Perimeter the settings are retained. To reset the perimeter, select the reset icon on the bottom right of the screen and select **Reset**.

Video Codec Capabilities

Your system supports H.265 High Efficiency Video Coding (HEVC) and H.264 Advanced Video Coding (AVC) codec standards.

H.265 High Efficiency Video Coding

From a video call quality standpoint, H.265 gives you up to 4K at 30 fps for people streams and 4K at 15 fps for content streams.

NOTE: Your system only supports H.265 during point-to-point SIP calls with any of the following Poly video systems: Poly Studio G62, Poly G7500, Poly Studio X72, Poly Studio X70, Poly Studio X52, Poly Studio X50, or Poly Studio X30.

NOTE: Poly Studio G62, Poly G7500, and Poly Studio X series systems only support H.265 during point-to-point SIP calls.

Supported H.265 People Stream Resolutions During Calls

The following tables include the H.265 resolutions and frame rates for people streams observed in SIP calls between two Poly video systems (for example, the Studio X50 or Studio X30's built-in camera).

Resolutions and frame rates are based on the call speed and the **Optimized for** setting of your video input. (For example, **Motion** or **Sharpness**.)

Due to the complexities of system capabilities and the call types and scenarios in your environment, it isn't possible to provide the resolutions and frame rates for calls between a Poly Studio G62, Poly G7500, or Poly Studio X system and a different type of endpoint. The systems attempt to provide the highest resolutions and best frame rates in all types of calls.

The information in the following table is based on a camera source capable of 4K at 30 fps (for example, the Studio X50 or Studio X30's built-in camera).

Table 10-7 Supported H.265 People Stream Resolutions During Calls (4K at 30 fps Camera Source)

Call Speed (kbps)	Motion/Sharpness	Resolution	Max Frame Rate (fps)
1137–1308	Both	2560 × 1440	30
1309–1468	Both	2880 × 1620	30
1469–2110	Both	3200 × 1800	30
≥2111	Both	3840 × 2160	30

The information in the following table is based on a camera source capable of 1080p at 60 fps.

Table 10-8 Supported H.265 People Stream Resolutions During Calls (1080p at 60 fps Camera Source)

Call Speed (kbps)	Motion/Sharpness	Resolution	Max Frame Rate (fps)
370–479	Motion	1024 × 576	60
480–109	Motion	1280 × 720	60
≥110	Motion	1920 × 1080	60
300–600	Sharpness	1280 × 720	30

Table 10-8 Supported H.265 People Stream Resolutions During Calls (1080p at 60 fps Camera Source) (continued)

Call Speed (kbps)	Motion/Sharpness	Resolution	Max Frame Rate (fps)
600–1199	Sharpness	1920 × 1080	30
≥1200	Sharpness	1920 × 1080	60

Supported H.265 Content Stream Resolutions During Calls

The following table includes the H.265 resolutions and frame rates for content streams observed in SIP calls between two Poly video systems (for example, the Studio X50 or Studio X30's built-in camera).

Resolutions and frame rates are based on the call speed and the **Optimized for** setting of your video input. (For example, **Motion** or **Sharpness**.)

Due to the complexities of system capabilities and the call types and scenarios in your environment, it isn't possible to provide the resolutions and frame rates for calls between a Poly Studio G62, Poly G7500, or Poly Studio X system and a different type of endpoint. The systems attempt to provide the highest resolutions and best frame rates in all types of calls.

Table 10-9 Supported H.265 Content Stream Resolutions During Calls

Resolution	Sharpness Max Frame Rate (fps)	Motion Max Frame Rate (fps)
1920 × 1080	30	30
2560 × 1440	30	30
2880 × 1620	15	15
3200 × 1800	15	15
3840 × 2160	15	15

H.264 Advanced Video Coding

Your system supports H.264 during H.323 and SIP calls.

Supported H.264 People Stream Resolutions During Calls

The following table includes the H.264 resolutions and frame rates for people streams observed in H.323 calls between two Poly video systems (for example, the Studio X50 or Studio X30's built-in camera).

Resolutions and frame rates are based on the call speed and the **Optimized for** setting of your video input. (For example, **Motion** or **Sharpness**.)

Due to the complexities of system capabilities and the call types and scenarios in your environment, it isn't possible to provide the resolutions and frame rates for calls between a Poly Studio G62, Poly G7500, or Poly Studio X system and a different type of endpoint. The systems attempt to provide the highest resolutions and best frame rates in all types of calls.

The information in the following table is based on a camera source capable of 1080p at 60 fps.

Table 10-10 Supported H.264 People Stream Resolutions During Calls

Call Speed (kbps)	Motion/Sharpness	Resolution	Max Frame Rate (fps)
<160	Motion	512 × 288	60
160–511	Motion	640 × 368	60
512–831	Motion	848 × 480	60
832–895	Motion	720 × 832	60
896–1727	Motion	1280 × 720	60
≥1728	Motion	1920 × 1080	60
<128	Sharpness	640 × 368	30
128–511	Sharpness	1024 × 576	30
512–1023	Sharpness	1280 × 720	30
≥1024	Sharpness	1920 × 1080	30

Supported H.264 Content Stream Resolutions During Calls

The following table includes the H.264 resolutions and frame rates for content streams observed in H.323 calls between two Poly video systems (for example, the Studio X50 or Studio X30's built-in camera).

Resolutions and frame rates are based on the call speed and the **Optimized for** setting of your video input. (For example, **Motion** or **Sharpness**.)

Due to the complexities of system capabilities and the call types and scenarios in your environment, it isn't possible to provide the resolutions and frame rates for calls between a Poly Studio G62, Poly G7500, or Poly Studio X system and a different type of endpoint. The systems attempt to provide the highest resolutions and best frame rates in all types of calls.

Table 10-11 Supported H.264 Content Stream Resolutions During Calls

Resolution	Sharpness Max Frame Rate (fps)	Motion Max Frame Rate (fps)
800 × 600	30	60
1024 × 768	30	60
1280 × 720	30	60
1280 × 1024	30	60
1920 × 1080	30	60

11 Setting Up a Directory

You can register your system with a directory to call contacts in your organization

The system supports the following directory features:

- Up to 2,000 local contacts
- Up to 2,000 Favorites
- Up to 200 Favorites groups
- Global groups (local groups aren't supported)
- Up to 4,000 contacts from a Polycom GDS server

Register with the Polycom Global Directory Server

You can register your system with the Polycom Global Directory Server (GDS).

Enable H.323 on your system before you register it with this directory server.

1. In the system web interface, go to **Servers** > **Directory Servers**.
2. In the **Server Type** field, select **Polycom GDS**.
3. Configure the following settings:

Setting	Description
Server Address	Specifies the IP or DNS address of the Polycom GDS.
Password	The Polycom GDS password, if one exists.

4. Select **Save**.

Register with an LDAP Directory Server

You can register your system with an LDAP directory server.

1. In the system web interface, go to **Servers** > **Directory Servers**.
2. In the **Server Type** field, select **LDAP**.

3. Configure the following settings:

Setting	Description
Server Address	Specifies the address of the LDAP directory server. When provisioned, this setting is read-only.
Server Port	Specifies the port for connecting with the LDAP server. When provisioned, this setting is read-only.
Base DN (Distinguished Name)	Specifies the top level of the LDAP directory where searches begin. When provisioned, this setting is read-only. To avoid LDAP registration issues, make sure the base DN is at least one level deeper than your domain. For example, enter `ou=users,dc=example,dc=com` instead of `dc=example,dc=com`.
Multitiered Directory Default Group DN	Specifies the top-level group of the LDAP directory required to access its hierarchical structure. When provisioned, this setting is read-only.
Authentication Type	Specifies the protocol for authenticating with the LDAP server: • **NTLM** • **Basic** • **Anonymous**
Bind DN (Distinguished Name)	Specifies the bind DN when using basic authentication. Available only when you set **Authentication Type** to **Basic**. When provisioned, this setting is read-only.
Use SSL (Secure Socket Layer)	When enabled, encrypts data to and from the LDAP server.
Domain Name	Specifies the domain name for registering with the LDAP server.
User Name	Specifies the user name for registering with LDAP server.
Password	Specifies the password for registering with the LDAP server.

4. Select **Save**.

Managing Contacts and Favorites

You can create local contacts and designate favorites for your system.

Types of

The CCX system web interface displays several types of favorites.

Directory Server Registration	Types of Contacts
	• Directory entries created locally by the user. • References to Polycom GDS entries added to **Favorites** by the user. These entries are available only if you successfully register the system with Polycom GDS. Users can delete these entries from **Favorites**, but they can't edit these entries. Users can copy these entries to other **Favorites** and remove them from those groups.
LDAP with H.350	• Directory entries created locally by the user. • References to LDAP directory entries added to **Favorites** by the user. These entries are available only if the system can successfully access the LDAP server. Users can delete these entries from **Favorites**, but they can't edit these entries. Users can copy these entries to other **Favorites** and remove them from those groups.

Manage Contacts

You can add contacts individually or in bulk in the system web interface.

1. Do one of the following:
   - Go to **Dashboard** > **Contacts**.
   - Go to **Place a Call** > **Contacts**.
2. Select **More** ⋮ and choose one of the following options:
   - **New Contact**: Create a single contact.
   - **Import**: Upload contacts in bulk using an XML file (can't exceed 3 MB).
   - **Export**: Download local contacts to an XML file (doesn't include contacts available through a directory server).

Unfavorite a contact

Unfavorite a contact to remove the contact from your **Favorites** list.

1. Go to **Place a Call** > **Favorites**.

2. Choose a favorite card, then select **Unfavorite**.

   The contact is removed from the **Favorites** list.

12 Calendaring Service

Your system can connect to Microsoft Exchange Server 2013 to retrieve calendar information for a specific Microsoft Outlook or a Microsoft Office 365 individual or system account.

The system connects to Microsoft Exchange Server using the credentials you provide or by automatically discovering the connection information based on an email address or SIP server address.

Connection to a calendaring service allows the system to:

- Display the day's scheduled meetings, along with details about each
- Display a **Join** button on all scheduled meetings for the current day
- Let users join the meeting without knowing the connection details
- Hide or show details about meetings marked Private, depending on the configuration of the system
- Display a meeting reminder before each scheduled meeting, along with a reminder tone

Configure a Calendaring Service

You must configure your system to use a calendaring service so users can see scheduled meetings on the local interface.

1. In the system web interface, go to **Servers** > **Calendaring Service**.
2. Select the **Enable Calendaring Service** check box.
3. Configure the following settings:

Setting	Description
Email	Specifies the email address used when scheduling the system for a meeting (for instance, you can use your system as a mechanism to reserve a meeting space). This email address must match the Primary SMTP Address for the account on Microsoft Exchange Server, which displays as the value of the mail attribute in the account properties.

Setting	Description
Domain	Specifies the domain to register to the Microsoft Exchange Server in NETBIOS or DNS notation (for example, `company.local` or `COMPANY`). If you are using the **Auto Discover Using** setting in the system web interface, don't provide a value here.
User Name	Specifies the user name to register to the Microsoft Exchange Server. This can be the name of the system or an individual (for example, `username@company.com`). If you want to use the calendar associated with an Office 365 account, enter the user name for that account here.
Password	Specifies the system password to register to the Microsoft Exchange Server. This can be the system's or an individual's password. If you want to use the calendar associated with an Office 365 account, enter the password for that account here.
Auto Discover Using	Specifies how the system obtains the Microsoft Exchange Server address. If you select **Email Address**, the system uses the value provided in the **Email** field. If you select **SIP Server**, the system uses the registered SIP server domain name configured for the system. With either option, you must complete the **Email**, **User Name**, and **Password** fields that correspond to the account you want the system to use for the calendaring service. The system may prompt you to confirm the password. NOTE: This feature is unavailable if the Microsoft Exchange Server address is provisioned. If after configuring the calendaring service a message displays that the system is unable to discover the service, verify that the information you provided is correct. You can also use an API command to automatically discover the Microsoft Exchange Server address. For more information, go to the Poly Online Support Center.
Microsoft Exchange Server	Specifies the FQDN of the Microsoft Exchange Client Access server. If your organization has multiple servers behind a network load balancer, this is the FQDN of the server's virtual IP address. If required, you can use an IP address instead of an FQDN, but it's recommended you use the same FQDN for Outlook clients. Provide a value here only if you want to manually provide connection information to the Microsoft Exchange Server. Otherwise, use the **Auto Discover Using** setting to automatically populate this field.
Meeting Reminder Time in Minutes	Specifies the number of minutes before the meeting that a reminder displays on the system.
Play Reminder Tone When Not in a Call	Specifies whether to play a sound along with the text reminder (when the system is not in a call).
Show Information for Meetings Set to Private	Specifies whether to display details about meetings marked private.

4. Select **Save**.

After you register your system to the calendaring service, users can join scheduled meetings from the **Home** and **Calendar** screens on the local interface.

13 Sharing Content

Your system provides several ways to share and annotate content.

Default Options for Sharing Content

Once your system is running and configured for your environment, users can share content from their personal devices with no additional setup using the following methods.

- **Wireless screen mirroring**:
  - A Miracast-certified device screen is mirrored onto the system display.
  - An AirPlay-certified device screen and any accompanying audio is mirrored onto the system display.

  You can disable these options in the system web interface.
- **Wired input**: A laptop or desktop connected to the system through HDMI.

For more information on Miracast, see the *Miracast Performance Technical Reference* on the Poly Online Support Center.

The system allows up to four simultaneous content sources out of a call and three in a call (a source can include content shared from a device in the room or by a far-end participant).

For example, if you're in a call with three content sources and you share your desktop using Miracast, the oldest wireless or far-end content source in the session is replaced by your content. HDMI content, however, is never replaced.

Disable Screen Mirroring Options

You can disable content sharing with Miracast- or AirPlay-certified devices (screen mirroring) without turning off wireless connectivity or Bluetooth on your system. Screen mirroring options are enabled by default.

1. In the system web interface, go to **Security** > **Wireless Security**.
2. Do one of the following:
   - Clear the **Enable AirPlay** check box to disable screen mirroring with AirPlay-certified devices.
   - Clear the **Enable Miracast** check box to disable screen mirroring with Miracast-certified devices.

14 Customizing the Local Interface

You can configure some of the Poly G7500, Poly Studio G62, and Poly Studio X series system local interface settings according to your preferences.

Change the Home Screen Background Image

In Poly Video mode and Poly Device Mode, you can upload a custom background image to display on your system display and paired Poly TC10 or Poly TC8 touch controller.

The image must have a 16:9 resolution between 1280 × 720 and 3840 × 2160 (1920 × 1080, 2560 × 1440, or 3840 × 2160 is recommended). The system supports `.jpg` and `.png` formats with a file size of less than 10 MB.

NOTE: This option is unavailable if your image is provisioned to the system.

1. In the system web interface, go to **General Settings** > **Home Screen**.
2. Select **Choose File**, navigate to the image file, then select **Upload**.

The custom image displays.

Adding a custom home screen to Poly TC10 or Poly TC8

In Poly Video mode or Device Mode, when you add a custom home screen to your system, it displays on the system monitors and any paired Poly touch controllers.

Restore the Default Background Image

You can switch back to the default background image to display on your system.

1. In the system web interface, go to **General Settings** > **Home Screen**.
2. Select **Use Default Background**.

Hide the Self-View Picture-in-Picture Display on the System Monitor

You can remove the self-view Picture-in-Picture (PIP) shown on system monitor outside of a call.

1. In the system web interface, go to **General Settings** > **Home Screen**.

2. Under **Home Screen Elements**, check the **Hide Self View PIP** check box.
   - The self-view PIP disappears from the system monitor.
   - On touchscreen displays, the PIP disappears after 10 seconds of inactivity.

Hide the Task Buttons on the System Monitor

You can hide the task buttons that display on the system monitor.

1. In the system web interface, go to **General Settings** > **Homescreen**.
2. Under **Home Screen Elements**, check the **Hide Home Screen Icons** check box.
   - The icons disappear from the system monitor.
   - On touchscreen displays, the icons disappear after 10 seconds of inactivity.

Customize the Address Bar

You can customize what displays in the address bar of the system's local interface *Home* screen.

The address bar is under the room name. You can list two of the following details:

- Primary IP Address
- Guest Wi-Fi IP Address
- H.323 Extension
- SIP Address
- None

1. In the system web interface, go to **General Settings** > **Home Screen**.
2. Choose options for **Primary Element** and **Secondary Element** (your changes save automatically).

Display Meetings or Favorites on the Home Screen

You can display meeting information or favorite contacts on the home screen of the system local interface.

1. In the system web interface, go to **General Settings** > **Home Screen**.
2. Select one of the following options in the **Home Screen Widget** field:

Setting	Description
None	Hides the home screen widget.
Calendar	Displays meeting information on the home screen.
Favorites	Displays favorites on the home screen.

Configure Dual Monitor Display Settings

You can choose your self view and content display preferences when you connect two monitors to your system.

Even if your system has only one monitor, you can still configure second monitor settings. These settings take effect once you connect a second monitor.
The Studio X30 system supports only one monitor.

1. In the system web interface, go to **Audio/Video** > **Monitors**.
2. Configure the following settings (your changes save automatically):

Setting	Description
Self View Size	Specifies how the self view window displays when others join a call. • **Corner**: Displays the self view in the corner of Monitor 2. • **Full Screen**: Displays the self view on the entire screen of Monitor 2.
Content Display	Specifies whether to display content on one or two monitors. • **Single**: Display content on Monitor 2 and people on Monitor 1. • **Dual**: Display people and content on Monitor 1 and content only on Monitor 2.

Digital Signage

Poly Studio G62, Poly G7500, and Poly Studio X family devices support configuring the systems to display digital signage when the system is idle during office hours.

Using Appspace, Raydiant, or another digital signage provider, you can display alert messages, quick tips, videos, or company messaging on the front of room monitor when the system is idle. You must have an account with a digital signage provider to configure digital signage on Poly video systems. In Poly Partner Mode, some providers don't support digital signage.

NOTE: RingCentral doesn't support digital signage.

- Appspace
- Raydiant

Configure Digital Signage

Configure digital signage to display when the video system is idle during office hours.

You must have an account with a digital signage provider to use this feature. The digital signage platform provides the tools necessary to configure the digital signage you want to display on the system. Use the digital signage provider's tools to choose and configure the digital signage the system displays.
Configure out-of-office hours so the system shows digital signage only during office hours. See Configure Out of Office Settings.

1. In the system web interface, go to **General Settings** > **System Settings**.
2. Under **Digital Signage**, select the check box for **Enable Digital Signage**.
3. Configure the following settings:

Setting	Description
Start After	Select how long the system can be idle before digital signage begins.
Provider	Choose **Custom** or one of the listed digital signage servers.
Signage URL	If you select **Custom**, enter the URL of the digital signage provider.
Account Location	For Appspace, and Raydiant accounts only. Select whether the account is **Private** or **Public**. If you set the Appspace location to **Private**, you'll need to enter the URL of your private Appspace server.

4. Select **Save**.
5. Select **Test** to test the signage URL.

15 Configuring System Applications

You can configure external applications to work with your system and provide users with more control when using system features.

Extron Environment Controls

You can configure Extron Control for Poly TC8 or TC10 devices and enable users to control smart devices configured to work with Extron devices, such as lighting, window shades, and displays.

You must have an Extron IPCP Pro control processor and a license for the Extron Control App to use this feature. See the http://www.extron.com/poly website for more information on purchasing and configuring Extron products and using Extron Control for Poly TC8.

Enable Environment Controls

In the system web interface, enable the TC8 or TC10 to show the **Environment** menu option and enable users to control smart devices using the Extron Room Control application.

Configure room elements, such as lights, electronic shades, monitors, and displays, in the Extron control processor.

1. In the system web interface, go to **General Settings** > **System Settings**.
2. Under **Environment**, select the check box for **Enable Environment Controls**.
3. Select **Save**.

Set Up to the Extron Control App on the Poly TC8 or Poly TC10 Device

After you enable the Environment Controls menu option in the system web interface, set up the Extron room controller on the TC8 or TC10 device.

1. On the TC8 device, select **Environment** .

   When you access **Environment** for the first time, the **Room Manager** menu displays.
2. Select **Add Room** .
3. Enter the IP address or host name of the Extron control processor, then select **Next**.
4. Enter the username and password of the control processor, then select **Next**.
5. Enter a unique room name.
6. If you have more than one user interface configured on the control processor, select a user interface to display on the TC8 or TC10 device.
7. Select **Submit**.

After you set up the Extron Controller app on the TC8 or TC10 device, users can access the application to control electronic shades, monitors, projectors, and any smart lighting configured with the Extron control processor.

NOTE: When you enable to always show the status bar in the Extron Room Control settings, the TC8 or TC10 device screen flickers frequently. Hide the status bar to prevent the screen from flickering.

A/V controls integration on Poly TC10 and Poly TC8

Access third-party A/V hardware interfaces from your Poly TC10 or Poly TC8 touch controllers.

You can manage lights, temperature, blinds, and video inputs such as switching from cable TV to Poly devices. See Enable A/V controls on Poly TC10 or Poly TC8.

For more information, see the *Poly A/V Integrators Guide* on https://www.docs.poly.com.

Support for Poly Connect Call Control by Pexip

This release introduced the Poly Connect Call Control feature to integrate your Poly device in Poly Video mode with a Pexip Infinity call interface on SIP calls.

NOTE: Pexip application switching is enabled in Poly Video mode by default.

Note the following information:

- Your system must be running Poly VideoOS 4.4.0 or later.
- Pexip Infinity must be version 34 or later.
- Your Poly touch controller must be able to reach Pexip Infinity via HTTPS port 443.
- Your Poly device must trust any certificate issued from Pexip Infinity unless it's a public certificate.

  Upload the Root CA Server Certificate to your Poly device. Poly devices and touch controllers sync certificates.

Configure system settings for Poly meeting control app

Configure settings within Poly Lens for the Poly meeting control app.

- In the system web interface, go to **General Settings** > **System Settings** > **Poly Connect**.

  Configure the following settings:

  Table 15-1 System settings for Poly Call Control in Poly Video mode

Setting	Description
Enable Poly Connect Call Experience	Enable or disable the Pexip Infinity switching. Default is enabled.
Auto Launch App	Enable or disable auto launching the application. Default is enabled.
Update Server Address	Add a custom URL for updating the Pexip app. The default setting uses the Poly Lens update server.
Automatically Check for Updates Between Specified Hours	Choose when the system checks for Pexip app updates.
Monitor Display	When set to **Auto** (default), the system uses both monitors if you have two monitors connected. When set to **Off**, the system uses only the primary monitor.

16 Controlling the System Remotely

You can control the system remotely using the system web interface to verify camera functionality, system occupancy, or troubleshoot issues.

Capture a diagnostic video from a Poly Studio E70 connected as an IP LLN camera

You can now capture a diagnostic video from an IP LLN connected Poly Studio E70 camera connected to a Poly Studio G62 or Poly G7500.

For more information on capturing a diagnostic video clip, see https://docs.poly.com/bundle/polyvideomode-ag-current/page/remotely-capture-a-video-clip.html.

Remotely Capture a Diagnostic Video Clip

Use the system web interface to capture a 100-second clip of the room video and people tracking information from the built-in camera. The system sends the video clip and people tracking information to Poly support.

To enable diagnostic video capture on your system, you'll need to:

- Register and connect the system to Poly Lens
- Enable camera tracking

NOTE: To avoid interrupting a diagnostic video capture:

- Don't start or end a call while the diagnostic video capture is in progress
- Don't turn off camera tracking while the diagnostic video capture is in progress

You can remotely capture a video on the following systems:

- Poly Studio X systems
- Poly Studio G62 or Poly G7500 with a USB or IP connected Poly Studio E70 camera

1. In the system web interface, go to **Diagnostics** > **Video Capture**.
2. Select **Start Video Capture**.

   The system alerts the conference room participants and asks for approval to begin the video capture. Once the room participants approve by select **Yes**, the video capture begins.

In the system web interface, the system reports that the video capture is in progress.

Once complete, the system web interface reports that the video capture is complete and sent to the Poly support team.

Wake the System Remotely

You can wake the system from the system web interface.

1. In the system web interface, go to **Diagnostics** > **Remote Monitoring**.
2. Go to **System Wake** and select **Wake the System**.

Place a Call from the System Web Interface

The system web interface gives you many of the same calling features and controls that are in the local interface.

You can also place video and audio-only calls directly from the **Dashboard**.

NOTE: You can't make calls from the system web interface when Poly Device Mode is enabled.

1. In the system web interface, go to **Place a Call**.
2. Do one of the following:
   - Select **Dial** to manually dial a number or name.
   - Select **Contacts** to search local and directory contacts to call.
   - Select **Favorites** to search contacts marked as Favorites.
   - Select **Recent** to select a number or name you've called in the past.

17 System Maintenance

You can perform several functions to keep your Poly G7500, Poly Studio G62, and Poly Studio X series system running properly.

Locate the System Serial Number

Use the system serial number to help technical support troubleshoot issues with your system.

The last 6-digits of the system serial number is the default system password.

- Do one of the following:
  - In the system web interface, go to **Dashboard** > **System Detail**.
  - On a paired Poly TC8 or Poly TC10 device, go to **Menu** > **Settings** > **Connected Room System**.
  - Locate the printed serial number on the bottom or rear of your system.
  - In Poly Lens, go to **Details** > **Device Information**.

Locate the system IP address using a paired Poly touch controller

You can view the system IP address on a paired Poly TC10 or Poly TC8 touch controller.

1. On the Poly TC10 or Poly TC8 user interface, swipe left from the right side of the screen.
2. Select **Settings**.

   System information, including the system IP address, displays.

Locate the system IP address using the system monitor and a USB mouse

If you don't have a touch monitor, remote control, Poly TC8 or Poly TC10 touch controller paired to your system, you can use a USB mouse to identify the system IP address.

1. Connect a USB mouse to an available USB-A port on the back of the system.

   A cursor appears.

2. Move the mouse to the right side of the screen.
3. Press the left mouse button and swipe left to reveal the Poly menu.

   The IP address displays at the top of the menu.

Unlock System Settings

Some settings in the local interface are locked by default. You can unlock these settings with your system's local administrator credentials.

1. Do one of the following:
   - In a call, select **Menu** > **More** ••• > **Settings** .
   - Out of a call, select **Menu** > **Settings** .
2. Select a setting with a **Lock** .
3. Enter your local administrator credentials to unlock the setting.

NOTE: Settings lock again if you exit the **Settings** screen, restart the system, or power off the system.

Updating Software

You can update your Poly G7500, Poly Studio G62, and Poly Studio X series system software a few different ways.

Use one of the following methods to update system software:

- Poly download server
- Custom server URL
- Software package you obtain from the Poly Lens Software Versions page and upload with a USB flash drive
- Provisioning service (for example, Poly Lens or Poly Clariti Manager)

Updating Paired Devices

When you update your system, you also update some of its paired devices (if those devices have a new version available). Depending on your setup, these devices might include:

NOTE: Poly recommends updating all connected peripherals to the versions included in the VideoOS software version installed on the video system.

- Poly IP Table Microphone
- Poly IP Ceiling Microphone
- Poly Microphone IP Adapter
- Poly TC10 device
- Poly TC8 device
- Poly EagleEye Cube USB camera
- Poly Studio E70 camera
- Poly Trio 8500, Trio 8800, or Trio C60 system

Updating a Paired Poly TC8 or Poly TC10

To update a Poly TC8 or Poly TC10, pair it with a G7500 or Studio X series system and ensure it has access to the Poly update server.

When the system checks for new software, it also checks for peripheral software updates. If a TC8 or TC10 update is available, the TC8 downloads the software directly from the Poly update server and updates to the available software version.

Updating a Paired Poly Trio

You can update a Poly Trio system that's paired with your video system in various ways.

See the Poly Trio administrator documentation for information on updating the phone using the following methods.

Automatic Updates

Provision your phone with Poly UC Software. This method works when the phone is paired with the video system.

Manual Updates

Upgrade the phone with a USB flash drive. You must first set the phone to **Hub** mode before you can update.

NOTE: Unlike some other peripherals, you can't update a paired Poly Trio from the **Device Management** page in the system web interface.

Updating the system software

You have multiple options for updating the system software.

NOTE: Software updates through the Poly update server are only available to supported systems.

For information on hardware that supports each Poly VideoOS version and the included peripheral software versions, review the *Poly VideoOS Release Notes* on the Poly Documentation Library.

Updating your Poly G7500, Poly Studio G62, and Poly Studio X series system

You have several options to update your system software, depending on your environment.

NOTE: If you provision your system, the software update methods in the system web interface are unavailable. Configure the software update method using your chosen provisioning method.

1. In the system web interface, go to **General Settings** > **Device Management**.
2. Select one of the following options in the **Download Update From** field:

Software Update Method	Description
Poly Online Support Center	A software server hosted by Poly. By default, your system is set to use the Poly update server for software updates. You can enable automatic updates or manually update your system using the system web interface. To use the Poly update server, make sure that your system can access `swupdate.lens.poly.com`. This URL is for system software access only. You can't access this server from a web browser.

Software Update Method	Description
Custom Server URL	Manually downloaded software from https://lens.poly.com/manage/software-versions. To ensure that the system recognizes the files and updates your system, retain the folder structure of the software downloaded from Poly Lens. A server on your network that supports HTTP or HTTPS downloads. The URL is the path to the latest software build folder (for example, `https://<system_build_folder>`). It includes update packages for some of your connected devices (for example, a Poly TC10 device) and the video system. NOTE: If you are using private PKI certificates in your environment and want HTTPS software downloads to work, you must install the trusted root certificate from your internal certificate authority (CA) on the system since certificate validation is always performed.
Microsoft Teams Device Management	For systems using the Microsoft Teams Rooms application. Selecting this disables other update controls on the page.
Provisioning Server	Receive updates from a provisioning service, such as Poly Clariti Manager.

3. If you download software from a **Custom Server URL**, enter the path to the software build folder on your network in the **Update Server Address** field.

Once you select from where to download software updates, you can manually or automatically update the system.

Manually Update Software

Manually update the software for your system and some of its paired devices.

1. In the system web interface, go to **General Settings** > **Device Management**.
2. Select **Check for Updates**.
3. If the system finds updates, select **Update All**.

Automatically Update Software

Automatically update the software for your system and some of its paired devices.

NOTE: If your system is onboarded through Poly Lens Room, the system will automatically update overnight when new software is available. On Microsoft Teams Rooms on Windows and Zoom Rooms on Windows systems, it's recommended to allow the system to update automatically as part of overall conferencing PC scheduled updates.

If your system is onboarded to Poly Lens Cloud, you can configure updates in Poly Lens.

1. In the system web interface, go to **General Settings** > **Device Management**.
2. Select **Enable Automatic Updates**.

   Unless you specify a maintenance window, your system tries to update 1 minute after you enable this setting. If an update isn't available at the time, the system tries again every 4 hours.

3. **Optional:** Select **Only Check for Updates During Maintenance Hours** to specify a range of time to automatically update the software.

4. **Optional:** Choose times for **Maintenance Hours Begin** and **Maintenance Hours End**.

   The system calculates a random time within the defined maintenance window to check for updates.

NOTE: If these settings are provisioned, the provisioning profile defines the polling interval. The default interval is 1 hour.

Update your system using a USB flash drive

Update the software for your system and some of its paired devices using a USB flash drive.

If the system is asleep, wake the system by tapping the touch controller, touch screen, or using a connected remote control.

1. Log in to http://lens.poly.com and go to **Manage** > **Software Versions**.

   If you don't have a Lens Cloud account, you can sign up for an account.

2. In the **Search Device Model / Lens App** drop down, type in the name of the device or search.

3. Select your device from the list.

   The latest software version displays.

4. Select the software version you want to download and then select **Download**.

5. Extract the files to a folder on your computer and move the content to the root directory of a FAT32 formatted USB flash drive.

   The root directory of your USB flash drive should contain the file titled "softwareupdate.cfg" along with the individual folders for each product. The extracted files provide the required structure for the system to recognize the update package.

6. Connect the USB flash drive to a USB port on the back of the system.

   When the system detects the USB flash drive, a prompt displays on the monitor to confirm that you want to update the software. If there’s no input to the system, it automatically starts the update after a short delay.

Update the Poly Bluetooth Remote Control Firmware

A system update may include new firmware for your Poly Bluetooth Remote Control.

You must be actively using the remote control for an available update to take effect. After 30 seconds of inactivity, the remote control disconnects from the system until you pick it up or press a button.

1. Update your system software.

2. Pick up the remote control or press a button.

The remote control automatically updates if it detects a new firmware version.

Update Poly HDCI Cameras

You can automatically update an HDCI-connected Poly camera, but not in the same way you update the Poly G7500 system and other connected devices (such as IP microphones).

HDCI cameras only apply to the G7500 system.

1. In the system web interface, go to **Audio/Video** > **Video Inputs**.
2. Select **Enable Camera Update**.

If the system detects a newer software version than what the camera is currently running, the camera updates automatically when the system isn't in a call. However, if during a call you connect a camera that isn't running the latest software, the call ends and the camera software update starts.

Downgrading Software

Manually downgrade software using a USB flash drive or the system web interface if your system doesn't use a provisioning server.

Make sure the system supports the selected provider in the version you're downgrading to.

IMPORTANT: Before downgrading software on your G7500 or Studio X system, see the Poly VideoOS release notes to ensure your system supports the Poly VideoOS version you're downgrading to. Downgrading from VideoOS 4.x to VideoOS 3.x versions isn't supported.

Manually Downgrade Software in the System Web Interface

You can downgrade your Poly G7500, Poly Studio G62, and Poly Studio X series system software and the software of some of its paired devices from a custom download server.

Before you downgrade, Poly recommends doing the following:

- Check the software version you're running. You can find the software version on the system web interface *Dashboard*.
- Make sure automatic updates are disabled on **General Settings** > **Device Management**.

1. Go to **General Settings** > **Device Management**.
2. Manually downgrade your software to an older version located on your download server.

Downgrade Software with a USB Flash Drive

You can downgrade your Poly G7500, Poly Studio G62, and Poly Studio X series system software and some of its paired devices using a USB flash drive.

Before you downgrade, Poly recommends doing the following:

- Check the software version you're running. You can find the software version on the system web interface *Dashboard*.
- Make sure automatic updates are disabled on **General Settings** > **Device Management**.

1. Download an older software version to a USB flash drive.
2. Connect the USB flash drive to your system.

Restart the System

If you encounter issues, you can try restarting your G7500 or Studio X system.

- In the system web interface, go to **Diagnostics** > **System Reset** and select **Restart**.

Scheduled Auto Restart

You can configure your system to automatically restart on a weekly or daily interval.

When **Scheduled Auto Restart** is enabled, the system and paired touch controllers restart at the designated time.

Configure Scheduled Auto Restart

Configure a weekly or daily system auto restart.

1. In the system web interface, go to **General Settings** > **System Settings**.
2. Enable **Enable Scheduled Auto Restart**.
3. Select **Daily** or **Weekly**.

   For **Weekly**, choose a day of the week.
4. Select the time each day or week that the system auto restarts.
5. Select **Save**.

Reset System Settings

You can reset your Poly G7500, Poly Studio G62, and Poly Studio X series system to its default configuration settings.

You may need to perform a system reset for a variety of reasons, for example, when moving a device to a new location.

Resetting your system deletes all but the following data:

- Current software version
- User-installed PKI certificates
- Local directory entries
- Logs
- Call detail record (CDR)

You also can choose not to retain some of this data after the system resets.

NOTE: A system reset restores your system to its original mode of operation. For example, Poly Video Mode or Poly Partner Mode.

1. In the system web interface, go to **Diagnostics** > **System Reset**.
2. Select **Reset All System Configurations**.
3. **Optional:** Clear any of the following check boxes for data you want to delete as part of the reset:
   - **Keep installed certificates.**
   - **Keep the directory entries.**
   - **Keep the system logs.**

- **Keep the system call detail reports.**

4. Select **Reset**.

Factory Restore the System

A factory restore completely erases the system's flash memory and restores it to a stable software version. See the *Poly VideoOS Release Notes*, Version History section, for the current factory restore version.

The system doesn't save the following data with a factory restore:

- Current software version
- Logs
- User-installed PKI certificates
- Local directory entries
- Call detail record (CDR)

1. Disconnect the power supply to turn off the system.
2. Do one of the following:
   - On the back of the Poly Studio G62, insert a straightened paper clip through the factory restore pinhole.

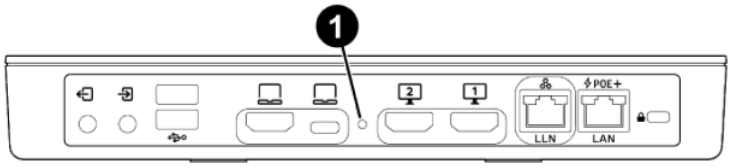

   - On the front of the Poly G7500, insert a straightened paper clip through the factory restore pinhole.

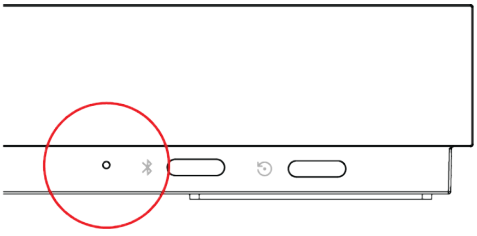

   - On the bottom of the Poly Studio X72 or Poly Studio X70, insert a straightened paper clip through the factory restore pinhole.

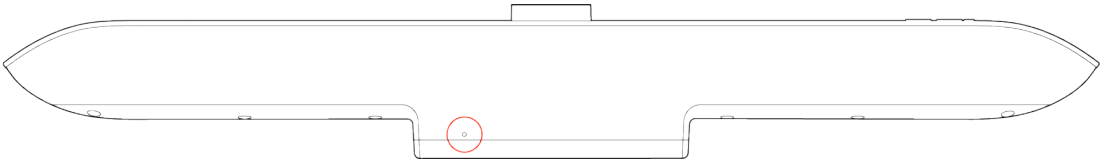

- On the side of the Poly Studio X52, insert a straightened paper clip through the factory restore pinhole.

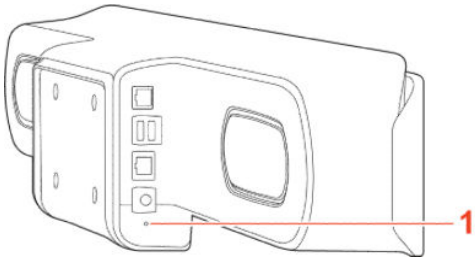

- On the side of the Poly Studio X50, insert a straightened paper clip through the factory restore pinhole.

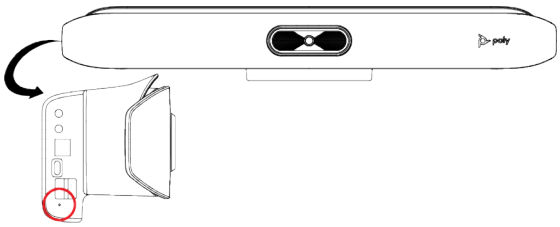

- On the bottom of the Poly Studio X30, insert a straightened paper clip through the factory restore pinhole.

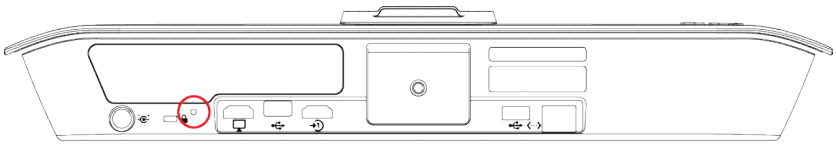

3. While continuing to hold the restore button, reconnect the power supply to turn the system on.
4. When the system LED indicator light turns amber, stop pressing the restore button.

   You can only view the restore progress on a display connected to the secondary monitor HDMI output port.

NOTE: You can't view the restore progress for a Poly Studio X30 system because it doesn't support a secondary monitor connection.

Factory Restore the Poly Studio X52

A factory restore completely erases the system's flash memory and restores it to a stable software version. See the *Poly VideoOS Release Notes*, Version History section, for the current factory restore version.

The system doesn't save the following data with a factory restore:

- Current software version
- Logs
- User-installed PKI certificates
- Local directory entries
- Call detail record (CDR)

1. Disconnect the power supply to turn off the system.
2. On the side of the system, insert a straightened paper clip through the factory restore pinhole.

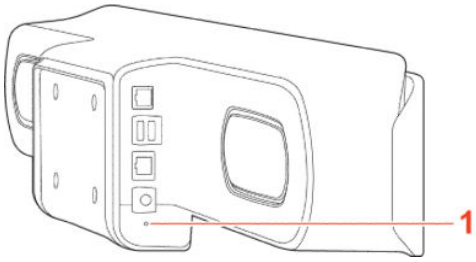

3. While pressing the factory restore pinhole button, connect the power adapter to power on the system.
4. Continue pressing the factory pinhole reset button until the Poly Studio X52 LED flashes.

Factory Restore the Poly Studio E70 Camera

A factory restore completely resets the camera to default settings and restores it to the factory firmware version.

1. Power off the Poly Studio E70 by disconnecting the power source.
2. On the bottom of the camera, insert a straightened paper clip through the factory restore button pinhole.

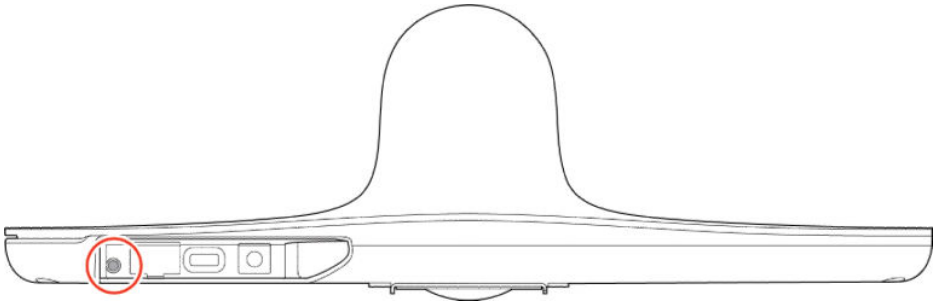

3. While continuing to hold the restore button, reconnect the power supply to turn the system on.
4. When the system LED indicator light turns amber, stop pressing the restore button.

The factory restore is complete when the LED indicator glows solid white.

Factory Restore the Poly Studio E60 Camera

A factory restore completely resets the camera to default settings and restores it to the factory firmware version.

You can only factory restore your Poly Studio E60 camera via the camera's own system web interface.

1. Select **Diagnostics** and **Device Reset**.
2. Select **Reset All Device Configurations**.

Factory Restore a Table Microphone

You can restore a microphone to its default settings. This process refreshes the device by deleting its configurations except the current version of software.

This procedure works for a Poly Studio Table Microphone or RealPresence Debut Expansion Microphone.

1. Ensure that the microphone is powered on.
2. On the back of the table microphone insert a straightened paper clip through the factory restore pinhole.
3. Press and hold the restore button for 5 seconds, then release it when the microphone LED blinks amber.

NOTE: Don’t power off the microphone during this process. It restarts when complete.

Factory Restore a Ceiling Microphone

You can restore a microphone to its default settings. This process refreshes the device by deleting its configurations except the current version of software.

Factory restoring the ceiling microphone requires the following tools:

- A small, thin block N45 magnet (for example, 76.2 mm [3 in.] × 12.7 mm [1/2 in.] × 3.18 mm [1/8 in.])
- Yardstick or adjustable floor-to-ceiling pole (so you don’t have to use a ladder)
- Duct tape

1. Tape the magnet to one end of the pole with one of the 3.18 mm (1/8 in.) edges facing up.

   CAUTION: If you have a suspended ceiling, tape the magnet securely to avoid it coming loose and sticking to a ceiling support grid.

2. Ensure that the microphone is powered on.
3. Locate the factory reset sensor.

   Looking at the bottom edge of the microphone connector along a longer side of the electronics enclosure, the sensor is approximately 63.5 mm (2.5 in.) towards the end opposite to the enclosure’s RJ-45 connector.

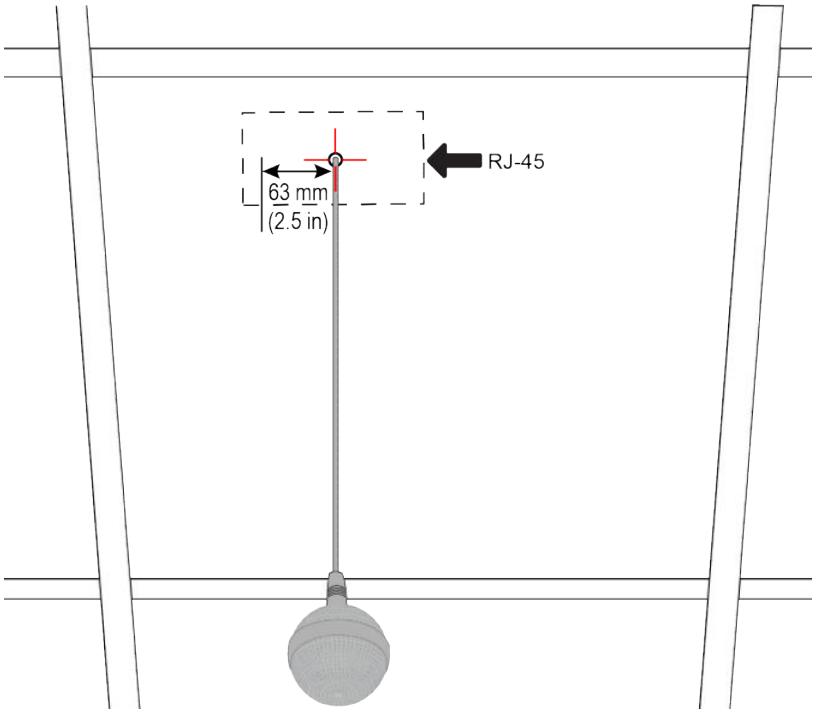

If you can't see the RJ-45 connector, look for the small black button on the microphone cable. Facing that button at the 12 o'clock position, the sensor is located toward the 9 o'clock position.

4. Line up the center of the magnet with the sensor and hold it no more than 19 mm (3/4 in.) away from the enclosure for approximately 7 seconds.

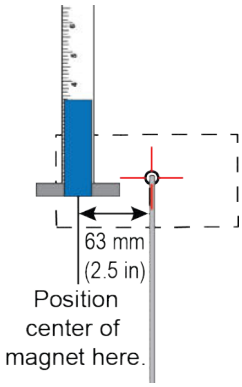

The microphone LED blinks amber during a factory restore.

NOTE: Don't power off the microphone during this process. It restarts when complete.

Factory Restore a Microphone Adapter

If your microphone adapter isn't functioning correctly, you might need to factory restore it. A factory restore completely erases the microphone adapter's flash memory and restores it to the latest major software version (x.0).

The factory restore button is on the side of the microphone adapter.

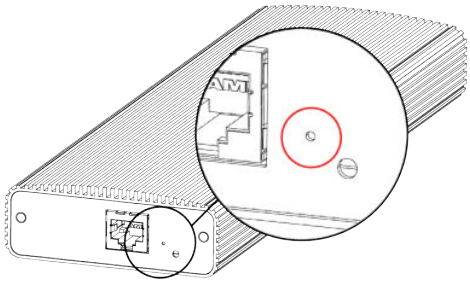

1. Disconnect the power supply to turn off the microphone adapter.
2. **Optional for USB flash drive method**: Download the software package you want to install from Polycom Support and save the package to the root directory of a USB flash drive. Insert the USB flash drive into a USB port.

   NOTE: Poly recommends formatting your USB flash drive with the FAT32 file system.

3. Insert a straightened paper clip through the factory restore button pinhole.
4. While continuing to hold the restore button, reconnect the power supply to turn the microphone adapter on.
5. Hold the restore button for 10 more seconds, then release it.

   The microphone adapter LED blinks green and blue during a factory restore.

   NOTE: Don’t power off the microphone adapter during this process. It restarts when complete.

18 Diagnostic Functions

Poly G7500 and Studio X systems provide multiple diagnostic features for testing audio, networking, call experience, and collecting logs.

Import an audio Configuration file supplied by Poly support

If you experience system audio issues, your Poly support team may provide an audio Configuration file and ask that you import it to your system.

Your Poly support team provides and manages the content of the audio Configuration file. Poly recommends that you don't make your own adjustments to the file.

NOTE: You must have the system USB ports enabled on the system.

1. Add the audio Configuration file supplied by Poly to a USB flash drive formatted to FAT32.
2. Connect the USB flash drive to a USB-A port on the system.
3. In the system web interface, go to **Audio / Video** > **Audio**.
4. Under **Audio Configurations**, select **Import**.
5. The system imports the audio Configuration file, applies the configuration, and reboots.

Audio Tests

You can test your system speakers and audio levels.

In Poly Video Mode, you can test your Polycom StereoSurround setup.

Test Speakers

Verify that you correctly connected the speakers to your Poly G7500, Poly Studio G62, and Poly Studio X series system.

You must enable Polycom StereoSurround to test both speakers at once.

The following setups don't support stereo audio:

- Standalone Studio X30 systems
- G7500 and Studio X Family systems paired with Poly Trio systems

1. In the system web interface, go to **Diagnostics** > **Audio Test**.
2. Do one of the following:
   - Select **Start**.
   - Select **Left** to test the left speaker.
   - Select **Right** to test the right speaker.
   - Select **Both** to test both speakers (if you enable Polycom StereoSurround).

   If you run a test during a call, people on the far site also hear the test tone.

A 473 Hz tone indicates that the local audio connections are correct.

Test Audio Levels

Audio meters show you real-time audio input and output signals for your Poly G7500, Poly Studio G62, and Poly Studio X series system, including microphones, far-site audio, and other connected audio devices.

1. Do one of the following:
   - In the system web interface, go to **Diagnostics** > **Audio Tests** > **Audio Meters**.
   - In the local interface, go to **Settings** > **System Information** > **Diagnostics** > **Audio Meter**.
2. To test the audio levels, do one of the following:
   - To check the near-site audio, speak into your microphones.
   - To check the far-site audio, ask a call participant to speak or call a phone in the far-site room to hear it ring.

   Occasional peaks of +12 dB to +16 dB with loud transient noises are acceptable. If you see +20 on the audio meter, the audio signal is 0 dBFS and the audio might be distorted. A meter reading of +20dB corresponds to 0dBFS in the room system audio. A signal at this level is likely clipping the audio system.

Test Polycom StereoSurround

After you configure the Poly G7500, Poly Studio G62, and Poly Studio X series system to use Polycom StereoSurround, you can place a test call to see if it works.

Make sure the microphones are positioned correctly.

The following setups don't support stereo audio:

- Standalone Studio X30 systems
- G7500 and Studio X Family systems paired with Poly Trio systems

1. In the system web interface, go to **Audio/Video** > **Audio** > **Audio Input**.
2. Gently blow on the left and right leg of each microphone while watching the audio meters to identify the left and right inputs.
3. Test the speakers to check volume and verify that audio cables are connected.

   If the system is in a call, the far site hears the tone.
4. **Optional:** Exchange the right and left speakers if they are reversed.
5. Adjust the volume control on your external audio amplifier so that the test tone sounds as loud as a person speaking in the room. If you use a Sound Pressure Level (SPL) meter, it should measure approximately 80 to 90 dBA in the middle of the room.
6. Repeat these steps for **Audio Output**.

Check Provisioning Results

To verify your settings are provisioned the way you want, you can see if the configuration parameters were applied successfully to your system.

Make sure your system is registered with a provisioning service, such as Poly Clariti Manager.

1. In the system web interface, go to **Servers** > **Provisioning Server**.
2. Select **Show Results** and verify if parameters applied successfully the last time you provisioned your system.

   The **Result** column displays one of the following statuses:

   - **SUCCESS**: The parameter was applied.
   - **IGNORED**: The parameter didn't apply because a configuration that controls this feature is disabled, not applicable, or wasn't provisioned.
   - **FAILURE**: If you see this, the **Error Message** column can help you identify the issue.

For a list of available system parameters and their permitted values, see the Poly VideoOS Configuration Parameters Reference Guide.

Checking System Status

You can verify the status of your Poly G7500, Poly Studio G62, and Poly Studio X series system in the local and system web interfaces. Status information also include details about connected devices and system services.

The system displays statuses using three colors:

- Green indicates the device or service is working or registered
- Red indicates an alert
- Gray indicates the device or service is unavailable or unregistered

Some statuses are available only after you connect the corresponding device, such as a camera, to the system.

Check Status in the Local Interface

Verify your Poly G7500, Poly Studio G62, and Poly Studio X series system status in the local interface.

1. Do one of the following:
   - In a call: **Menu** > **More** > **Settings** > **Status**.
   - Out of a call: **Menu** > **Settings** > **Status**.
2. View a system status page:

   You must enter the system's local administrator credentials to access status pages displaying a **Lock** .

   Table 18-1

Setting	Description
Active Alerts	Displays the status of any device or service with an error status. If there's an alert, an **Alert** displays next to the system time.
Call Control	Displays status of the **Auto-Answer Point-to-Point Video** setting.
LAN Properties	Displays network connection status.
Servers	• Displays the gatekeeper and SIP registrar server status. • Displays the active global directory server or LDAP server status. • Displays the provisioning or calendaring service status (if enabled).
Peripheral Devices	Connection status of peripheral devices.

Check Status in the System Web Interface

Verify your Poly G7500, Poly Studio G62, and Poly Studio X series system status in the system web interface.

1. In the system web interface, go to **Diagnostics** > **System Status**.
2. **Optional:** Select **Details** next to each device or service for more information.
3. **Optional:** Select **Adjust <Feature> Settings** to access the corresponding settings page.

Checking the Web Proxy Configuration

If you experience issues with your automatic or semi-automatic web proxy configuration, check the status and contents of your proxy auto-configuration (PAC) file.

For manual configurations, verify that the information you used to connect your system to the proxy is accurate.

PAC File Status

Your Poly G7500, Poly Studio G62, and Poly Studio X series system displays the status of the proxy auto-configuration (PAC) file used for web proxy communication. See the following table for more information about these statuses, which you see on the **Web Proxy Settings** page of the system web interface.

Table 18-2 PAC File Status

Status	Description
Success	File successfully downloaded to your system.
In Progress	File is downloading to your system.
WPAD Failed	File download URL wasn't discovered using DHCP option 252.
Download Failed	File didn't download.
Expired	File is expired.

Verify the PAC File Contents

You can check the contents of the PAC file on your Poly G7500, Poly Studio G62, and Poly Studio X series system.

1. In the system web interface, go to **Network** > **LAN Network** > **Web Proxy Settings**.
2. Select **Download PAC File**.

   This option isn't available if the **PAC File Status** doesn't indicate **Success**.

Logs

Logs contain information about system activities and configurations to help you troubleshoot issues.

NOTE: If your system experiences a sudden loss of power, your system loses all logs since the last system reboot or log download.

Consolidated System and Peripheral Device Logs

Event information about your system and some of its connected devices are available in a single log package.

NOTE: The system logs report that the system reaches out to https://update.googleapis.com for Chromium updates. The system doesn't exchange information with this URL, and no download or update occurs. You can ignore this message or block the URL on your network.

The system log package includes details about the following devices:

- Cameras (see your video system's latest *Release Notes* for supported models)
- Poly TC10 device
- Poly TC8 device
- Poly Trio system (see your video system's latest *Release Notes* for supported models)
- Poly IP Table Microphone (Poly Studio G62 and Poly G7500 only)
- Poly IP Ceiling Microphone (Poly Studio G62 and Poly G7500 only)
- Poly Microphone IP Adapter (G7500 only)

Configure Log Preferences

You can manage some basic aspects of your Poly G7500, Poly Studio G62, and Poly Studio X series system logs, including how logs are transferred to a USB flash drive.

Your system has limited storage space for logs. If you want logs to be overwritten less frequently, attach a USB flash drive to the system.

When the Poly G7500, Poly Studio G62, and Poly Studio X series system log fills past your configured threshold, the system triggers the following actions:

- Transfers the log to a USB flash drive if you set **Transfer Frequency** to **Auto At Threshold**.
- Creates a log entry indicating that the system reached the threshold.

1. In the system web interface, go to **Diagnostics** > **Logs** > **Log Management**.
2. Configure the following settings:

Table 18-3 Log settings

Setting	Description
Current Percent Filled	Displays as a percentage how full the logs are. When the logs are full, system deletes the oldest entries.

Table 18-3 Log settings (continued)

Setting	Description
Percent Filled Threshold	Reaching the threshold you configure here creates a log entry and automatically transfers logs if you set **Transfer Frequency** to **Auto At Threshold**.
Folder Name	Specifies the folder name for log transfers. Select one of the following: • **System Name and Timestamp**: Folder name is the system name and the timestamp of the log transfer. For example, if the system name is `Marketing`, the folder name might be `marketing_<date_and_time>`. • **Timestamp**: Folder name is the timestamp of the log transfer (for example, `<yyyyMMddhhmmssSSS>`). • **Custom**: Lets you specify a folder name for manual log transfers.
Storage Type	Specifies the type of storage device used for log file transfers.
Transfer Frequency	Specifies when the system transfers logs: • **Manual**: The transfer starts when you select the **Start** button, which is visible only in the local interface. If the log fills before you transfer, new events overwrite the oldest events. • **Auto at Threshold**: The transfer starts automatically when the system reaches the **Percent Filled Threshold**.

3. Select **Save**.

Configure Log Level

You can determine how much detail you want in your Poly G7500, Poly Studio G62, and Poly Studio X series system logs.

1. In the system web interface, go to **Diagnostics** > **Logs** > **System Log Settings**.

2. Configure the following settings:

Table 18-4 Log Level Settings

Setting	Description
Log Level	Sets the minimum log level of messages stored in the system's flash memory. Poly recommends that you use the default value. When you enable remote logging, the log level is the same for both remote and local logging. Set one of the following log levels. Poly recommends that you enable automatic transfer of logs to a USB flash drive when using one of these setting. • **Debug**: Logs all messages. • **Info** • **Warning** • **Critical**: Logs the fewest number of messages
Enable H.323 Trace	Logs additional H.323 connectivity information. Poly recommends that you enable automatic transfer of logs to a USB flash drive when using this setting.
Enable SIP Trace	Logs additional SIP connectivity information. Poly recommends that you enable automatic transfer of logs to a USB flash drive when using this setting.

3. Select **Save**.

Retrieve Log Files

You can use the web interface to download log files to a location on your computer

Wake the system before retrieving log files.

NOTE: The date and time of the system log entries for Poly G7500, Poly Studio G62, and Poly Studio X series and Poly Studio V72 devices are shown in GMT.

1. Access the web interface by opening a web browser and entering the IP address of the Poly G7500, Poly Studio G62, and Poly Studio X series and Poly Studio V72 system using the format https://IPaddress (for example, https://10.11.12.13), and go to **Diagnostics > Logs**.

2. Select **Download system logs**. A dialog window opens for you to specify how you want to open or save the .tgz file.

Transfer Logs to a USB Flash Drive

You can transfer logs to a USB flash drive to free up space on your Poly G7500, Poly Studio G62, and Poly Studio X series system.

NOTE: Poly recommends formatting your USB flash drive with the FAT32 file system.

1. In the local interface, go to **Menu** ≡ > **Settings** ⚙ > **Diagnostics**.

2. Select **Log Management** and enter the system's local administrator credentials.

3. Select **Start**.

> **NOTE:** Wait until the system displays a message that the log transfer has completed successfully before you remove the USB flash drive.

The system saves a file in the USB flash drive named according to the settings in the system web interface.

Configure Remote Logging

You can configure your Poly G7500, Poly Studio G62, and Poly Studio X series system to send the event details it collects to a remote logging server (using syslog or a similar mechanism).

Remember the following about remote logging with your system:

- The system sends logs to remote logging servers over a secure TLS connection. Your system may use a version of TLS that you configured your system not to use. This happens because your system sends logs using the TLS version configured on your remote logging server. This doesn't affect the use of the configured TLS version for other parts of your system. For example, if you set your system's minimum version of TLS to 1.2, but the server only uses 1.0, it still receives the logs.
- You can use more than one remote logging server.
- Logs can be consumed by an intrusion detection system (IDS) and a security information and event management (SIEM) system.

1. In the system web interface, go to **Diagnostics** > **Logs**.
2. Configure the following settings:

Table 18-5 **Log settings**

Setting	Description
Enable Remote Logging	Specifies whether remote logging is enabled. Enabling this setting causes the system to send each log message to the specified server. The system immediately begins forwarding its log messages after you click **Save**. The system supports remote logging encryption using TLS. If you use UDP or TCP transport, Poly recommends remote logging only on secure, local networks.

Table 18-5 Log settings (continued)

Setting	Description
Remote Log Server Address	Specifies the server address and port. If you don't specify the port, the system uses a default destination port. The system determines the default port by how you configure **Remote Log Server Transport Protocol**: • UDP: 514 • TCP: 601 • TLS: 6514 Specifies the address and port in the following formats: • IPv4 address: `192.0.2.0:<port>`, where *<port>* is the elective destination port number in the 1-65535 range. • FQDN: `logserverhost.company.com:<port>`, where *<port>* is the elective destination port number in the 1-65535 range.
Remote Log Server Transport Protocol	Specifies the transport protocol for sending logs to a remote server: • UDP • TCP • TLS (secure connection)

3. Select **Save**.

Configure Logging to System Internal Storage

Enable logging to the system's internal storage to help troubleshoot critical issues that are causing normal logging operations to fail.

CAUTION: Poly recommends logging to the system's internal storage only when tracking critical issues. Enabling for extended periods of time causes wear on the system's storage and may cause the system to fail.

1. In the system web interface, go to **Diagnostics** > **Logs** > **System Log Settings**.
2. Select the **Save Logs to Internal Storage** check box.

IMPORTANT: The system saves logs to the internal storage for 2 weeks. After 2 weeks, the system reverts to the previously configured logging method and deletes the logs in the internal storage. Download the logs before the time expires.

3. Select **Save**.

Sample Log File

The following code shows examples from a system log file.

```
Login:2020-05-07 19:06:36.526 DEBUG SecurityService: SecurityService:
securityserviceproto.cpp SecurityServiceCreateSessionRequest
clienttype: 3 location: 192.168.137.1 clientName: Mozilla/5.0
(Windows NT 10.0; Win64; x64) AppleWebKit/537.36 (KHTML, like
Gecko) Chrome/81.0.4044.129 Safari/537.36 request: clienttype:
kWeb2020-05-07 19:06:36.526 DEBUG SecurityService: SecurityService:
createSession ClientType is 3 location: 192.168.137.1 name:Mozilla/5.0
(Windows NT 10.0; Win64; x64) AppleWebKit/537.36 (KHTML, like
Gecko) Chrome/81.0.4044.129 Safari/537.362020-05-07 19:06:36.526
DEBUG SecurityService: SecurityService: In createSession
sessionId=PSLgZBGvGw7I2020-05-07 19:06:36.526 DEBUG SecurityService:
SecurityService: createSession The password is not empty, setting
the user as anonymous2020-05-07 19:06:36.526 DEBUG SecurityService:
SecurityService: updateSessionCount: Increment session count for
client type '3' to 12020-05-07 19:06:36.526 DEBUG SecurityService:
SecurityService: SessionAddNtfy: len 2682020-05-07 19:06:36.526 DEBUG
SecurityService: SecurityService: SecurityServiceSendNotification():
finished sending the notification, msg_sendnotification() returned
02020-05-07 19:06:36.533 DEBUG SecurityService: SecurityService:
SecurityServiceLoginRequest(): username: admin2020-05-07 19:06:36.533
DEBUG SecurityService: SecurityService: login2020-05-07 19:06:36.533
DEBUG SecurityService: SecurityService: LocalAuthenticator::login,
role 3 loginSuccess 12020-05-07 19:06:36.535 DEBUG SecurityService:
SecurityService: SessionStateNtfy: len 692020-05-07 19:06:36.535 DEBUG
SecurityService: SecurityService: SecurityServiceSendNotification():
finished sending the notification, msg_sendnotification()
returned 02020-05-07 19:06:36.535 DEBUG SecurityService:
SecurityService: getPwdStatusAux password can not expire node
security.authentication.accounts.adminremote.passwordpolicy2020-05-07
19:06:36.535 DEBUG SecurityService: SecurityService: login
login, pwStatus 22020-05-07 19:06:36.535 DEBUG SecurityService:
SecurityService: setCurrentLoginInfo set login status: lastLoginTime
1588877728, lastClientType 3, lastClient 192.168.137.1,
failedLogins 02020-05-07 19:06:36.536 DEBUG SecurityService:
SecurityService: setSuccessfulLoginInfoToConfig successful login,
current time 15888783962020-05-07 19:06:36.537 DEBUG SecurityService:
SecurityService: LoginNtfy: len 302020-05-07 19:06:36.537 DEBUG
SecurityService: SecurityService: SecurityServiceSendNotification():
finished sending the notification, msg_sendnotification() returned
02020-05-07 19:06:36.537 DEBUG SecurityService: SecurityService:
securityserviceproto.cpp SecurityIFLoginStatusPackLogout:2020-05-07
19:17:29.313 DEBUG SecurityService: AuthenticationManager:
AuthenticationManager::logout(): username: admin2020-05-07
19:17:29.313 DEBUG SecurityService: SecurityService: LogoutNtfy: len
212020-05-07 19:17:29.313 DEBUG SecurityService: SecurityService:
SecurityServiceSendNotification(): finished sending the notification,
msg_sendnotification() returned 02020-05-07 19:17:29.313 DEBUG
SecurityService: SessionManager: deleteItem(): deleting the
session PSllKtLtRoFp2020-05-07 19:17:29.313 DEBUG SecurityService:
SecurityService: updateSessionCount: Decrement session count
for client type '3' to 02020-05-07 19:17:29.313
```

```
DEBUG SecurityService: SecurityService: SessionDeleteNtfy: len
522020-05-07 19:17:29.313 DEBUG SecurityService: SecurityService:
SecurityServiceSendNotification(): finished sending the notification,
msg_sendnotification() returned 02020-05-07 19:17:29.313
DEBUG SecurityService: SecurityService: securityserviceproto.cpp
errorResponsePack
```

Run a Trace Route

You can run a trace route to identify network connectivity issues with your Poly G7500, Poly Studio G62, and Poly Studio X series system.

This test isn't available on the TC8, TC10, or the system web interface.

1. In the local interface, go to **Menu Settings Diagnostics**.
2. Go to **Trace Route**.
3. Enter the IP address or URL with which to run the trace route.
4. Select **Start**.

If the test is successful, the hops between your system and the specified destination display.

SNMP Reporting

The Poly G7500, Poly Studio G62, and Poly Studio X series system supports SNMP versions 1, 2c, and 3.

SNMP can provide the following event information about your system:

- Alert conditions located on the system alert screen
- Details of jitter, latency, and packet loss
- Low battery power in the remote control
- System power on
- Successful or unsuccessful administrator login
- Call fail for a reason other than a busy line
- User help request
- Video or audio call connection or disconnection

NOTE: Poly doesn't support SNMP write operations for configuring or provisioning systems.

SNMPv3 does the following:

- Provides secure connections between the SNMP manager and agent
- Supports IPv4 networks
- Logs all configuration change events
- Supports a user-based security model
- Supports trap destination addresses

Configure SNMP

You can monitor your Poly G7500, Poly Studio G62, and Poly Studio X series system remotely with SNMP.

NOTE: The automatically generated ID is based on the recommended algorithm from RFC 3411, using eth0/wired MAC address

1. In the system web interface, go to **Servers** > **SNMP**.
2. Configure the following settings:

Table 18-6 **SNMP settings**

Setting	Description
Enable SNMP	Enables administrators to monitor the system remotely using SNMP.
Enable Notifications	Enables MIB notifications.

Table 18-6 SNMP settings (continued)

Setting	Description
Version1	Enables your system to use the SNMPv1 protocol. Due to security issues, Poly recommends that you don't enable this setting.
Version2c	Enables your system to use the SNMPv2c protocol. Due to security issues, Poly recommends that you don't enable this setting.
Version3	Enables your system to use the SNMPv3 protocol. Enabled by default, you can't configure other SNMPv3 settings unless this is on.
Read-Only Community	Specifies the SNMP community string for your system. For security reasons, don't use the default community string (`public`). NOTE: Poly doesn't support SNMP write operations for configuring or provisioning systems. The community string is for read operations and outgoing SNMP traps. NOTE: For SNMPv3, if your SNMP utility prompts for a context name, enter the Read-Only Community name.
Contact Name	Specifies the name of the person responsible for remotely managing the system.
Location Name	Specifies the system location.
System Description	Provides details about the system.
User Name	Specifies the User Security Model (USM) account name for SNMPv3 message transactions. The maximum length is 64 characters.
Authentication Algorithm	Specifies the type of SNMPv3 authentication algorithm used. • **SHA** • **MD5**
Authentication Password	Specifies the SNMPv3 authentication password. The maximum length is 48 characters.

Table 18-6 SNMP settings (continued)

Setting	Description
Privacy Algorithm	Specifies the cryptographic privacy algorithm for SNMPv3 packets. • **CFB-AES128** • **CBC-DES**
Privacy Password	Specifies the SNMPv3 privacy (encryption) password. The maximum length is 48 characters.
Engine ID	NOTE: The automatically generated ID is based on the devices eth0/wired MAC address as recommended in RFC 3411. For more information, see RFC 3411. Specifies the unique ID of the SNMPv3 engine. You might need this information to match the configuration of an SNMP console application. The ID is automatically generated, but you can create your own as long as it is between 10 and 32 hexadecimal digits. You can separate each group of two hex digits by a colon (:) to form a full 8-bit value. A single hex digit delimited on each side with a colon is equivalent to the same hex digit with a leading zero (for example, `:F:` is equivalent to `:0f:`). The ID can't be all zeros or Fs.
Listening Port	Specifies the port SNMP uses to listen for system messages (the default is port 161).
Transport Protocol	Specifies the transport protocol used. • **TCP** • **UDP**
Destination Address1 Destination Address2 Destination Address3	Specifies the IP addresses of SNMP managers where SNMP traps are sent. Each address has four settings: • Server address (accepts IPv4 addresses, hostnames, and FQDNs) • Message type (**Trap** or **Inform**) • Protocol (SNMP **v1**, **v2c**, or **v3**) • Port where SNMP traps are sent (default is **162**)

3. Select **Save**.

Download MIBs

You can download MIB data for your Poly G7500, Poly Studio G62, and Poly Studio X series system.

A MIB helps your SNMP management console resolve SNMP traps and provide human-readable descriptions of those traps.

1. In the system web interface, go to **Servers** > **SNMP**.
2. Select **Download MIB**.

Test the Call Experience

Run a near end loop test to verify what others see and hear in a call with your Poly G7500, Poly Studio G62, and Poly Studio X series system.

This test isn't available in a call, on the TC8, TC10, or the system web interface.

1. In the local interface, go to **Menu Settings Diagnostics**.
2. Go to **Near End Loop**.
3. Select **Start**.

Monitor 1 displays the video and plays the audio sent to a far site during a call.

Test Connection with Another System

With a ping test, you can check if your Poly G7500, Poly Studio G62, and Poly Studio X series system can call another system.

This test isn't available on the TC8, TC10, or the system web interface.

1. In the local interface, go to **Menu Settings Diagnostics**.
2. Go to **Ping**.
3. Enter the IP address or URL of the system you want to call.
4. Select **Start**.

If the test is successful, an abbreviated Internet Control Message Protocol (ICMP) message displays. You see H.323 or SIP information depending on how the far-site system is configured.

View Call Statistics

You can look at in-call data to help you troubleshoot system issues or problems experienced by call participants.

1. In the system web interface, go to **Diagnostics**.
2. Go to **Call Statistics**.

   If you're in a call, a link to call statistics is also available on the **Dashboard** and **Active Call** page.

   A list of participants displays, including their names, numbers, and the quality of their connections.

3. Select the participant you want to see more call information about.

   The following additional details about the participant display:

   - System or application the participant is using
   - Call type
   - Call speed
   - Encryption status
   - Call streams (for your system and the participant)

     Depending on the nature of your call, you may also see the transmitted and received streams of audio, video, and content.

4. **Optional:** Select a call stream for additional information.

   The following additional details about the stream display:

   - Stream type
   - Stream quality
   - Protocol used
   - Format (may not display on some mobile devices)
   - Rate used
   - Frame rate
   - Packets lost
   - Packet loss percentage
   - Jitter
   - Error concealment

Verify Poly Lens Registration Status

You can check if your system is registered with Poly Lens.

- In the system web interface, go to **Servers** > **Cloud** to check the **Registration Status**.

19 Troubleshooting

Refer to the following topics to help you diagnose and fix problems while using your Poly G7500, Poly Studio G62, and Poly Studio X series system.

Audio Issues

If you're having issues with audio or audio peripherals, refer to the following topics for guidance.

Poly Trio Audio Meter Not Displaying in System Web Interface

You can't see the audio meter for paired Poly Trio microphones in the system web interface. However, you can still see the audio meter in the local interface.

- Reset the system and pair the Poly Trio.

Fix Polycom Acoustic Fence Issues with G7500

If you’re using Polycom Acoustic Fence technology with your G7500 system and notice it isn’t working, you may have to reconnect your microphones.

1. Disconnect all microphones from the **LLN** ports on the back of your system.
2. Reconnect the microphones (connect the primary microphone first).

Camera Issues

If you're having issues with built-in or connected cameras, refer to the following topics for guidance.

A Portion of the EagleEye Cube USB Camera Name Is Cut Off

Names created using the Polycom Companion app can be up to 60 characters long, but your system cuts off the name after 32 characters.

- Use a camera name that isn't longer than 32 characters.

G7500 Loses Connection to a Connected Studio E70 Camera

Power cycling a Studio E70 may resolve a connection issue.

A G7500 loses connectivity to a connected Studio E70 camera.

Do one of the following:

1. If using PoE to power the Studio E70, disconnect and reconnect the Ethernet cable.
2. Disconnect and reconnect the Studio E70 power adapter.

After the Studio E70 powers on, the G7500 reports the Studio E70 as connected under **Connected Devices** in the system web interface.

Lighting Conditions Impact Picture Quality

When using the system in a personal environment, where lighting may not be optimal, the picture quality is impacted. When the room lighting is lower than 200 lux, you may see video noise in the video sent from Poly Studio X72, Poly Studio X70, Poly Studio X52, Poly Studio X50, or Poly Studio X30 systems.

The default video input settings are tuned for well-lit office environments.

Adjust the camera settings in the system web interface. Each environment differs; the amount you adjust the brightness and sharpness depends on your unique lighting and placement situations.

1. In the system web interface, go to **Audio/Video > Video Inputs**.
2. From the list of inputs, adjust the camera's **Brightness** slider.

   Increase brightness in low light environments and decrease brightness in environments with strong single sources of light.

   NOTE: Increasing and decreasing the brightness may cause you to lose fine detail in areas with excess lighting or shadows.

3. Adjust the **Sharpness** slider.

   Increasing the sharpness provides more detail.

4. Adjust the **Color Saturation** slider.

   Increasing the color saturation can correct washed out colors in low light situations.

5. Select **Save**.

Presenter Tracking Takes Longer Than Expected or Doesn't Identify a Presenter

On a Studio X50 or Studio X30 system, you set camera tracking to **Presenter Tracking**, but the camera doesn't identify and track the speaker during a meeting.

If the active speaker is standing directly in front of the camera at the start of a meeting, the camera may not identify that someone is speaking.

- Do one of the following:
  - In the system web interface, select **Frame Speaker** or **Frame Group**.
  - Turn off camera tracking and use the manual controls.

Studio X30 Doesn't Update the Displayed Video Orientation

After switching the Studio X30 orientation in the system web interface from **Inverted** to **Normal**, the Studio X30 video feed remains inverted.

After changing the Studio X30 mounting orientation from up-side-down to right-side-up, you change the orientation in the system web interface, but the video feed is upside down.

1. In the system web interface, go to **Audio/Video** > **Video Inputs**.
2. Locate the **Studio X30** and change the orientation from **Inverted** to **Normal**.
3. Select **Save**.
4. Go to **Diagnostics** > **System Reset** and select **Restart**.

   The video feed returns to normal orientation.

System Web Interface Is Displaying Invalid or Disabled Camera Settings

If you've provisioned a USB camera with your system, you must disable provisioning before removing the camera. If you don't disable provisioning before removing the camera, previously provisioned settings may continue to display in the system web interface and you're unable to change them.

1. Connect the USB camera that was previously provisioned to your system.
2. In the system web interface, go to **Servers** > **Provisioning Server**.
3. Clear the **Enable Provisioning** check box.
4. Select **Save**.
5. Disconnect the USB camera from your system.
6. Reenable provisioning on your system.

Content Sharing

If you're having issues with content sharing, refer to the following topic for guidance.

Can’t Use AirPlay to Share Full Screen Video From a Website or App

If you try to use AirPlay to share full screen video from a website or app on an Apple iOS device, the iOS device displays a message that the video is playing on the Poly VideoOS device, but the VideoOS device shows a black screen.

Poly VideoOS supports using AirPlay to mirror an iOS device screen but doesn’t support full screen video playback from a website or app. There’s no workaround for this issue.

General Issues

If you're having general system issues, use the following topics for guidance.

Contacts with the Same Name Don't Display in the Contact List

When uploading contacts from an XML file, the system doesn't display more than one contact with the same name even if the `uniqueid` attribute is different.

- Create contacts with unique names.

Monitor Loses Signal After Monitor Swap

Swapping a 4K monitor for a 1080p monitor while your system is asleep results in losing the monitor signal.

- Do one of the following:
  - Swap the monitor while your system isn’t sleeping.
  - Restart the system after you lose signal.

IP Devices

If you're having issues connected IP devices, refer to the following topics for guidance.

Paired IP Devices

Use the following information to troubleshoot issues with paired IP devices.

IP Device Can’t Pair to the Video System

You may notice one or both of the following depending on the device:

- After powering on the TC8 or TC10, it doesn’t automatically pair with the video system.
- You can’t manually pair the device from the **Available Devices** list in the video system web interface.

There are a few possible causes for this issue:

- Network traffic on TCP port 18888 is blocked.
- Your system and TC8 or TC10 aren't on the same VLAN.

Complete each step until the device pairs with your system:

1. Allow traffic on TCP port 18888.
2. On your TC8 or TC10, verify that the TC8 VLAN ID matches the VLAN ID on your system.

IP Device Doesn’t Display On the Available Devices List

Even though the Poly G7500, Poly Studio G62, and Poly Studio X series device you want to pair is connected to the network, you don’t see it under **Available Devices** in the video system web interface.

There are a few possible causes for this issue:

- The device and video system aren’t on the same subnet.
- The network switch isn’t allowing UDP broadcast traffic forwarded to multicast address 224.0.0.200 on port 2000.
- The device is paired with another video system.

Complete each step until you see the Poly TC10 or Poly TC8 device on the **Available Devices** list:

1. Make sure the device and video system are on the same subnet.

   If needed, work with your network administrator.
2. Allow traffic to 224.0.0.200 on UDP port 2000.
3. Make sure the device isn’t paired with another video system. If it is, unpair the device.
4. Go to **Settings** > **Reset** and select **Reset**.

   Your device resets to its default configuration settings, which unpairs it from the video system.

Paired IP Device is Disconnected

You paired a device with your video system but can't use it. On the system web interface *Device Management* page, you see that the device is **Disconnected**.

A paired device must have a **Connected** status to use. A **Disconnected** status may mean there's a physical connection issue or your device or system is malfunctioning.

Complete each step until you fix the issue.

1. Check the device's LAN cable connection.
2. Restart the device.
3. Restart the video system.
4. Make sure network traffic on TCP port 18888 is unblocked.
5. Perform a factory restore on the device.
6. Perform a factory restore on the system.

IP Device Paired to Inaccessible Video System

Your Poly G7500, Poly Studio G62, and Poly Studio X series device was paired with a video system you can no longer access (for example, the video system lost its network connection or was moved to another location). Whatever the situation, the Poly G7500, Poly Studio G62, and Poly Studio X series device screen now indicates it's waiting to pair.

The Poly TC10 or Poly TC8 device is still paired to the video system but can't connect to it.

When this happens, there's a reset button in the Poly TC10 or Poly TC8 **Settings** menu to unpair the device from the video system.

If you can eventually access the video system it was paired with, you also should unpair the device from the **Device Management** page. Otherwise, the device continues to display in the **Connected Devices** list but is **Unavailable**.

Once unpaired, you can pair the device with the same video system or another video system.

1. Go to **Settings** > **Reset** and select **Reset**.

   Your device resets to its default configuration settings, which unpairs it from the video system.

2. In the system web interface, go to **General Settings** > **Device Management**.
3. Under **Connected Devices**, find the device by its MAC address (for example, **00e0db4cf0be**) and select **Unpair**.

   The device you're unpairing should have an **Unavailable** status.

IP Audio Device is Disconnected from G7500

You paired an IP audio device with your G7500 system but can't use it. On the system web interface Device Management page, you see that the device is **Disconnected**.

A paired device must have a **Connected** status to use. A **Disconnected** status may mean there's a physical connection issue or your device or system is malfunctioning.

Reconnect cables or factory restore your hardware. Complete each step until you fix the issue.

1. Check the device LED. If it isn't blinking blue, reconnect the LAN cable to the device and system.
2. If the device is a Poly Microphone IP Adapter, also reconnect its power supply cables.
3. Perform a factory restore on the device.
4. Perform a factory restore on the system.

Paired IP Device Doesn't Complete Software Update

The paired IP microphone won't update to the latest software when performing a system update.

The IP microphone has gotten in a bad state where the configuration is preventing successful completion of a software update. Perform a factory restore on the microphone.

1. Ensure that the microphone is powered on.
2. On the back of the table microphone, insert a straightened paper clip through the factory restore pinhole.
3. Press and hold the restore button for 5 seconds, then release it and the microphone LED blinks amber.

NOTE: Don't power off the microphone during the process. It restarts when complete.

System Sleep and Wake Behavior

If you're having issues with system sleep and wake behavior, refer to the following topics for guidance.

The System Restarts When Sleeping or Waking

Your system sometimes restarts while sleeping or waking up.

This is caused by manipulating the connected HDMI output while your system is asleep. While your system is asleep, don’t change the HDMI source on your monitor, switch out HDMI cables, or turn off your monitor.

If your sleep **Display** setting is configured to **No Signal**, try the following to avoid these issues:

- Turn off the input auto-select feature on your monitor.
- Set the sleep **Display** setting to **Black**.
- Disable sleep mode on your system by setting **Time Before System Goes to Sleep** to **Off**.

Monitor Doesn't Fully Wake from Sleep with CEC Enabled

Enabling Consumer Electronics Control (CEC) can result in odd monitor wake from sleep behavior.

Enabling CEC can result in odd behavior after you wake the system from sleep, including:

- The monitor displays the PIP video feed but the home screen appears black
- The monitor doesn't wake from sleep

Enabling CEC or the monitor's CEC configuration can cause this issue. The recommended workaround is to disable CEC on your video system.

1. Enter the IP address of the video system and log in as administrator.
2. Go to **Audio/Video** > **Monitors** and clear **Enable Consumer Electronics Control**.

Can’t Wake the System by Touching the Monitor

Touching the monitor doesn’t wake your Poly G7500, Poly Studio G62, and Poly Studio X series system.

If your system’s **Display** setting is on **No Signal**, your monitor may be powering down its USB ports when the system goes to sleep and disabling its touch capabilities.

1. Configure your monitor to wake when touched.
2. If your monitor doesn’t have this kind of setting, switch your system’s **Display** setting to **Black**.

Networking Issues

If you're having issues with networking, refer to the following topics for guidance.

LDAP Directory Server Ignores the Minimum TLS Version Setting

You’ve changed your Poly G7500, Poly Studio G62, and Poly Studio X series system configuration to use TLS version 1.1 at minimum, but the system still connects to your LDAP directory server with TLS 1.0.

Restart your system after configuring the **Minimum TLS Version** setting.

Studio X52 Doesn't Receive an IP Address When Connected to a Netgear Smart Switch 1G Port

In some cases, connecting a Studio X52 to a Netgear Smart Switch 1G port may result in no IP address received by the system.

After connecting your Studio X52 to your local network and powering up the system, the "No Network Detected" screen appears.

If Power Back Off (PBO) is enabled on a Netgear 1G Smart Switch port, the Studio X52 will fail to connect to the network. The PBO feature isn't supported on 1G ports and if enabled can cause this issue.

Connect the Studio X52 to a 2.5G port on the switch.

Once the system receives an IP address, setup continue. You don't need to manually restart the system.

Provisioning Issues

If you're having issues with provisioning, refer to the following topics for guidance.

Can’t Connect to Secondary Network After Changing Country Code

Changing the country code can change the Wi-Fi operating channel causing the system to be unable to connect to your wireless devices.

- In the system web interface, disable and then enable the Wi-Fi.

Poly Clariti Manager Provisioning Fails After Downgrading Software

A system provisioning with Poly Clariti Manager loses connection to the provisioning server after downgrading the software to version 3.2.1 or earlier.

The **Server Type** and **Server Address** fields changed in later releases, and don’t update correctly when downgrading software.

1. In the system web interface, go to **Servers Provisioning Servers**.
2. In the **Server Type** field, select **RealPresence Resource Manager**.
3. In the **Server Address** field, remove `https://` from the beginning of the server address and remove `/ucservice` from the end of the server address.
4. Select **Save**.

Zero Touch Onboarding Connection Fails During Initial Setup or After Reset

The system fails to connect to the Zero Touch Onboarding (ZTO) service during initial setup or after a system reset.

The system can’t communicate with the ZTO service because of a firewall and/or web proxy setting.

- Configure your firewall and/or web proxy so that the system can communicate with the ZTO service (`zto.poly.com`) on port 443.

LED Status Indicators for the System LAN Ports

You can verify network connectivity by looking at the LAN port LEDs on the back of your system.

Each LAN port has two LEDs: The left LED indicates network connectivity and traffic, while the right LED indicates Power over Ethernet (PoE) status for connected devices.

The G7500 system has four LAN ports: one for the system’s network connection (farthest left) and three link-local network (LLN) connections for peripheral devices.

Table 19-1 LED Status Indicators for the System LAN Ports

Indicator	Left LED Status (Network Traffic)	Right LED Status (Power)*
Off	No connection	No device connected
Solid green	Connected with no traffic	Connected and functioning normally
Blinking green	Connected with traffic	N/A
Solid orange	N/A	Connected but malfunctioning

* - The right LED is not used on the primary network connection port (farthest left on the back of the system).

System Update Issues

If you're having issues with system updates, refer to the following topics for guidance.

After Updating a Studio E70 Camera It Becomes Unresponsive

When updating the Studio E70, it may become stuck in device firmware upgrade (DFU) mode and become unresponsive.

Do one of the following:

- Do one of the following:
  - If using PoE to power the Studio E70, disconnect and reconnect the Ethernet cable.
  - Disconnect and reconnect the Studio E70 power adapter.

  After the Studio E70 powers on, the G7500 reports the Studio E70 as connected under Connected Devices in the system web interface.

System Doesn't Update Connected Peripherals

A G7500 or Studio X series system updates, but the system doesn't update attached peripherals.

1. Wake the system using one of the following methods:
   - Touch the screen of a paired TC10 or TC8.
   - Touch the screen of a connected touch monitor.
   - Press a button on a paired remote control.
2. Go to **System Settings** > **Device Management** and select **Update System**.
   The system updates the connected peripherals.

Recovering a System After an Unsuccessful Update to VideoOS 4.0

If you update your system to VideoOS 4.0 from a software version prior to 3.14.1, the system can become unstable or nonfunctional.

After updating your system to VideoOS 4.0, the system no longer functions correctly.

Updating your system to VideoOS 4.0 from a version prior to 3.14.1 is not a supported update path and may result in your system not functioning correctly.

1. In the system web interface, go to **Diagnostics** > **System Reset**.
2. Select **Reset All System Configurations**.
3. Select **Reset**.
   The system restarts and resets the configuration.

   If resetting the system doesn't remedy the situation, perform a pinhole factory reset.

RELATED LINKS

1.1.17.10 Factory Restore the System on page 181

Studio E70 Powered by a G7500 LLN Port Becomes Disconnected After an Update

After updating a Studio E70 camera, attached to a G7500 system, the Studio E70 LED may indicate it's no longer connected to the system.

After updating the Studio E70 camera powered by a G7500 LLN port, the Studio E70 disconnects from the system. The Studio E70 doesn't appear under **Connected Devices** in the system web interface.

Do one of the following:

- If using PoE to power the Studio E70, disconnect and reconnect the Ethernet cable.
- Disconnect and reconnect the Studio E70 power adapter.

  After the Studio E70 powers on, the G7500 reports the Studio E70 as connected under Connected Devices in the system web interface.

Studio X70 Stuck in Reboot Loop After Enabling Device Mode

On a Studio X70 system running version 3.9.1 or lower, enabling Device Mode using a provisioning profile causes the system to become stuck in a reboot loop.

This issue was fixed in VideoOS 3.10.0.

VideoOS 3.12.0 is the first version that supports Device Mode on Studio X70 systems. Enabling Device Mode on a Studio X70 running a VideoOS version earlier than 3.12.0 creates an unsupported configuration.

1. Remove the parameter `device.local.devicemode.enable="True"` from the provisioning profile.
2. Upgrade the Studio X70 to VideoOS 3.12.0 or later.
3. Add the `device.local.devicemode.enable="True"` parameter back to the provisioning profile.

   The system restarts.

Contacting Technical Support

If you're not able to make test calls successfully on your system and you've verified that the equipment is set up correctly, contact your Poly distributor or Poly Technical Support.

To contact Poly Technical Support, go to Poly Support.

Have the following information ready to help us to respond faster to your issue:

- The 14-digit serial number from the **System Detail** screen or the back of the system.
- The software version from the **System Detail** screen.
- Any active alerts generated by the system from the **System Status** screen.

Locate the System Serial Number

Use the system serial number to help technical support troubleshoot issues with your system.

The last 6-digits of the system serial number is the default system password.

- Do one of the following:
  - In the system web interface, go to **Dashboard** > **System Detail**.
  - On a paired Poly TC8 or Poly TC10 device, go to **Menu** > **Settings** > **Connected Room System**.
  - Locate the printed serial number on the bottom or rear of your system.
  - In Poly Lens, go to **Details** > **Device Information**.

20 Getting help

Poly is now a part of HP. The joining of Poly and HP paves the way for us to create the hybrid work experiences of the future. Information about Poly products has transitioned from the Poly Support site to the HP Support site.

The Poly Documentation Library is continuing to host the installation, configuration/administration, and user guides for Poly products in HTML and PDF format. In addition, the Poly Documentation Library provides Poly customers with information about the transition of Poly content from Poly Support to HP Support.

The HP Community provides additional tips and solutions from other HP product users.

HP Inc. addresses

HP US
HP Inc.
1501 Page Mill Road
Palo Alto 94304, U.S.A.
650-857-1501

HP Germany
HP Deutschland GmbH
HP HQ-TRE
71025 Boeblingen, Germany

HP UK
HP Inc UK Ltd
Regulatory Enquiries, Earley West
300 Thames Valley Park Drive
Reading, RG6 1PT
United Kingdom

Document information

Model ID: Poly Bluetooth® Remote Control (model: P010), Poly IR Receiver (model: BW7650), Poly IR Remote (model: BW7600), Poly Microphone IP Adapter (model: P012), Poly IP Table Microphone (model: P013), Poly IP Ceiling Microphone (model: P014), Poly Studio X70 (model: P026), Poly Studio X50 (model: P017), Poly Studio X30 (model: P018), Poly Studio E70 (model: P025), Poly TC10 (model: P030), Poly TC8 (model: P020), Poly Studio G62 (Radio model: PBJ-STG-62R, No radio model: PBJ-STG-62N), Poly Studio X72 (Radio model: PATX-STX-72R, No radio model: PATX-STX-72N)

Document part number: P10727-001A

Last update: November 2024

Email us at documentation.feedback@hp.com with queries or suggestions related to this document.